May 20, 1941. J. HOZA 2,243,007

APPARATUS FOR THE MANUFACTURE OF FIGURED, COVERED KNITTED FABRIC

Filed March 21, 1939

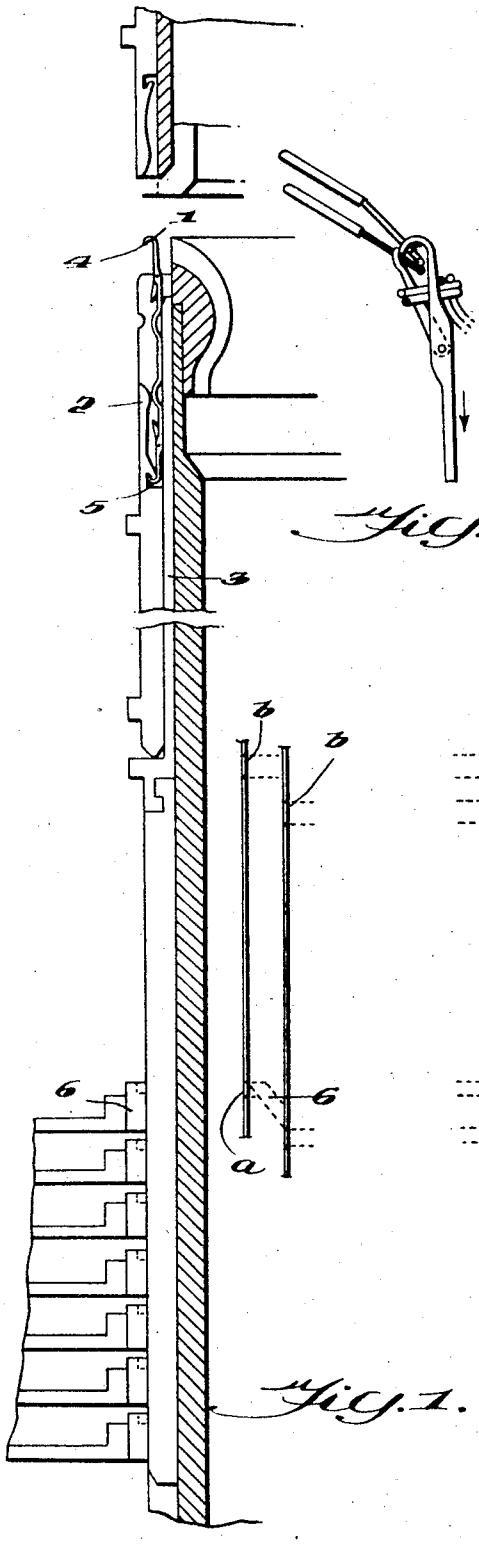

Fig. 1.

Fig. 1a.

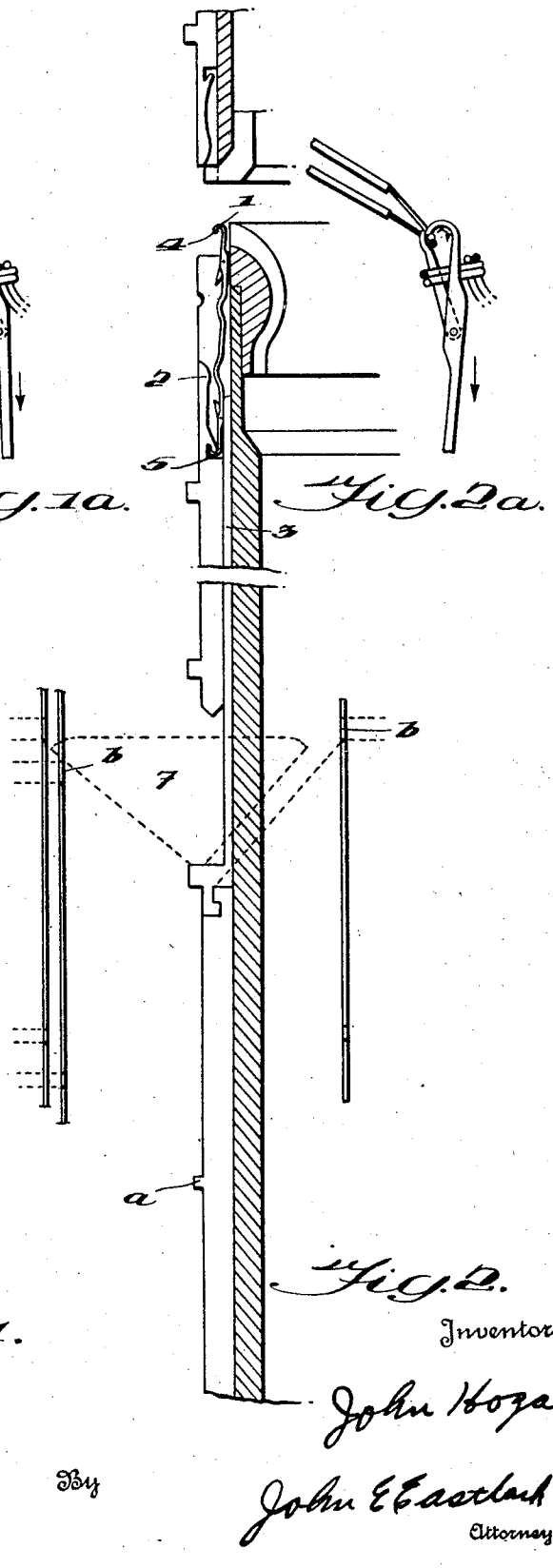

Fig. 2.

Fig. 2a.

Inventor

John Hoza

By

John E. Eastlack

Attorney

Patented May 20, 1941

2,243,007

UNITED STATES PATENT OFFICE

2,243,007

APPARATUS FOR THE MANUFACTURE OF FIGURED, COVERED KNITTED FABRIC

John Hoza, Belcamp, Md.

Application March 21, 1939, Serial No. 263,306
In Czechoslovakia March 23, 1938

4 Claims. (Cl. 66—14)

This invention relates to the manufacture of figured, covered knitted fabric and is concerned essentially with the provision of means whereby the manufacture of such fabric may be effected on two-cylinder knitting machines.

By the expression "covered fabric" is meant a fabric made from two kinds of material, either of different colour or of different origin and in which there appears on each side of the finished fabric one kind or colour of the material used therein. One such fabric is the so-called smooth covered fabric. On the other hand, by the expression "figured covered fabric" is meant a fabric in which the two materials employed, which if necessary or desirable may be of different colour, according to the pattern desired, show on the front or rear side of the product. Fabrics of this nature are also referred to as "reverse plated fabrics."

It has already been proposed to manufacture covered figured fabric by means of a single-cylinder knitting machine, but this involves the usual disadvantages of single-cylinder knitting machines, the principal one of which is the impossibility of producing ribbing. In some of these proposals relating to single cylinder machines, reverse-plated stitches were to be formed by changing the position of the needle with respect to the plane of its eye without direct action on the thread. Insofar however as reverse plating has been attempted in two cylinder machines, complicated apparatus involving the use of thread-engaging jacks has been regarded as necessary, the needles being restricted to up and down movement. The problem of adjusting the needle in the plane of its eye while moving up-and-down to co-operate alternately with the cylinders has not been satisfactorily solved.

An object of the invention is therefore to devise means whereby the needles of a two-cylinder machine may be adjusted in the plane of their respective eyes while the needles are moving between the cylinders, without jeopardising the normal operation of the machine and while avoiding complicated mechanism.

With this object in view, the invention provides in a two-cylinder knitting machine having double ended needles and grooves in the cylinders to provide guides for the needles, the needles being movable to-and-fro in their respective grooves to co-operate alternately with said cylinders; means for effecting during said to-and-fro movement an adjustment of at least one needle in the plane of its eye so as to allow the formation of reverse-plated stitches, said means comprising a slider in at least one of the grooves in which said needle moves, the slider being normally positioned between the rear of the needle and the bottom of the groove and supporting said needle, and being adapted for engagement by pattern control means so that when a reverse-plated stitch is to be formed, the slider is withdrawn partly from behind the needle so that the needle is supported in an inclined disposition partly on the slider and partly on the bottom of the groove.

The accompanying drawing illustrates by way of example a constructional embodiment of the invention in which double ended knitting needles are combined with means for effecting their inclination for the purpose of the inversion of the threads.

In the drawing:

Figure 1 illustrates the position of the needle and guide during normal knitting,

Figure 1*a* is an enlarged detail view of the needles showing the relative positions of the threads for the adjustment shown in Figure 1,

Figure 2 illustrates the needle in the tilted position to which it is moved for the purpose of permitting the required alteration of position of the rearward thread with respect to the front thread in the manufacture of a covered patterned fabric,

Figure 2*a* is an enlarged detail view of the needles showing the relative positions of the threads for the adjustment shown in Figure 2.

Referring to the drawing, the apparatus comprises a double ended needle 1, provided with small hooks 4 and 5 and supported with its rear side against a movable guide (stopper) 3.

As is evident from the drawing, the small end hooks 4 and 5 are somewhat bent forward with respect to the rear plane of the needle and in the open position of the needle the rearward inner wall of each small hook lies in a common plane with the latch in the opened position of the latter.

The guide 3 is movable within such limits that it is possible to tilt the needle to a position defined by the depth of the groove. Opposite the movable guide 3, on the other side of the needle, is a fixed guide 2 (plate). According to the knitted pattern desired, two threads are inserted in each needle which is to effect an inversion of the threads. With the normal inclination of the needle illustrated in Figures 1 and 1*a* the threads are inserted normally one behind the other, and as is evident, the dark thread (the rear one in Figure 1*a*) arrives before the light thread (the

front one in Figure 1*a*). In order to attain the position illustrated in Figures 2 and 2*a*, the guide 3 is so shifted on its base that the upper small hook 4 of the needle 1 is tilted in the direction of the cylinder. With this arrangement the mutual position of the threads is inverted upon simultaneous height movement and tilting of the needle in the direction of the cylinder, after which the guide 3 is again brought to the original position illustrated in Figure 1.

The operation of the movable guides 3 of the lock and of the needles takes place as is usual from the pattern control device arranged on the two cylinder knitting machine. Thus the guide 3 when driven upward strikes, with its knee *a* against movable locks 6. These locks lead the guide to a lower position in which it strikes with its knee *b* against the lock 7 for the lowered guide. In Figs. 1 and 2 of the drawing the guide is diagramamtically illustrated in various positions while partial developments of the locks 6 and 7 are shown in dotted lines. The movable locks are actuated by cam drums in the usual way.

I claim:

1. In a two-cylinder knitting machine having double ended needles and grooves in the cylinders to provide guides for the needles, the needles being movable to-and-fro in their respective grooves to co-operate alternately with said cylinders; means for effecting during said to-and-fro movement an adjustment of at least one needle in the plane of its eye so as to allow the formation of reverse-plated stitches, said means comprising a slider in one of the grooves in which said needle moves, the slider being normally positioned between the rear of the needle and the bottom of the groove and supporting said needle, and being adapted for engagement by pattern control means so that when a reverse-plated stitch is to be formed, the slider is withdrawn partly from behind the needle so that the needle is supported in an inclined disposition partly on the slider and partly on the bottom of the groove.

2. In a two-cylinder knitting machine having double ended needles and grooves in the cylinders to provide guides for the needles, the needles being movable to-and-fro in their respective grooves to co-operate alternately with said cylinders; means for effecting during said to-and-fro movement an adjustment of at least one needle in the plane of its eye so as to allow the formation of reverse-plated stitches, said means comprising a slider in one of the grooves in which said needle moves, the slider being normally positioned between the rear of the needle and the bottom of the groove and supporting said needle, and being adapted for engagement by pattern control means so that when a reverse-plated stitch is to be formed, the slider is withdrawn partly from behind the needle so that the needle is supported in an inclined disposition partly on the slider and partly on the bottom of the groove, and said needles being constructed so that the rear inner side of the hook and the latch lie in a single plane in the unlatched position of the needles.

3. In a two-cylinder knitting machine having double ended needles, grooves in the cylinder providing guides for the needles, and control elements in said grooves for moving the needles to-and-fro, said control elements having abutments to engage the hooks at the respective ends of the needles to allow to-and-fro movement to be imparted by the control elements to the needles; means for effecting an adjustment of at least one needle in the plane of its eye so as to allow the formation of reverse-plated stitches, said means comprising a slider in one of the grooves in which said needle moves, the slider being positioned between the needle-control element and the bottom of the groove and forming a support for said control element, and normally projecting so as to lie between the rear of the needle and the bottom of the groove and support said needle, and pattern control means operating on the slider so as to withdraw it partly from behind the needle, when a reverse-plated stitch is to be formed and thereby cause the needle to hinge on the control-element abutment that is engaged by the needle-eye until the needle rests, in an inclined disposition, partly supported by the bottom of the groove.

4. In a two-cylinder knitting machine having double ended needles, grooves in the cylinders providing guides for the needles, and control elements in said grooves for moving the needles to-and-fro, said control elements having abutments to engage the hooks at the respective ends of the needles to allow to-and-fro movement to be imparted by the control elements to the needles, means for effecting an adjustment of at least one needle in the plane of its eye so as to allow the formation of reverse-plated stitches, said means comprising a slider in one of the grooves in which said needle moves, the slider resting throughout its length on the bottom of the groove and being positioned between the needle-control element and the bottom of the groove and forming a support for said control element, and normally projecting so as to lie between the rear of the needles and the bottom of the groove and support said needle, and pattern control means operating on the slider, which remains resting throughout its length on the bottom of the groove, so as to withdraw the slider partly from behind the needle when a reverse-plated stitch is to be formed and cause the needle to hinge on the abutment on the control element that is engaged by the needle-eye until it rests, in an inclined disposition, partly supported by the bottom of the groove.

JOHN HOZA.