(No Model.) 4 Sheets—Sheet 1.

H. BLACKMAN.

APPARATUS FOR RECOVERING ALKALI.

No. 492,382. Patented Feb. 28, 1893.

FIG. 1.

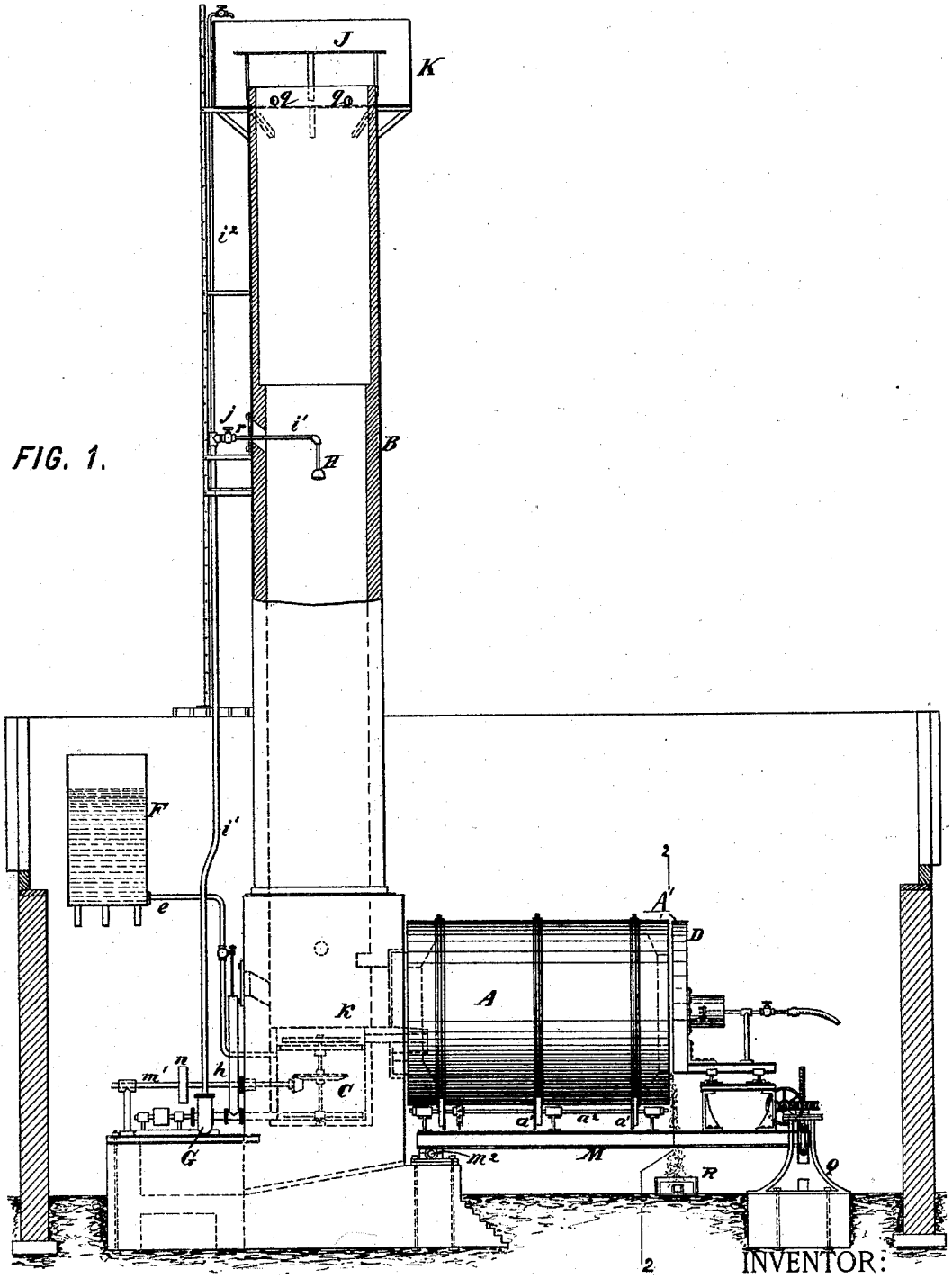

WITNESSES:
John Becker
Fred White

INVENTOR:
Henry Blackman,
By his Attorneys,
Arthur G. Fraser & Co.

THE NORRIS PETERS CO., PHOTO-LITHO., WASHINGTON, D. C.

(No Model.) 4 Sheets—Sheet 2.

H. BLACKMAN.

APPARATUS FOR RECOVERING ALKALI.

No. 492,382. Patented Feb. 28, 1893.

FIG. 2.

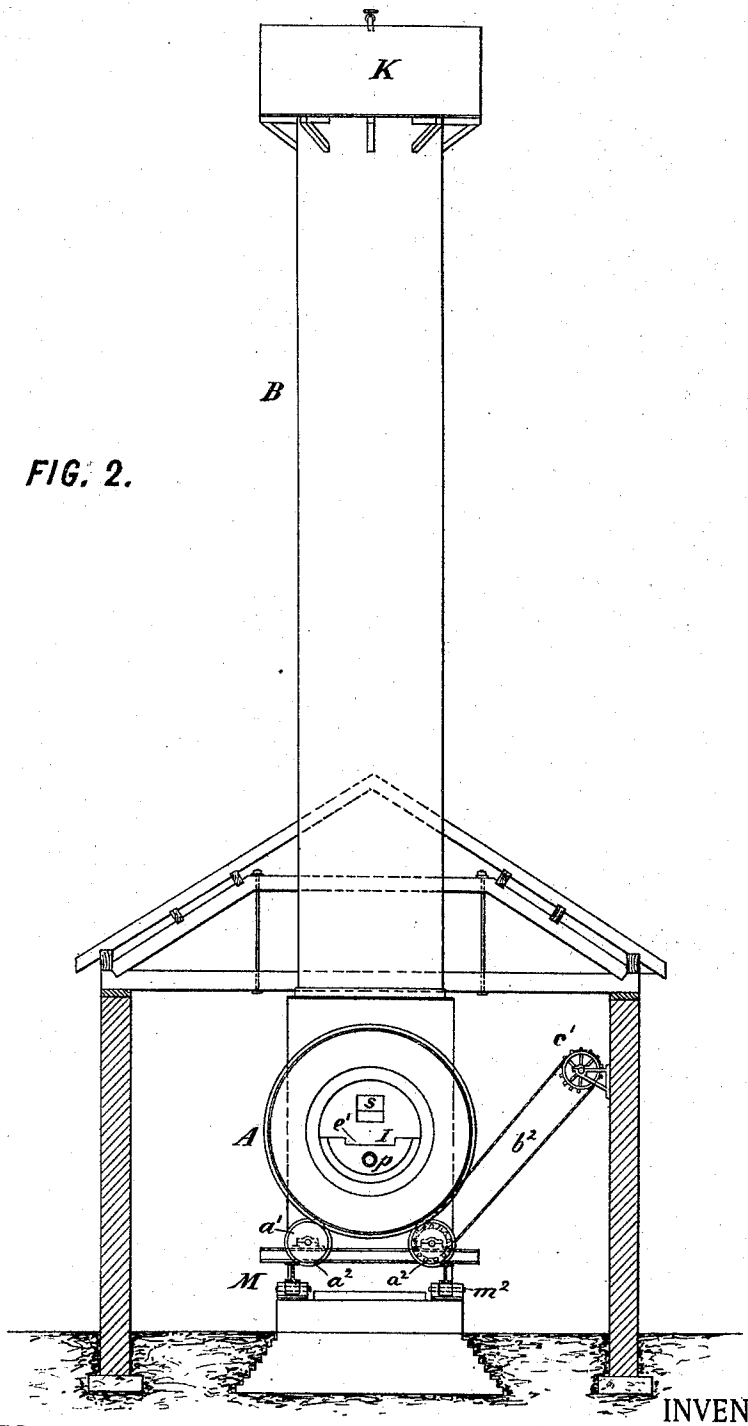

WITNESSES:
C. K. Fraser.
Fred White

INVENTOR:
Henry Blackman,
By his Attorneys,
Arthur C. Fraser & Co.

THE NORRIS PETERS CO., PHOTO-LITHO., WASHINGTON, D. C.

(No Model.) 4 Sheets—Sheet 3.

H. BLACKMAN.

APPARATUS FOR RECOVERING ALKALI.

No. 492,382. Patented Feb. 28, 1893.

FIG. 3.

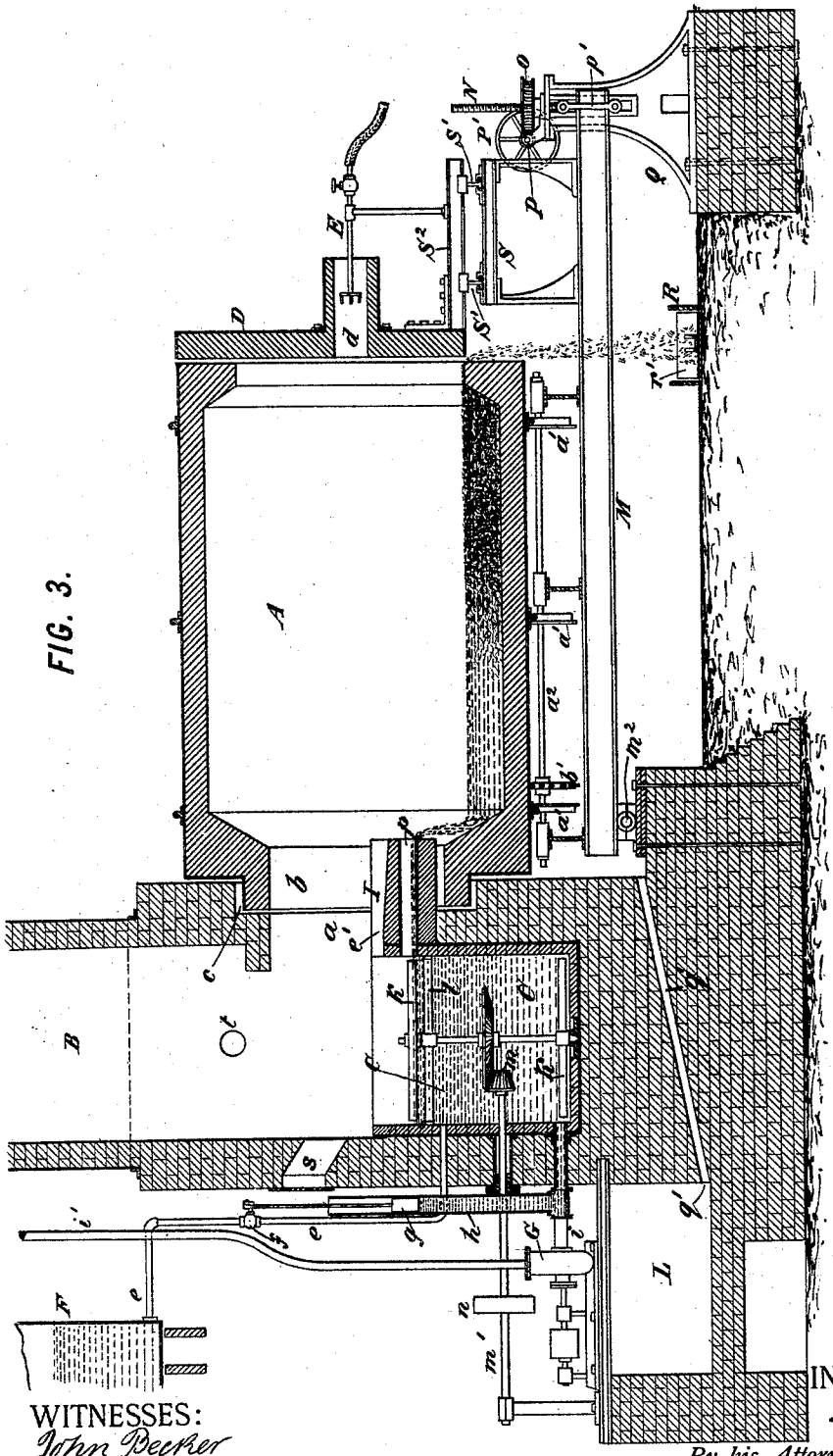

WITNESSES:
John Becker
Fred White

INVENTOR:
Henry Blackman,
By his Attorneys,
Arthur G. Brown & Co.

THE NORRIS PETERS CO., PHOTO-LITHO., WASHINGTON, D. C.

(No Model.) 4 Sheets—Sheet 4.

H. BLACKMAN.

APPARATUS FOR RECOVERING ALKALI

No. 492,382. Patented Feb. 28, 1893.

FIG. 4.

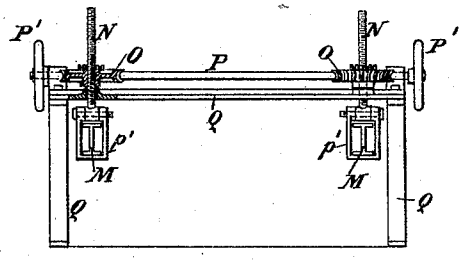

FIG. 5.

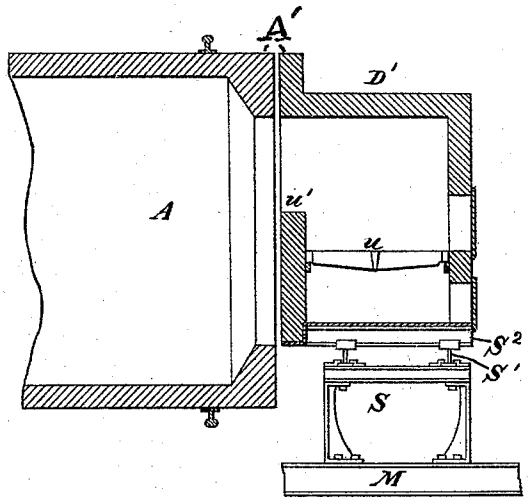

FIG. 6.

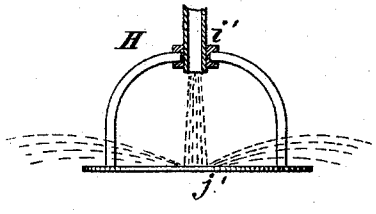

WITNESSES:
John Becker
Fred White

INVENTOR:
Henry Blackman,
By his Attorneys,
Arthur G. Fraser & Co.

THE NORRIS PETERS CO., PHOTO-LITHO., WASHINGTON, D. C.

UNITED STATES PATENT OFFICE.

HENRY BLACKMAN, OF NEW YORK, N. Y.

APPARATUS FOR RECOVERING ALKALI.

SPECIFICATION forming part of Letters Patent No. 492,382, dated February 28, 1893.

Application filed March 31, 1891. Renewed July 26, 1892. Serial No. 441,324. (No model.)

To all whom it may concern:

Be it known that I, HENRY BLACKMAN, a citizen of the United States, residing in the city, county, and State of New York, have invented certain new and useful Improvements in Apparatus for Evaporating and Calcining Alkaline and other Solutions, of which the following is a specification.

My invention provides an improved furnace designed more particularly for the recovery of soda or other caustic alkalies from the refuse liquors of pulp mills, but applicable also for the recovery of other refractory chemicals from solutions.

In recovering the refuse liquors from pulp mills it is customary to first concentrate the liquor and then to subject it to calcination in a furnace whereby the ligneous, mucilaginous and other combustible impurities contained in the liquor are burned out, leaving the alkali in a tolerably pure condition. In the process of calcination the combustible constituents while burning out are utilized as a portion of the fuel for maintaining the heat of the furnace and supplying heat for effecting the concentration.

My improved calcining furnace is of the rotary order, that is to say, its calcining chamber consists of a horizontally arranged barrel mounted to be slowly rotated and receiving through it the stream of burning gases which act upon the alkaline material which is fed into it and caused to pass through it from end to end. My improvements relate in part to the mounting of the rotary calcining chamber and in part to the means for concentrating the liquor to prepare it for the calcining process.

In its preferred construction my improved furnace comprises a stack, chimney or upright chamber, communicating at its lower end with the outlet from the calcining chamber, the latter being closed at its opposite end and provided with means for introducing burning gases to it mingled with air in proper proportions for maintaining combustion therein. The alkaline solution to be concentrated is introduced into the upper part of the chimney or stack in a shower or spray, or by streaming it down the walls of the stack, so that in its descent it is largely evaporated, and at the bottom of the stack it falls into a concentrating tank wherein it is stirred and circulated and from which it is pumped up to be again showered through the stack. The liquor after being sufficiently concentrated in this tank is caused to flow over and enters the revolving calcining chamber, wherein it is calcined, and the resulting alkali or ash is discharged therefrom at the opposite end.

Figure 1 of the accompanying drawings is a side elevation of my improved apparatus partly in vertical mid-section. Fig. 2 is an end elevation thereof partly in vertical section on the line 2—2 in Fig. 1. Fig. 3 is a vertical longitudinal section of the lower portion of the apparatus on a larger scale. Fig. 4 is an end elevation partly in vertical transverse mid-section, showing the gear for lifting and lowering the mounting for the calcining chamber. Fig. 5 is a partial section of the right hand end of Fig. 3, showing, however, a modified construction. Fig. 6 is an enlarged detail view of the nozzle.

Referring to the drawings, let A′ designate the furnace or combustion chamber and B the chimney or stack. The furnace A′ consists of a rotary calcining chamber A and means for supplying combustible gas or fuel thereto and for effecting the ignition of such fuel. The stack B is built preferably of solid masonry in any manner common in the building of chimneys, and extends to a suitable height to afford the requisite draft. At its lower end, and below the opening *a* through which it communicates with the calcining chamber A, it is provided with a pit C constituting a concentrating tank for the alkaline solution. This tank is preferably constructed with a metal shell and a brick lining. The rotary chamber A is constructed with its outlet end *b* which communicates with the opening *a* in the stack, to project into a recess *c* formed around this opening so as to make a suitably close connection or joint between the revolving chamber and the stationary stack. The opposite end of the chamber is closed by a shield D, formed with an opening *d* through which a stream of burning fuel in the form of gas or a spray of liquid is introduced from a burner E. The shield D is mounted in any suitable manner by means of which it may

be drawn back from the outer end of the chamber A, as is customary with rotary furnaces.

The alkaline liquid to be concentrated and calcined is drawn from a receiving tank F through a pipe *e* and flows into the tank C. Its flow is regulated automatically by a valve *f* in this pipe, Fig. 3 which is opened or closed by a float *g* working in a standpipe *h* which is in communication with the tank C. As the level is lowered in the tank C by the solution therein flowing off into the calcining chamber A, the descent of the float *g* opens the valve *f* and admits sufficient fresh liquid to restore the normal level. The denser liquid is drawn off from the bottom of the tank C through a pipe *i*, and is forced by a pump G up through a pipe *i'* to a spraying nozzle H arranged at some suitable height within the stack B, the flow being regulated by a valve *j*. The nozzle H may be of any suitable construction adapted either to spray or subdivide the liquid and thereby cause it to shower down through the stack, or to deflect it against the walls of the stack so that it shall be caused to stream down against the heated walls. The simple construction shown in Fig. 6 may be used consisting merely of the down-turned open end of the pipe *i'*, and beneath it a spatter-plate *j'* by which the liquid is deflected and the greater part of it is thrown against the walls of the stack. Other forms of nozzles or spray-valves may, however, be substituted. The liquid during its descent through the stack is evaporated to much greater density and falls back into the tank C. By the operation of the pump the liquid is being continually circulated through this tank, and from the bottom thereof into the stack, so that it is rapidly concentrated. The liquid in the tank is kept stirred by an agitator or stirring arms *k* mounted on an upright shaft having a bearing at its upper end in the cross frame *l*, and driven through bevel gears *m* from a horizontal shaft *m'* which enters the side of the tank through a stuffing box and is revolved by a belt on a pulley *n*, or by other means.

The tank C is provided with an outlet passage *p* for conducting the concentrated solution into the calcining chamber. This is preferably constructed as a pipe incased in a projecting arm I of masonry, which projects through the outlet or throat *b* of the revolving chamber A, so that the stream flowing through the passage *p* falls within the enlarged interior of the chamber. In case the passage *p* should become stopped, the liquid will overflow from the tank C over the top of the masonry I, which is provided with a central depression *e'* as shown in Fig. 2, through which the overflow will take place and whereby the overflow of the liquid into the recess *c* and out through the joint between the stack and chamber A, will be avoided. The most concentrated liquid which has last flowed from the stack into the tank, and which floats for a time on top of the liquid therein, is swept off by the upper stirrer *k* and passes out through the passage *p* to the calcining chamber. Only a portion of the concentrated liquid thus falling is discharged in this manner, the remainder being mixed with the remaining liquor in the tank and again drawn off from the bottom thereof, so that a continual circulation is maintained in the tank. The adjustment of the float *g* determines the level in the tank C, and consequently the rate of flow of the liquid out therefrom into the calcining chamber, and consequently also the rate of flow of fresh liquid into the tank.

By the location of the tank C close to the outlet from the calcining chamber A, the liquid contained in it is subjected to the heat of the burning gases flowing from this chamber into the stack, so that the heat of the fuel, as well as the heat generated by the burning of the ligneous and mucilaginous matters contained in the material undergoing calcination, is most thoroughly utilized for the concentration of the liquor being prepared for calcination.

By the streaming of the liquor to be concentrated down the walls of the stack, the latter is utilized not only as a chimney or flue but also as a concentrating chamber. This stack or chamber is preferably vertical, but might be inclined. At the top of the stack is placed a vapor separator J consisting of a plate or disk mounted at a suitable distance above the top of the stack where it will serve to intercept and deflect the stream of ascending gases and thereby cause any spray dust or solid matter to be disengaged. The matter thus separated is caught in a chamber K surrounding the top of the stack and inclosing the separator J. This chamber may be washed out by flowing liquor into it from a pipe i^2 constituting an upward continuation of the pipe *i'* from the pump G. The washings, carrying with them any alkaline particles, will run from the chamber through holes *q q*, and pass down the stack. The stack is provided with a door *r* to provide access to the nozzle H, and the pipe leading to it; with a door *s* to provide access to the tank C; and with an opening *t* through which to introduce a pipe for conveying gaseous or liquid fuel in order to introduce a further proportion of combustible into the stack for the purpose of better performing the evaporation or concentration of the liquid.

Under the pump G is constructed a save-all tank L which serves to catch any liquid that may leak from the pump or from any pipes or joints. In order to catch any material that may find its way through the recess *c* and joint between the revolving calcining chamber A and stack B, a special passage *q'* is provided which leads such leakage into the save-all L.

The rotary calcining chamber A is constructed in any usual or suitable manner, an outer shell of iron lined with fire-brick being preferable. The outer shell carries annular

rails which roll on supporting flanged-wheels a' fixed on two shafts a^2 at either side. On one of these shafts is fixed a sprocket-wheel b' driven by a chain b^2 from a similar sprocket-wheel on a shaft c'. By this means the chamber A is caused to revolve.

The revolving chamber A is mounted on a supporting frame M pivoted on trunnions at m^2 and provided with means for raising and lowering its opposite or free end, whereby it may be moved to any suitable inclination, and thereby the chamber A may be tilted to any extent desired. This is an important and desirable feature, as it enables the speed of travel through the chamber of the material undergoing calcination to be governed at will. The frame M is preferably constructed of longitudinal girders resting on the trunnions at one end and connected with a lifting apparatus at the other, and with transverse girders over them on which rest the bearings of the shafts a^2 as clearly shown. Any other suitable construction of frame may be provided, it being only essential that the frame shall properly support the calcining chamber through the medium of the shafts over which it is rotatively mounted, and shall be pivotally mounted so that it may be tilted or rocked to different angles. The trunnions m^2 might be otherwise arranged, but it is preferable to place them as near to the end b of the chamber as practicable, as thereby the tilting of the chamber exerts the least effect to open or close the joint c between the chamber and the masonry of the stack.

For tilting the frame M any suitable mechanism may be employed, such as adjusting screws, wedges, chain pulleys or block and tackle. The means which I prefer consists of vertical adjusting screws from which the free ends of the longitudinal beams of the frame are hung. This mechanism is shown in Figs. 3 and 4. I prefer to use two adjusting screws lettered N N, on the lower ends of which the longitudinal beams are hung through links p' p'. The screws are engaged by female screw-threads formed in the hubs of worm-wheels O O, which are engaged by worms on a transverse shaft P, which may be turned by a hand wheel P'. The wheels O O have a solid bearing on a frame Q resting on masonry or other suitable support. By turning the handle P' the two screws are propelled up or down simultaneously and the supporting frame is thereby tilted to any angle desired.

The operation of calcining in the chamber A is the same as in other rotary calcining furnaces. The only difference is that whereas heretofore the calcining chamber has been mounted at a certain invariable angle so that the passage of the soda liquor and its resultant the calcined ash through the chamber could not be regulated, by my construction of the chamber to be adjustable the rapidity of the passage of material through it may be regulated to a nicety as may from time to time be found desirable. The calcined material or ash as it is delivered from the calcining chamber falls out from the end thereof beneath the shield D, or through the space between the shield and the end of the chamber, and drops through the frame-work M into a conveyer trough R, wherein it is drawn along to any suitable point by means of a shoe or plate r' or by any known or suitable construction of conveyer, the details of which are immaterial. The shield D is supported on the same frame-work M as the chamber A, so that it is tilted with the latter. For supporting it I provide a frame S mounted on the frame M, over which are mounted transversely sliding frames S', and on which are again mounted a longitudinally sliding frame S^2, to which the shield D is fixed. By means of these frames the shield D may be slid backwardly and to either side in order to get access to the interior of the chamber A. When solid fuel is to be used, I provide in place of the shield D and burner d a separate initial combustion chamber D' for burning the solid fuel, as shown in Fig. 5. This may be made of masonry and of any suitable construction, with grate-bars u and bridge wall u', the space over which communicates with the end of the chamber A. This furnace is mounted through the medium of frames S, S', S^2 upon the frame-work M in the same manner as the shield D, of which it constitutes the equivalent, the function of each being to partially close the discharge end of the revolving chamber A, and to supply ignited fuel thereto. By adjusting the shield D or furnace D' to cause it to approach or recede from the chamber A, the admission of air through the space between may be adjusted to the extent desired.

My invention is not limited to the exact details of construction herein shown, as the same may be greatly modified. Those features of my invention which I consider essential are hereinafter defined in the claims. Those features of my invention which pertain to the concentrating of the solution before its calcination are not limited in their application to rotary calcining furnaces, but are equally applicable to those furnaces wherein the calcining chamber is stationary.

A furnace for concentrating alkaline or other solutions by showering or streaming down the walls of an upright chamber or stack, is claimed in my patent No. 478,981, granted July 18, 1892.

My present application for patent relates to the same subject matter of invention as another application for patent for furnace for evaporating and calcining alkaline and other solutions, filed by me March 19, 1892, Serial No. 425,543, and still pending; I make no claim herein to anything claimed in that application.

I claim as my invention the following defined novel features or improvements, substantially as hereinbefore specified, namely:

1. A calcining furnace consisting of a calcining chamber and an upright stack, a tank

at the base of said stack for receiving the solution to be calcined, a pump for drawing off the solution from said tank, and a pipe leading from the outlet of said pump and discharging into said stack, whereby the liquid is circulated in said tank, and repeatedly showered down the stack and returned into said tank preparatory to being discharged into the calcining chamber.

2. In a calcining furnace, the combination of an upright stack, a concentrating tank built into the base of the stack, a revolving calcining chamber having an outlet opening communicating with the base of the stack, and the base of the stack formed with an arm projecting into the calcining chamber, and with an outlet passage from said tank through said arm for delivering the concentrated solution from said tank into the calcining chamber.

3. In a calcining furnace, the combination of an upright stack, a concentrating tank built into the base of the stack, a revolving calcining chamber having an outlet opening communicating with the base of the stack, and the base of the stack formed with an arm projecting into the calcining chamber, and with an outlet passage from said tank through said arm for delivering the concentrated solution from said tank into the calcining chamber, and said arm formed with a depression or channel on its upper side through which the solution may flow in case of the stoppage of said passage, and whereby the overflow of the solution into the joint or space between the revolving chamber and the stack is prevented.

4. In a calcining furnace, the combination with the calcining chamber and stack of a concentrating tank built within the base of the stack, an outlet therefrom to the calcining chamber, a standpipe exterior to the furnace and communicating with said tank, a supply tank and pipe extending therefrom to said concentrating tank, a valve in said pipe, and a float in said standpipe for automatically operating said valve and thereby controlling the height of liquid in the concentrating tank.

5. In a calcining furnace, the combination of a calcining chamber and stack, a concentrating tank within the furnace, an agitator within said tank, a pump for drawing off the solution from said tank, and a pipe leading from the outlet of said pump and discharging the solution into the stack, whereby the solution in said tank is agitated and is repeatedly circulated from said tank and streamed down the stack.

6. In a calcining furnace, the combination of a calcining chamber and stack, a concentrating tank within the furnace, an upright shaft carrying stirring arms within said tank, a driving shaft passing laterally through said tank, and bevel gears within the tank for communicating motion from said driving shaft to said stirrer shaft, whereby the material in said tank may be effectively agitated and commingled.

7. In a calcining furnace, the combination with an upright stack and means for showering the solution to be concentrated down through said stack, of a separator for recovering any particles which might otherwise be carried out through the top of the stack, consisting of a deflecting plate mounted above the top of the stack, a collecting chamber arranged to inclose the upper end of the stack and receive any particles disengaged by said plate, and means for washing down any material collected by said chamber, consisting of a pipe for conveying liquid thereinto, and an opening from the bottom of said chamber into the stack, whereby the liquid directed into said chamber washes the recovered particles through said opening and down the stack.

8. The combination of a stationary stack, a horizontal furnace comprising as part thereof a revolving calcining chamber having its receiving end communicating with said stack, and arranged to discharge the calcined material from its opposite end, a tilting framework for supporting said furnace and tilting it to varying angles, pivoted adjacent to the receiving end of said chamber, and mechanism for raising or lowering said framework to raise or lower the discharge end of said chamber at will.

9. The combination of a stationary stack, a horizontal furnace comprising a revolving calcining chamber having its receiving end communicating with said stack, and means at its opposite or discharge end for partially closing it and for supplying ignited fuel to it, a tilting framework for supporting said furnace and tilting it to varying angles, pivoted adjacent to the receiving end of said chamber, and mechanism for raising or lowering said framework to raise or lower the discharge end of said chamber at will.

10. The combination of a stationary stack, a horizontal furnace comprising a revolving calcining chamber having its receiving end communicating with said stack, and a stationary shield or initial combustion chamber at its opposite or discharge end for partially closing it and having an opening for supplying ignited fuel to it, the supporting wheels and shafts of said rotary chamber, a support for said stationary shield or chamber, a tilting framework for supporting said furnace, on which said wheels and shafts and said support are mounted, and mechanism for raising or lowering said framework to tilt it to different angles at will.

11. The combination of a stationary stack, a horizontal furnace comprising a revolving calcining chamber having its receiving end communicating with said stack, and a stationary shield or initial combustion chamber at its opposite or discharge end for partially closing it and having an opening for supplying fuel to it, the supporting wheels and shafts of said rotary chamber, a support for said stationary shield or chamber, constructed with slideways to admit of the adjustment of the shield or chamber toward or from the dis-

charge end of the rotary chamber, a tilting framework for supporting said furnace, on which said wheels and shafts and said support are mounted, and mechanism for tilting said framework to different angles at will.

12. The combination with a revolving calcining chamber and its shield or initial combustion chamber, a tilting platform supporting them, and a lifting mechanism therefor consisting of upright screws to which the ends of the longitudinal beams of the platform are connected, worm-wheels having threaded hubs engaging said screws, and a transverse shaft having worms meshing with said worm-wheels.

In witness whereof I have hereunto signed my name in the presence of two subscribing witnesses.

HENRY BLACKMAN.

Witnesses:
GEORGE H. FRASER,
ARTHUR C. FRASER.