Nov. 1, 1949 C. J. M. MEIJER, NEE KERKHOF 2,486,859

LUMINOUS ADVERTISING SIGN

Filed May 8, 1947

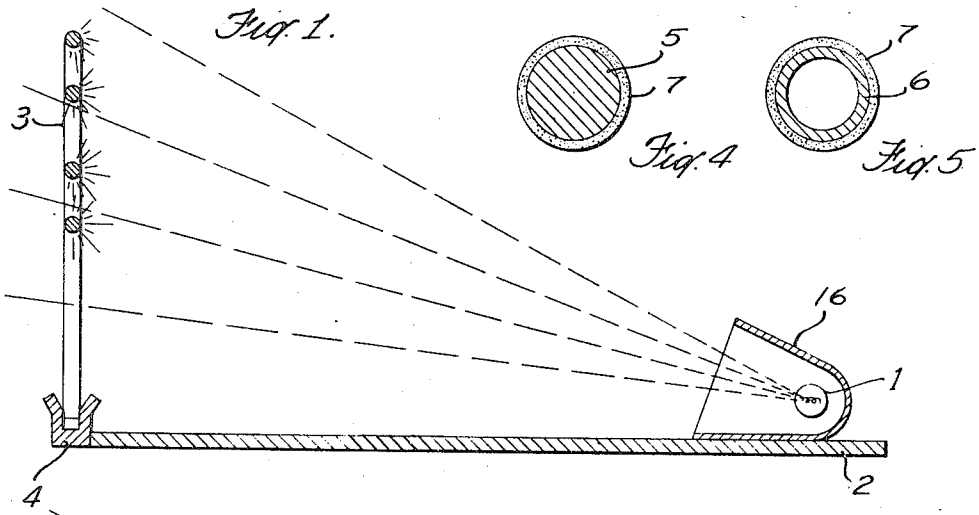

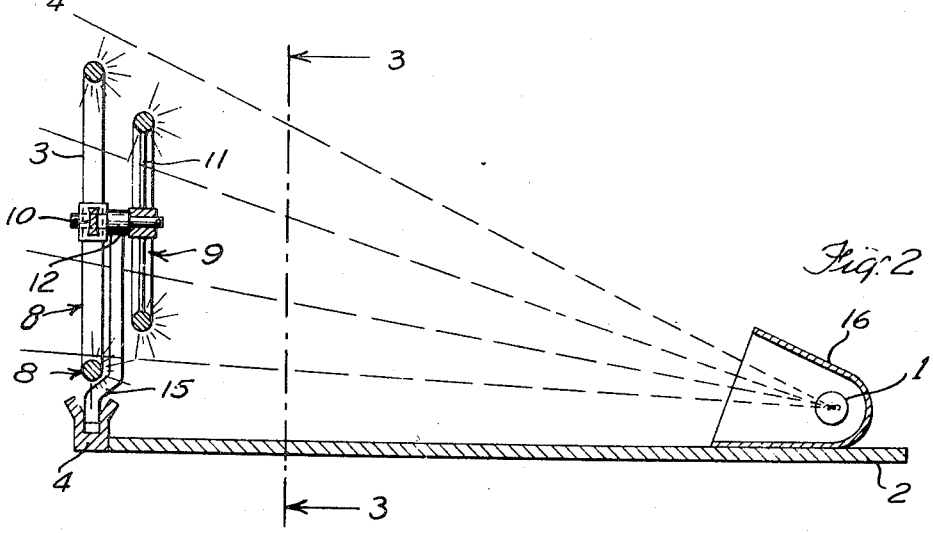

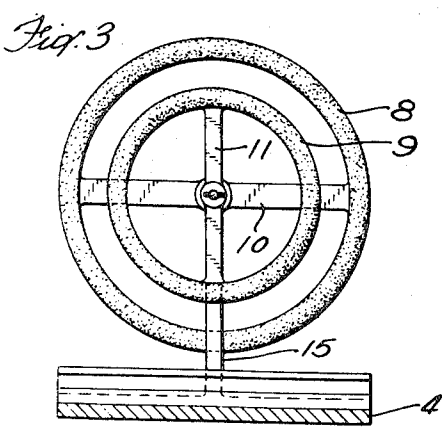

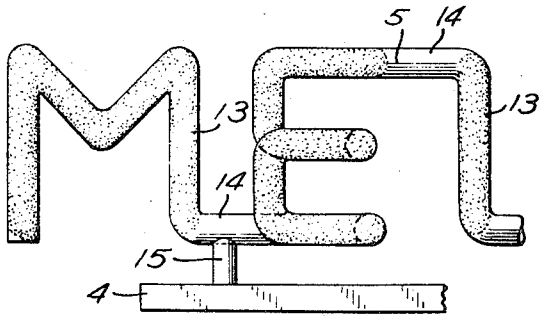

Fig. 6.

Inventor

CORNELIA JOHANNA MARIA MEIJER

By Ronald H. Hinson

Attorney

Patented Nov. 1, 1949

2,486,859

UNITED STATES PATENT OFFICE

2,486,859

LUMINOUS ADVERTISING SIGN

Cornelia J. M. Meijer, nee Kerkhof, Laren, Netherlands, assignor to Scot-Signs, Inc., Dallas, Tex., a corporation of Texas

Application May 8, 1947, Serial No. 746,874
In the Netherlands January 29, 1947

5 Claims. (Cl. 40—134)

1

This invention relates to improvements in luminous advertising signs, and more particularly to simulated neon and related rare gas signs.

While neon signs are very widely used today, they suffer from certain disadvantages. Thus they can be installed only by specialists who have to erect them so that they are free from mechanical strains and stresses. High voltage transformers are required and safety measures have to be taken to ward off electrical and fire hazards.

The tubes which form the advertising elements of these neon signs are fragile and they have therefore to be handled with care during transportation as well as when being erected. This is particularly so when displays are removed or periodically changed as in show-windows. Their application to moving vehicles, such as automobiles, trucks, trolley cars and railroad trains, is entirely excluded.

All of this interferes with the wider use of neon sign advertisements, and, because of the high initial cost, the constant replacement of advertising texts or illustrations, is uneconomical.

Neon and similar illuminated sign advertisement is therefore usually restricted to the permanent use of one and the same text in the same place. Because neon tubes are made of glass and have to have a certain thickness to be strong enough, it is not possible to make satisfactory small neon signs in script form.

It is a principal object of this invention to provide a simulated neon sign substitute in which the foregoing disadvantages are avoided.

In accordance with this invention use is made of advertising elements or indicia composed entirely or in part of photo-luminescent material and adapted to be illuminated by an artificial source of ultra violet light, such as a spectrum-analysis lamp, or a high-pressure mercury vapor lamp equipped with a filter for screening out visible light rays.

In accordance with this invention, there is provided, in an advertising device for producing an illuminated simulated neon sign in which ultra-violet light is directed onto photo-luminescent matter contiguous with the surface of intrinsically non-luminous structural material, a display element in which the portions to be illuminated present a continuous photo-luminescent surface of substantially arcuate cross-section to said ultra-violet light, whereby said surface is illuminated completely over the visible arcuate surface of the order of 180° and the tubular self-luminous character of a neon sign is simulated.

The invention will be better understood by reference to the accompanying drawings illustrating preferred embodiments thereof, and in which—

2

Fig. 1 is a cross-sectional side view of an advertising device according to the invention;

Fig. 2 is a cross-sectional side view of a modified form of advertising device in which the display element comprises two parts in different planes, either or both of which may be rotated;

Fig. 3 is a view taken on line 3—3 of Fig. 2;

Fig. 4 is a cross-section of a solid display element;

Fig. 5 is a cross-section of a tubular display element;

Fig. 6 is a partial front view of an advertising element involving lettering.

Referring to the drawings, there is provided a source of ultra voilet rays (shown in broken lines in Figs. 1 and 2), onto a display element 3 suitably supported as at 4 to base 2.

The display element 3 is composed of wire, rod or tubular material essentially presenting an arcuate or curved surface to the source of ultra violet light. As shown in Figs. 4 and 5, the elements may be formed of solid cylindrical rods or wires 5 or of tubular material 6, overcoated with a layer of photo-luminescent material 7.

In the arrangement shown in Figs. 2 and 3, the display element comprises two units 8 and 9 arranged the one in front of the other, suitably joined by cross pieces 10 and 11 and spindle 12, so that elements 8 and 9 can be rotated continuously or intermittently by any suitable means (not shown).

In Fig. 6 a series of letters M, E, and I are shown in display form having arcuate surfaces and coated with photo-luminescent pigment over those surfaces it is desired to illuminate. In these drawings the photo-luminescent pigment is indicated by stippling 13 and the non-stippled portions as at 14 and 15, Fig. 6, indicate portions of the display element which are not illuminated by the ultra violet light. Thus the supporting connections 14 between the letters and the support 15, for the display element as a whole, remain invisible in the dark.

The display elements 3 are interchangeably mounted in the supports 4. Reflecting and shielding means 16 are provided for the ultra violet light source 1.

In use this invention provides a surprising light effect which does not blind with an intensive surface clearness, and which closely simulates a neon sign while being considerably less dangerous; it is possible to form even very thin elegant letters and figures which cannot possibly be manufactured with neon tubes.

The display elements may be made of metal, e. g. aluminum coated or mixed with a photo-luminescent substance at those places which are to be illuminated. If continuous wires or rods are used, they can be locally coated with a non-

active layer, in the same manner as neon tubes are locally intercepted with opaque coatings.

Since the display elements are light and insensible to rupture, they can be made in easily interchangeable units adapted to be inserted in a holder. Also short sentences can be composed of sections, each containing a letter or word, which with neon signs is impossible.

The invention may also be applied to moving vehicles, such as trucks, autobusses, trams and trains. When applying the invention for display purposes use can be made of box in which the lamp is mounted and which at the front side is provided with a platform on which an amphitheatrical holder is situated and in which the texts are disposed. For moving vehicles a similar construction is used adapted to the circumstances.

Use can be made of filters, lenses, reflectors, etc., to control the ultraviolet radiation as much as possible. Any visible radiation can be prevented and the active radiation can be made as strong as possible or be "bundled" in one definite direction. Furthermore with one single ultraviolet light source more than one single text or figure can be arranged in different mutual distances and heights, resulting in a stereoscopic effect.

If desired, the display elements can be made intermittently or continuously movable with respect to the source of ultraviolet light resulting in changes in light intensity and color to yield a very special effect.

By this invention neon tubes are replaced by photo luminescent wires, rods or tubes which give the same or even better results and are made of infrangible material; figure and each text is made in a simple way, and is interchangeable. There is a great choice among the fluorescence colors, thus providing means for varying the color of the text or reproduction at any arbitrary place.

I claim:

1. In an advertising device for producing an illuminated simulated neon sign by directing ultra-violet light onto photoluminescent matter contiguous with the surface of intrinsically non-luminous structure material, a display element in which the portions to be illuminated present a continuous photo-luminescent surface of substantially arcuate cross-section to said ultra-violet light, whereby said surface is illuminated completely over the visible arcuate surface of the order of 180° and the tubular self-luminous character of a neon sign is simulated.

2. In an advertising device for producing an illuminated sign by directing ultra-violet light onto photo-luminescent matter associated with the surface of intrinsically non-luminous structural material, a display element in which the portions associated with said photo-luminescent matter are formed of substantially tube-shaped material to present a substantially continuous photo-luminescent arcuate surface to said ultra-violet light, whereby the self-luminous character of a neon sign is simulated, at least a part of said display element being continuously movable in its own plane.

3. An imitation neon sign comprising metal of the curved cross-sectional character of tube, rod or wire bent into a desired configuration, a continuous coating of photo-luminescent pigment on the surface of said wire, and a source of ultra-violet light externally focussed on said pigment, whereby the illuminated curved surface over the entire visible area up to 180 degrees of curvature radiates fluorescent light.

4. A simulated neon sign comprising base members of cylindrical cross section of the character of wire, rod and tube having thereby a curved outer surface, said base members being bent, curved and formed into advertising indicia, supporting elements therefor, means for rigidly supporting each of said indicia in relationship to each other to form a sign, at least two of the indicia elements being formed by continuous curvature of a single rod as to form supporting means therebetween, fluorescent material coating only such portions of said base members intended to be visible in the dark, a source of ultra-violet light focussed and supported in such close proximity and sufficient strength to supply externally a high intensity of ultra-violet light radiation upon said fluorescent coated curved surfaces of said base members as to cause them to fluoresce brightly over the entire visible arcuate surface area up to 180 degrees of curvature thereof.

5. Advertising device comprising several elongated bodies each having a curved surface of the character of wire, rod and tube, each body formed into a desirable shape as an indicia member of the advertising device and each having at least one supporting element comprising a holder, said holder being a clamping element cooperating with a portion of the elongated body to support the same, each of said elongated bodies being disposed in a preselected height and depth relationship to the others whereby a stereoscopic sign effect is presented by said advertising device, fluorescent material at least partially coating at least one of said visible indicia elements and at least one source of ultra-violet light focussed from an invisible light source of sufficient strength and supported in such close proximity to said indicia as to supply externally a high intensity of ultra-violet light radiation upon said fluorescent surface whereby portions of said advertising element normally visible in ordinary light are invisible and only the continuously coated portions become intensely fluorescent when activated by said ultra-violet light, whereby the surface is illuminated completely over the visibly curved surface of the order of 180° and the tubular self-luminous character of a neon sign effect is simulated.

CORNELIA J. M. MEIJER, NEE KERKHOF.

REFERENCES CITED

The following references are of record in the file of this patent:

UNITED STATES PATENTS

Number	Name	Date
1,004,503	Troy	Sept. 26, 1911
1,025,338	Troy	May 7, 1912
1,362,284	Gay	Dec. 14, 1920
1,418,240	Curie et al.	May 30, 1922
1,636,970	Sulzberger	July 26, 1927
1,648,957	Mock	Nov. 15, 1927
1,873,261	Barclay	Aug. 23, 1932
2,058,900	McDonald	Oct. 27, 1936
2,152,353	Lewin	Mar. 28, 1939
2,416,056	Kallmann	Feb. 18, 1947

FOREIGN PATENTS

Number	Country	Date
801,948	France	May 30, 1936
814,034	France	Mar. 8, 1937

Certificate of Correction

Patent No. 2,486,859 November 1, 1949

CORNELIA J. M. MEIJER NÉE KERKHOF

It is hereby certified that error appears in the printed specification of the above numbered patent requiring correction as follows:

Column 3, line 47, for the word "structure" read *structural*;

and that the said Letters Patent should be read with this correction therein that the same may conform to the record of the case in the Patent Office.

Signed and sealed this 9th day of May, A. D. 1950.

[SEAL]

THOMAS F. MURPHY,
Assistant Commissioner of Patents.