July 6, 1954 M. S. WILLIAMS 2,682,763

GARAGE DOOR LATCH

Filed Oct. 26, 1950 2 Sheets-Sheet 1

Fig. 1.

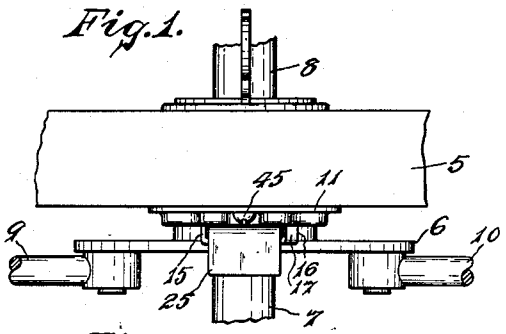

Fig. 2.

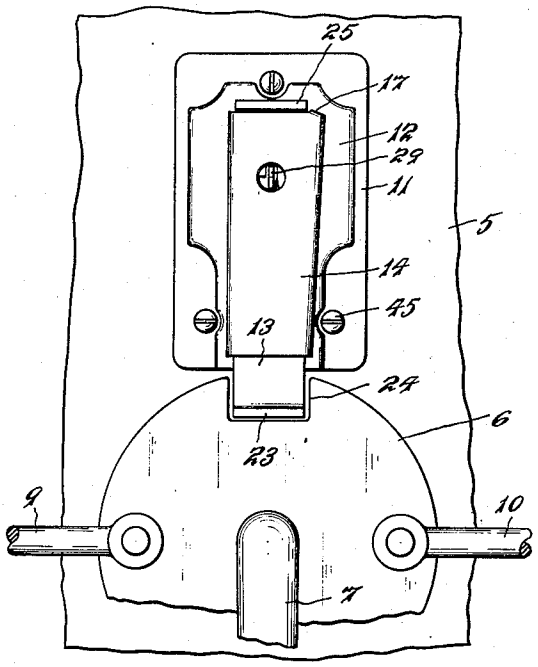

Fig. 3.

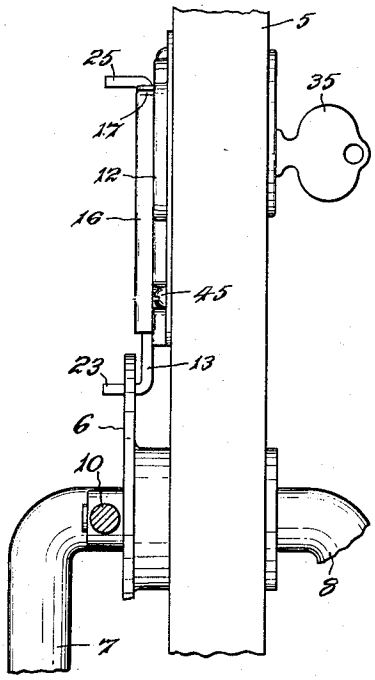

Fig. 4.

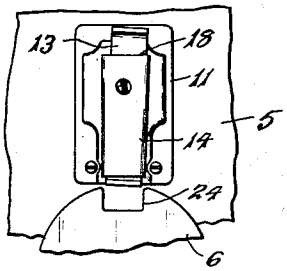

INVENTOR.
MERTON S. WILLIAMS.

BY

Louis V. Lucia

ATTORNEY.

July 6, 1954 M. S. WILLIAMS 2,682,763

GARAGE DOOR LATCH

Filed Oct. 26, 1950 2 Sheets-Sheet 2

Fig. 5.

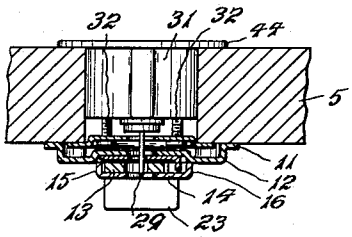

Fig. 6.

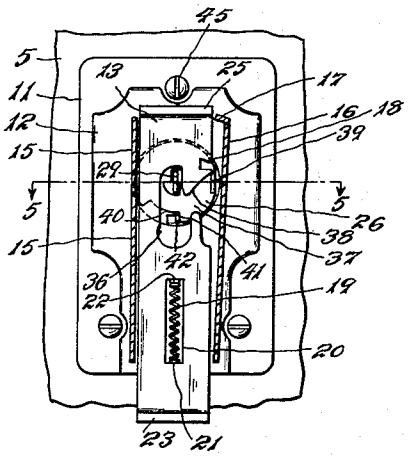

Fig. 7.

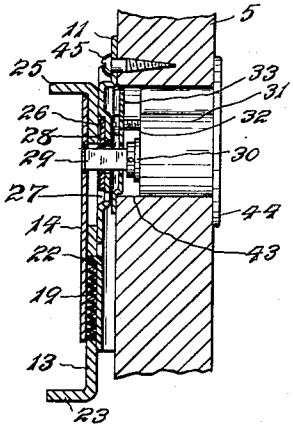

Fig. 8.

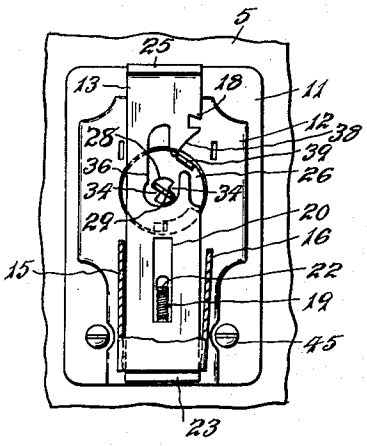

Fig. 9.

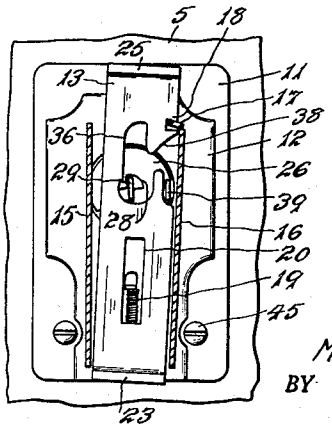

INVENTOR.
MERTON S. WILLIAMS.
BY
Louis V. Lucia
ATTORNEY.

Patented July 6, 1954 2,682,763

UNITED STATES PATENT OFFICE

2,682,763

GARAGE DOOR LATCH

Merton S. Williams, Terryville, Conn., assignor to The Eagle Lock Company, Terryville, Conn., a corporation of Connecticut

Application October 26, 1950, Serial No. 192,177

8 Claims. (Cl. 70—211)

1

This invention relates to a garage door latch and more particularly a latch which is adapted to be operated manually from the inside of the door and only with a key from the outside of the door.

An object of the invention is to provide a latch for doors such as commonly used in garages and other similar buildings which are provided with bolting mechanisms.

A further object of the invention is the provision of a latch which is economical to produce, durable in its construction and simple in its operation.

Further objects and advantages of the invention may be more clearly understood from the following description and the accompanying drawings in which:

Fig. 1 is a plan view of a portion of a door showing my improved latch attached thereto.

Fig. 2 is an inside view of said door portion.

Fig. 3 is an edge view thereof.

Fig. 4 is an inside view of said portion of the door on a reduced scale and showing the latch in unlatched position.

Fig. 5 is a plan view of said portion of the door and latch on line 5—5 of Fig. 6.

Fig. 6 is an inside view of the door portion and latch with the cover plate of the latch shown in section.

Fig. 7 is a sectional side view of the door portion showing the latch thereon in central vertical section and the key operated locked in elevation.

Fig. 8 is a view similar to Fig. 6 but showing the cover plate partly broken away and the latch bolt in retracted position.

Fig. 9 is a view similar to Fig. 6 but showing the latch secured in its retracted position.

In the embodiment of my invention which is illustrated in the drawings, the numeral 5 denotes a portion of a door such as commonly used on garage buildings and the like and which is preferably provided with a bolting mechanism that includes a disk shaped operating member 6 which is rotatable by inner and outer handles 7 and 8, respectively. The said handles may be rotatably mounted through the door in any suitable manner to permit rotation of the member 6 thereby for moving a pair of conventional bolting rods 9 and 10 into or out of bolting position; the said bolting rods being usually projected into openings in the conventional tracks on which the door slides, which tracks have been omitted from the drawings since the construction thereof is well known by those skilled in the art.

My improved latch comprises a base 11 having

2

a raised portion 12 on which there is mounted the latching mechanism which includes an elongated latch bolt 13 that is longitudinally slidable on said raised portion of the base and is guided thereon by means of a cover plate 14 having side walls 15 and 16 respectively forming guides for the said latch bolt. The side wall 16 diverges away from the side wall 15 as it extends towards the top of the cover, and a detent 17 is provided on said cover, adjacent the side wall 16, to receive a hook portion 18 on the latch bolt for retaining said bolt in retracted position against the tension of a latching spring 19 which is contained within a slot 20 in the bolt. One end of said spring abuts the end 21 of the slot and the other end abuts a projection 22 that extends perpendicularly from the raised portion 12 of the latch base and provides an anchoring abutment for the end of the said spring 20.

The latch bolt 13 has, at its lower end, a perpendicular latching portion 23 which fits within a latching notch 24 in the bolt operating member 6 and, at the opposite end thereof, a perpendicular portion 25 which serves as a handle for manually moving the bolt to its retracted position.

In order to provide for the operation of the said latch bolt with a key from the outside of the door, there is included in the latch mechanism an operating disk 26 which is rotatable within a recess 27 in the raised portion 12 of the latch base and has an opening 28 extending therethrough that receives an operating bar 29 which projects from a rotatable plug 30 that is contained within a conventional cylinder lock 31 secured to the door in a well known manner by means of screws 32—32 that extend through a mounting plate 33 for said cylinder.

The opening 28 is provided with inwardly extending projections 34—34 which are adapted to be engaged by the opposite sides of the operating bar 29 for causing rotation of the disk 26 in a clockwise direction from the outside of the door, by means of a key 35 which is adapted to rotate the plug 30, and permit limited free movement of said plug independently of the disk 26.

The latch bolt has an elognated slot 36 which is sufficiently wide to receive the operating bar 29 therein in different positions, such as indicated in Figs. 6 to 9, and permit sliding movement of the latch bolt independently of said bar. The said slot is open at one side at 37 and the latch bolt is provided with a projection having a cam surface 38 which is adapated to be engaged by

an operating finger 39 on the operating disk 26; the said disk being formed with a notch 40 in the edge thereof that provides a stop shoulder 41 adapted to strike an abutment 42 that projects from the base to limit the rotational movement of the operating disk by the key operated plug 30 and thereby position the finger 33 with relation to the cam surface 38. In installing my improved latch upon a door, the lock cylinder 31 is first secured within the opening 43, with its flange 44 resting against the outside of the door. The latch is then placed over the end of the operating bar 29, so that the said bar will project through the opening in the operating disk 26, and is secured to the door by means of screws 45. It will be noted that the operating bar 29 extends beyond the disk 26 in order to permit the installation upon doors of different thickness.

The bolt is normally in its retracted position as illustrated in Fig. 9 wherein the hook portion 18 engages the detent 17 on the cover and retains the said bolt in its retracted position against the tension of the latching spring 19. When the latch is in said normal position, the operating member 6 may be rotated for bolting or unbolting the door.

The operation of my improved latch is as follows:

When it is desired to lock the said operating member 6 against rotation from the inner side of the door, so that the door cannot be unbolted from the outside, the latching bolt 13 is moved into the position illustrated in Fig. 6 by merely grasping the handle 25 and moving the bolt sidewise in a direction away from the side 16 of the cover plate. This will cause the hook portion 18 to disengage the detent 17 and thus permit the latching spring 19 to project the latch downwardly and move the latching portion 23 thereof into the latching notch 24 of the said operating member 6 to prevent rotation of said member and thereby retain the bolting rods in bolting position.

The said latching bolt may be moved to its retracted position from the inside of the door, whenever desired, by merely grasping the handle portion 25 and pulling the latch upwardly against the latching spring 19, and then moving the bolt sidewise to cause the hook portion 18 to engage the detent 17 and thereby retain the latching bolt in its retracted position to permit independent operation of the operating member 6. The said latching bolt cannot at any time be operated from the outside of the door, however, without the use of a key.

The latch may be moved out of its latched position with a key 35 by inserting the key into the plug 30 and rotating the said plug in a clockwise direction. This will cause the operating bar 29 to engage the projections 34—34 and rotate the operating disk 26 in a clockwise direction and thereby move the operating finger 39 into engagement with the upper end of the cam surface 38 as shown in Fig. 6. Continued rotation of the disk by the key will then cause the bolt to be withdrawn against the tension of the spring 20 into the position illustrated in Fig. 8, in which position the latch bolt is urged towards the side 15 of the cover plate, by means of the said operating finger 39, and the hook portion 18 is thereby prevented from engaging the detent 17. Therefore, the said latching bolt cannot be secured in its retracted position by said hook portion and detent except when it is pulled back manually by the handle portion 25.

It will be noted from Figs. 6 and 8 that when the operating disk 26 is rotated by the key, the operating finger 39 will be moved in an upward direction so that, when it engages the cam surface 38, it will raise, or retract, the bolt against the tension of the spring 19. Also, when the latch is secured, in its retracted position as illustrated in Fig. 9, it can be moved from said position to its latching position by means of the key, since rotation of the disk 26 by the key will cause the operating finger 39 to engage the bottom portion of the cam surface 38 and move the bolt to the position illustrated in Fig. 8 and thereby disengaging the hook portion 18 from the detent 17.

Upon the key being then released, the bolt will be automatically moved to its latching position by means of its latching spring 19.

It will be understood from the above description that the latching bolt of my improved latch may be moved by means of the key from the latched to unlatched position, or from the retained retracted position shown in Fig. 9 to its latching position. The said latching bolt, however, cannot be moved with the key into the position illustrated in Fig. 9 and it can only be moved into this position by manual operation. This feature of my invention is very desirable for the reason that it prevents the latch from bein unintentionally moved into the retained position shown in Fig. 9 when it is retracted by means of the key.

It will be further understood that, when the operating member 6 is rotated to a position wherein the door is not bolted by the bolting rods 9 and 10, the latch bolt may be forced against the periphery of the said operating member 6 by the spring 20 and, when in said position, the hook portion 18 is prevented from engaging the detent 17 since it is retained thereabove by engagement of the lower end of the bolt with the periphery of the member 6. Therefore, when the door is shut and the said member 6 is rotated to move the rods 9 and 10 into bolting position, the notch 24 will come into register with the latching portion 23 and the latch bolt will then automatically move into latching position, under the tension of the spring 19, and remain in said position until it is again retracted; either manually by means of the handle portion 25 from the inside of the door, or by the key, indicated at 35, from the outside of the door.

I claim:

1. In a latch comprising a base, a latching bolt slidable on said base, a cover plate extending over an intermediate portion of said bolt and having side wall portions for guiding the bolt on the base, means at one terminal end of said bolt for engaging and operating a separate operating member to prevent operation thereof, the opposite terminal end of the bolt being directly manually engageable for moving the bolt to retracted position to release said operating member and key operated means for moving said bolt to retracted position from the outside of the door; and means for retaining said bolt in retracted position operable only when the bolt is moved to said position manually.

2. In a latch comprising a base, a latch bolt slidable longitudinally on said base, a cover plate extending over an intermediate portion of said latch bolt and having side walls for guiding said bolt, one end of said bolt being operable to engage a member adjacent to the latch and prevent operation of said member, the opposite end of said

bolt having a handle portion whereby the bolt may be retracted manually from the inside of the door and key operated means for retracting the said bolt from the outside of the door; a detent, and a hook portion on said bolt adapted to engage said detent to retain the bolt in retracted position only when moved thereinto manually; the said hook portion being disengageable from the detent both manually and with said key operated means to thereby permit the bolt to be moved to latching position.

3. In a latch for a door bolting mechanism comprising a bolting member and an operating member rotatable in said door for moving said bolting member into and out of bolting position, the said latch comprising a base, a latching bolt longitudinally slidable on said base, a spring member anchored on said base and normally urging said latching bolt into latching position, means at one end of said latching bolt adapted to extend into a notch in said operating member and prevent rotation thereof when the latching bolt is in latching position and a projection at the opposite end of said latching bolt manually engageable for manually moving the bolt to retracted position from the inside of the door; and key operated means for operating the latch from the outside of the door including a cam surface upon the latching bolt, an operating disk rotatable on said base, an operating finger extending from said disk and engaging said cam surface, key controlled means for rotating said disk from the outside of the door and thereby causing retraction of the bolt, and means for positioning said operating disk to locate the operating finger relatively to the cam surface.

4. In a latch comprising a base, an elongated latching bolt longitudinally slidable on said base and a spring normally urging said bolt into latching position; a cover having side wall portions adjacent the opposite sides of the bolt, one of said wall portions diverging away from the opposite wall portion in the direction towards the top of the cover, a detent on said cover adjacent the end of said diverging wall portion, a hook portion on the bolt engageable with said detent for retaining the bolt in retracted position against the tension of the said spring, a cam surface on said bolt, and key actuated means operable from the outside of the door and cooperating with said cam surface for retracting the bolt, the rear end portion of the latching bolt being movable laterally between the said wall portions to permit engagement and disengagement between the said hook portion and detent.

5. In a latch comprising a base and an elongated latching bolt longitudinally slidable on said base; a cover plate extending over the intermediate portion of the bolt and having at one side thereof a wall portion parallel to the axis of the base and at the opposite side a wall portion diverging from the said axis in a direction towards the top of the base, the lower ends of said wall portions being spaced substantially the width of the bolt to slidably guide the lower portion thereof on the base, the upper ends of said wall portions being spaced to permit lateral movement of the upper portion of the latching bolt, a detent projecting inwardly adjacent the upper end of one of said wall portions to substantially the same distance from the opposite wall portion as the lower ends of said wall portions are spaced to thereby guide the rear portion of said bolt in its

longitudinal movement, a notch in one side of said bolt providing an abutment movable into engagement with said detent when the bolt is retracted for retaining the bolt in its retracted position, and key operated means operable from the outside of the door for moving the bolt to latching position or for disengaging said abutment from the detent to cause movement of the bolt into latching position.

6. In a latch comprising a base, an elongated latching bolt slidable on said base, latching means at the lower end of the bolt for engaging a separate member, means for manually retracting the bolt from the inside of the door to which it is attached, key operated means for retracting the bolt from the outside of said door, means for normally urging the bolt into latching position, and a cover secured to said base and extending over an intermediate portion of said bolt for slidably retaining the bolt on said base; the said cover having a side wall portion parallel to the longitudinal axis of the base and an opposite side wall portion which diverges away from said axis as it extends towards the top of the cover to thereby permit lateral movement of the upper portion of the bolt between said wall portions, a detent extending inwardly from the said diverging wall of the cover and guiding said bolt along the axis of the base, and a hook portion on said bolt engageable with said detent by lateral movement of the bolt when in retracted position.

7. In a latch comprising a base, a latching bolt slidable on said base, a cover plate extending over an intermediate portion of said bolt and having side wall portions for guiding the bolt on the base, means at one terminal end of said bolt for engaging a separate operating member to prevent operation thereof, the opposite terminal end of the bolt being directly manually engageable for moving the bolt to retracted position to release said operating member and key-operated means for moving said bolt to retracted position from the outside of the door, means for retaining said bolt in retracted position operable only when the bolt is moved to said position manually, said last named means including interlocking elements on one of said walls and the bolt engaging when the bolt is in retracted position.

8. In a latch comprising a base, a latching bolt slidable on said base, a cover plate extending over an intermediate portion of said bolt and having side wall portions for guiding the bolt on the base, means at one terminal end of said bolt for engaging a separate operating member to prevent operation thereof, means at the opposite terminal end of the bolt for manually moving it to retracted position to release said operating member and key-operated means for moving said bolt to retracted position from the outside of the door; said side walls being spaced to permit lateral tilting movement of the bolt, one of said side walls being provided with a lug projecting inwardly toward said bolt, and said bolt being provided with a notch wherein said lug engages upon retraction of the bolt when the bolt is manually retracted and laterally tilted.

References Cited in the file of this patent

UNITED STATES PATENTS

Number	Name	Date
1,107,297	Grossmann	Aug. 18, 1914
1,180,943	Prazmo	Apr. 25, 1916
2,523,559	Couture	Sept. 26, 1950