United States Patent

Kirzinger et al.

[15] **3,639,954**

[45] **Feb. 8, 1972**

[54] APPARATUS FOR MAKING A REINFORCED WEB

[72] Inventors: **Horst Kirzinger; Alfons Kirzinger,** both of Neustadt, Germany

[73] Assignee: **KIRSON Patentverwertung und Vertriebsgesellschaft mbH,** Neustadt, Germany

[22] Filed: **Dec. 31, 1969**

[21] Appl. No.: **889,565**

[52] **U.S. Cl.** .....**28/1 CL,** 156/439

[51] **Int. Cl.** **D04h 3/04,** D04h 3/14

[58] **Field of Search** .....28/1 CL, 72 CS; 156/177, 179, 156/439, 440

[56] **References Cited**

UNITED STATES PATENTS

1,014,916	1/1912	Stevens	156/439
1,015,174	1/1912	Gueffroy	156/439
1,914,801	6/1933	Chadwick	156/440
2,692,635	10/1954	Polley	156/439
3,156,027	11/1964	Wellman	156/439 X
3,336,645	8/1967	Mirsky	28/72 CS X
3,364,701	1/1968	Carman	156/439 X
3,490,976	1/1970	Gidge	156/440 X
3,523,844	8/1970	Crimmins et al.	156/440 X

FOREIGN PATENTS OR APPLICATIONS

440,191	12/1935	Great Britain	156/439
209,771	12/1966	Sweden	156/439

Primary Examiner—Robert R. Mackey

Attorney—Karl F. Ross

[57] **ABSTRACT**

A filamentary web intended to be imbedded in a synthetic-resin sheet is made by inserting a succession of weft or transverse filaments into a continuously moving warp of longitudinal filaments at a web-forming location at which the web is compacted between rollers drawing the filaments into a compression gap. These weft filaments are drawn from a plurality of separate spools on a rotating turntable or disk whose threads are fed through guides on a continuously moving conveyor belt and whose thread ends are held in clips on a second belt similar to the first and forming with the first a V open toward the web-forming location so that the weft threads are drawn out transversely to the warp as they are moved into the compression gap. Small heated wires at the web-forming location serve to cut off the individual weft filaments while apparatus is provided at the apex of the V to reengage the free end of each thread in its clip.

4 Claims, 6 Drawing Figures

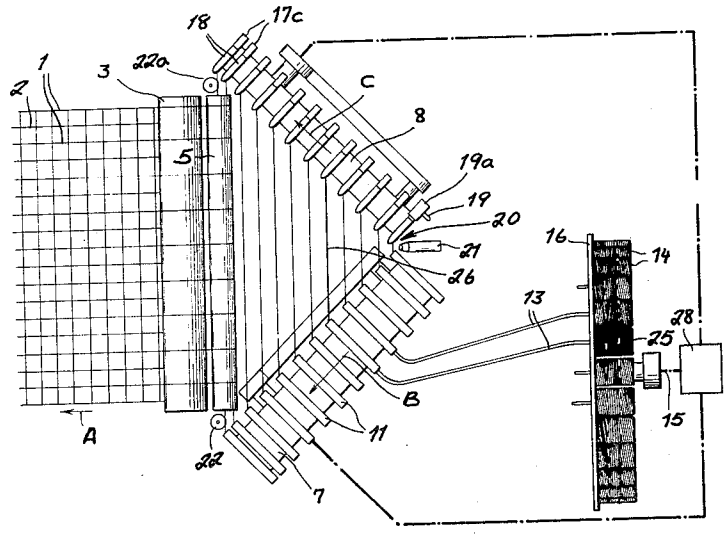

PATENTED FEB 8 1972

3,639,954

SHEET 1 OF 2

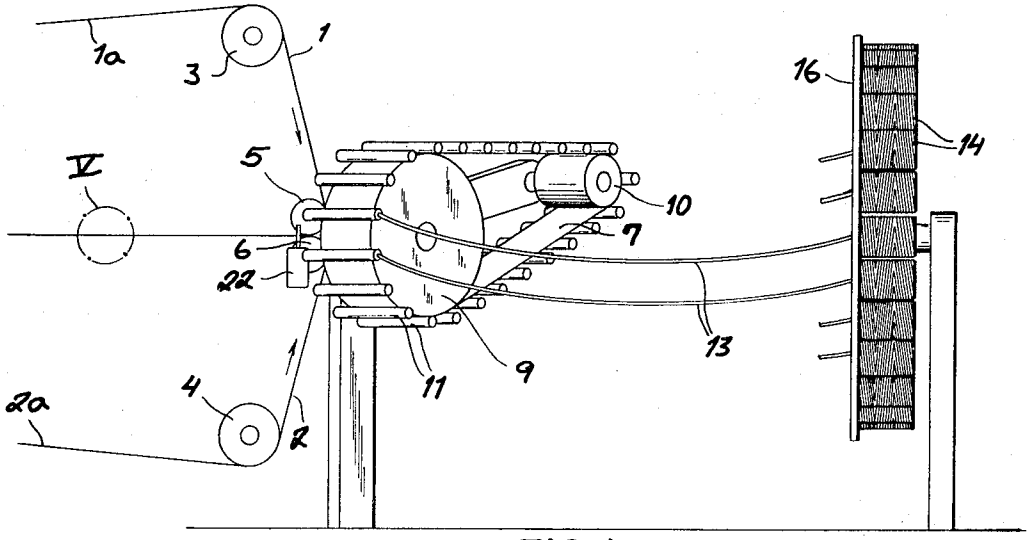

FIG. 1

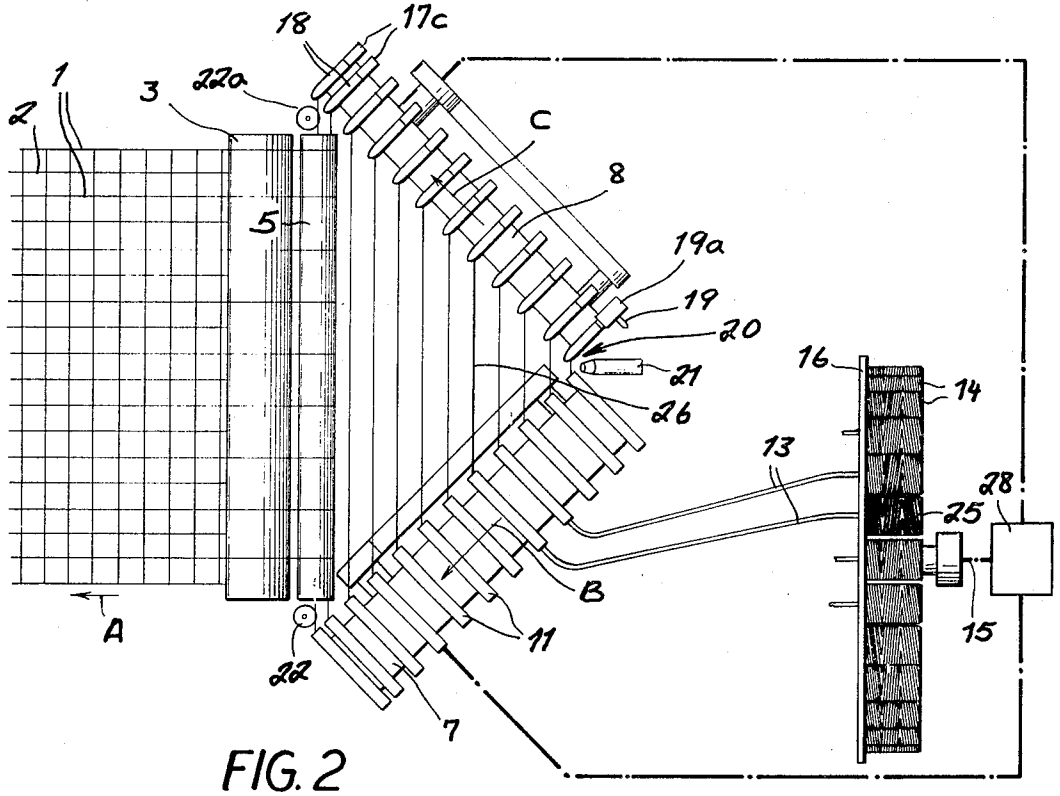

FIG. 2

INVENTORS:
Horst Kirzinger
Alfons Kirzinger

BY

Karl G. Ross
Attorney

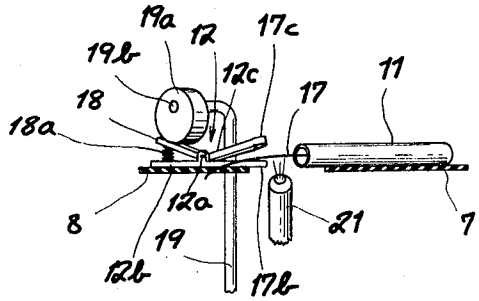

FIG. 4

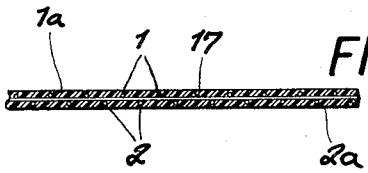

FIG. 5

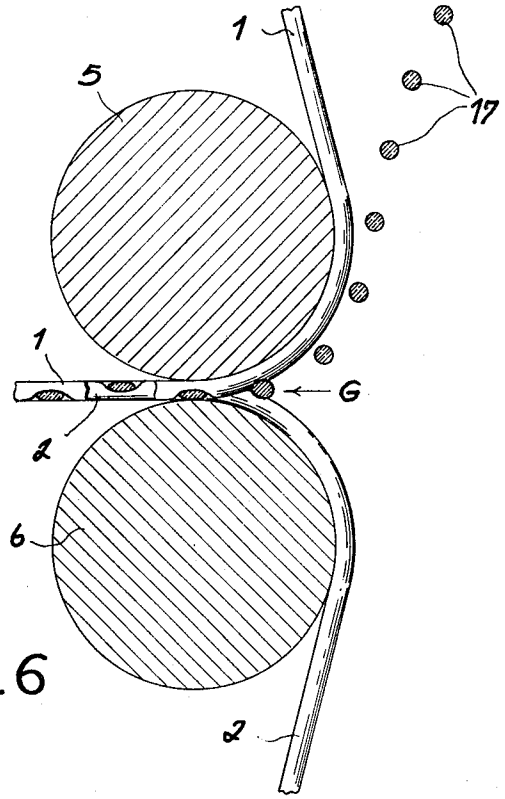

FIG. 6

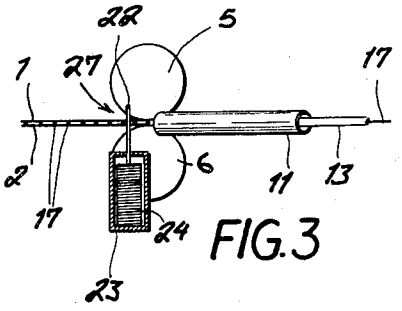

FIG. 3

Horst Kirzinger
Alfons Kirzinger
INVENTORS.

BY

Karl G. Ross
Attorney

APPARATUS FOR MAKING A REINFORCED WEB

FIELD OF THE INVENTION

The present invention relates to a method of and an apparatus for making a filamentary web, and, more particularly, to a system for the formation of an openwork web intended to be imbedded in, coated with or to have its interstices penetrated by a synthetic resin as a reinforcement for a synthetic resin body.

BACKGROUND OF THE INVENTION

A web adapted to be used as a reinforcing layer in synthetic resin bodies usually consists of arrays of warp and weft filaments which intersect at right angles (i.e., are mutually orthogonal) and which may not be tightly interwoven as in conventional textiles. The filaments or threads may simply overlie one another and depend on the material in which they are imbedded to hold them together.

It is the conventional procedure, even in the manufacture of these webs, to form the warp, as in tightly woven fabrics, by feeding the filaments from a warp beam over a roller at a constant rate. The weft filaments, however, are simply laid in the warp at some location, prior to imbedding the two in a common mass, to form the finished product. The we is imbedded by spraying it with plastic, extruding a mass around it, compressing a foil or foils around it or by dipping the fabric in a liquid resin or calendering the resin onto the fabric. The means for placing these weft filaments includes, in one prior-art machine, an arm which swings back and forth across the warp, laying at each pass one or more weft threads. In another embodiment, a rotating supply disk serves to mount the thread-storage spools and to deposit the weft threads therefrom.

These arrangements do not allow a wide web to be made readily. The swinging arm can, indeed, be adapted to make a wide web, but only by slowing down the entire manufacturing process greatly since the inertia of the device must be constantly overcome as the arm is reversed in direction. The rotating disk arrangement relies on a circular arc which cannot be effectively used for wide spans. In both cases, however, the primary objection is that the apparatus must be inordinately large and bulky.

OBJECTS OF THE INVENTION

It is, therefore, an object of the present invention to provide an improved apparatus for making a web, e.g., for incorporation in a body of a hardenable material such as a synthetic resin.

A more specific object is to provide an improved apparatus which can rapidly make a web of relatively great width.

It is another object of our invention to provide an improved apparatus for making openwork webs of filamentary materials, and bodies incorporating same, wherein the aforementioned disadvantages are obviated, the system requires less space than heretofore and less expensive equipment, the web is of higher quality and is produced at higher speeds than with earlier systems, and it is possible to accommodate threads of different materials, thicknesses, quality and color, and to interchange threads, with ease

SUMMARY OF THE INVENTION

The above objects are attained, in accordance with features of the present invention, by a web-making apparatus wherein a guide means, which lays the weft filaments in the warp, diverges toward the forming location and has a rectilinearly movable member which holds these filaments. This member is preferably in the form of at least one endless belt extending at an angle to the warp and carrying, at spaced intervals, a plurality of thread holders which each hold one filament.

According to another feature of the present invention, a pair of such belts are provided, one with equispaced clips, and one with equispaced thread guides. Both belts are inclined to the warp and form a triangle with the warp-forming roller, each belt being one side thereof and the roller being the base. This triangle is isosceles and, preferably, equilateral.

In accordance with yet another feature of the present invention, a plurality of spools of thread are held on a rotatable supply disk which is rotatably driven synchronously with the two belts. Flexible conduits extend from the disk to one of the belts, connecting each spool with one of the guides.

Cutting means for forming a neat selvage or edge on the web is provided in the form of a pair of very hot wires one to each end of the roller at the forming location. As each weft filament comes up to this location it is cut thereby. The hot wires, which sever the threads (e.g., glass filaments) have an advantage over shearing devices or blades in that the latter are rapidly blunted when mineral fibers are used.

According to another feature, the clips are opened at the apex of the triangle and, while they are briefly held in this open condition, a new thread is blown in between their jaws. Thus, as the two belts diverge toward the forming location, the thread is pulled by the clips through the guides and from the spools and held perfectly in line, until it is cut off by the hot wires as it is laid into the warp.

In accordance with yet another feature, two spaced rollers are provided at the forming location to compress the fabric as the weft is laid into the web-forming gap. Every other warp thread is fed over the upper roller and the others over the under one so that the weft threads are fed in between these two arrays of warp threads, the arrays being transversely shifted by half the distance (pitch) between two threads of an array.

DESCRIPTION OF THE DRAWINGS

The above and other objects, features, and advantages will become apparent from the following description, reference being made to the accompanying drawing, in which:

FIG. 1 is a side perspective view of the apparatus according to the present invention;

FIG. 2 is a top view of the apparatus shown in FIG. 1;

FIG. 3 is a side view of a detail of the apparatus of FIG. 1, in enlarged scale;

FIG. 4 is a detail view of the apparatus, in enlarged scale;

FIG. 5 is a section through a detail of a finished web embedded in synthetic resin as indicated by the dot-dash circle V of FIG. 1; and

FIG. 6 is a diagram of the path of the weft as it is laid in the warp.

SPECIFIC DESCRIPTION

FIGS. 1 and 2 show a machine which forms a web of warp threads or filaments 1 and 2 and weft threads or filaments 17. The warp threads 1 come from a warp beam and are spanned first over a roller 3 then a roller 5. The other warp filaments 2 come up from below over a roller 4 and then over another roller 6 forming a gap 27 (see FIG. 3) with the roller 5. Thence the threads 1 and 2 are drawn out together in a direction A along a transport path away from this gap 27.

The weft threads 17 originate from a plurality of spools 14 mounted on spindles on a rotating disk 16 carried by a drive shaft 15. Each thread 17 goes from its respective spool through the disk and then through a flexible rubber tube 13 to a tubular guide element 11 on a belt 7. This belt 7 carries a plurality of these elements 11 spaced equally apart and is itself mounted on two drums 9 and 10.

A similar belt 8 forms an equilateral triangle with the belt 7 and the rollers 5 and 6. A drive motor 28 is connected to both belts 7 and 8 and to the disk 16 so that they all turn synchronously; that is, all at essentially the same rate in revolutions per unit time.

The belt 8 carries, as best shown in FIG. 4, a plurality of clips 12 spaced the same as the guides 11 of the belt 7. Each clip 12 comprises a lower fixed element 12*b* on which is pivoted at 12*a* an upper pivotal element 12*c*. The upper ele-

ment 12*c* has an extension 18 which is urged upwardly by a stiff compression spring 18*a* to clamp a thread 17 between the clip's jaws 17*b* and 17*c*. As the clip 12 rises up in the region 20 of closest approach between the belts 7 and 8 the extension engages a disk 19*a* having an offcenter pivot 19*b* on a rod 19 so that these jaws are opened. A jet from a compressed air nozzle 21 blows the thread 17 in between these jaws.

As shown in FIGS. 2 and 3, adjacent each end of the rollers 5 and 6 is a cutting wire 22 of 22*a*. Each wire 22 or 22*a* is mounted on a heating coil 24 held in a small housing 23 at the ends of the coils.

The device functions as follows:

As the warp 1,2 is fed in the direction A, the two belts 7 and 8 are driven in the directions indicated by arrows B and C, respectively. An end of a weft thread 17 is caught by a clip 12 in the region 20 as described above and, as the belts advance divergingly, is pulled out of the tube 11 and from its respective spool 14. The thread spans across the diverging belts 7 and 8 transversely to the warp 1,2. Once it arrives in the area of these threads 1 and 2, it moves forwardly and downwardly into the gap G (FIG. 6), and is caught between these arrays of warp threads; the end portions are brought into contact with the very hot wires 22 and 22*a* and are severed so that individual weft threads can form part of the finished web.

This operation is repeated with each clip 12 and guide 11. The threads 17 are reloaded into the jaws of the clips 12 prior to being pulled out of the guide 11 on the return stroke in directions B and C.

In order that the above operation be used to make a reinforced synthetic-resin sheet, a thermoplastic film 1*a* is fed in over the threads 1 and a film 2*a* under the threads 2. The rollers 5 and 6 are heated in this case to cause each film 1*a* and 2*a* to flow sufficiently to melt into the other and imbed the filaments 1, 2, and 17. This finished product is illustrated in FIG. 5. Alternatively, the fabric web can be coated with a thermosetting synthetic resin (e.g., an epoxy) by any of the conventional techniques.

As can be seen, the threads 1, 2, and 17 are not actually woven together in the conventional sense with the warp threads passing over and under the weft threads and vice versa. Nonetheless, the weft threads are sandwiched between the warp threads so that a sizable increase in strength is obtained.

The cutting arrangement provided cannot become dull, as in the prior art devices, and is therefore suited to any desired thread material. Adjusting the temperature of the wires 22 and 22*a* according to the material of the weft threads is possible. Even fiberglass or some of the tougher synthetic-resins are easily cut at the high temperature of the rods.

FIG. 2 shows that a spool 25 of thread 26 is provided. This thread 26 is substantially thicker than any of the other weft filaments so that it will serve as a marker on the finished reinforced sheet. In the case of transparent or semitransparent sheets, a thread 26 of different color from the threads 17 may be used. Such a marker is extremely handy when a measured length of the finished product is to be cut off since the marker threads 26 can easily be arranged to fall at intervals of, say, 1 foot or 1 yard.

We claim:

1. An apparatus for making a web comprising:

feed means for advancing a warp along a transport path;

inserting means for depositing a succession of weft filaments into said warp at a web-forming location, said inserting means including:

guide means diverging toward said location and including a pair of rectilinearly movable filament-entraining members for advancing toward said location a succession of weft filaments spanning said guide means transversely of said warp,

supply means for feeding a plurality of weft filaments to said guide means at a second location remote from said web-forming location, said members having a region of closest approach corresponding to said second location and a region widest spread corresponding to said web-forming location, one of said members being provided with a succession of spaced filament-end-retaining devices and the other of said members being provided with a succession of spaced thread guides, each of said filament-end-retaining devices including a clip,

means including a compressed air jet at said second location for engaging said filaments in said clips;

means for temporarily opening said clips in said second location, both of said members being endless conveyors and said supply means including a rotatable element carrying a plurality of filament-storage spools and a plurality of flexible conduits extending each from a respective one of said spools to a respective one of said thread guides, said conveyors being of substantially equal length and inclination to said warp;

means for synchronously driving both of said conveyors and said element; and

means adjacent said web-forming location for severing said weft filaments as they are laid into said warp including a heated wire adjacent said web-forming location and engageable with said weft filaments.

2. An apparatus for making a web comprising:

means for advancing a warp along a transport path;

a pair of endless conveyor bands at an upstream portion of said path, said conveyor bands each having an upper stretch moving generally in the direction of said path and divergent from one another in said direction, and a respective return stretch running toward a convergent location upstream of said path;

a succession of filament guides formed in spaced relation on one of said bands and a multiplicity of filament clamps in spaced relation on the other of said bands and individual to the respective guides, whereby respective threads traverse each guide and are receivable in the clamp individual thereto for spanning each thread across said transport path and the warp as said bands advance divergently toward said path;

a rotatable disk having an axis offset from the axes of said bands and provided with a plurality of spools for delivering respective threads, said disk being independent of and spaced from said bands, said bands having a region of closest approach remote from said transport path and being driven to juxtapose each guide with the respective clamp for engagement of a thread end traversing the guide in the associated clamp, said bands having a region of greatest spread wherein the bands flank said transport path and the warp thereon;

and means for synchronously driving both of said bands and said disk.

3. The apparatus defined in claim 2, further comprising respective flexible conduits fixed to said disk and to the respective guides for conducting the individual threads from said spools to the corresponding guides.

4. The apparatus defined in claim 3 wherein each of said clamps is an individual clip having a pair of jaws engaging the respective thread between them, and means proximal to said transport path for opening said jaws.

* * * * *