Feb. 3, 1959 A. J. BUCHTENKIRCH 2,872,627

ROTARY MAGNETIC ACTUATORS

Filed Dec. 28, 1954

2 Sheets-Sheet 1

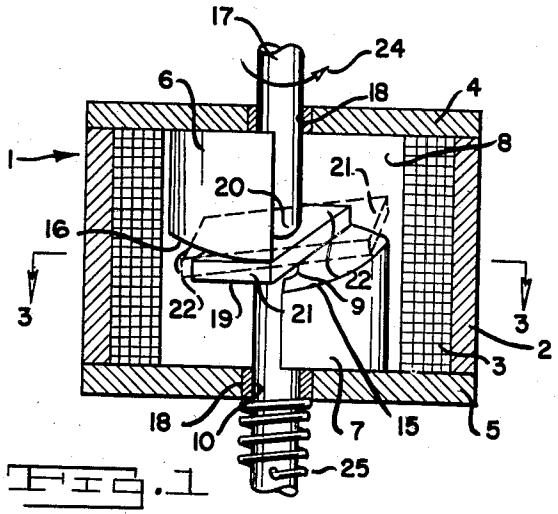

Fig. 1

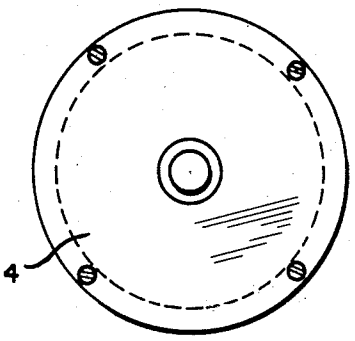

Fig. 2

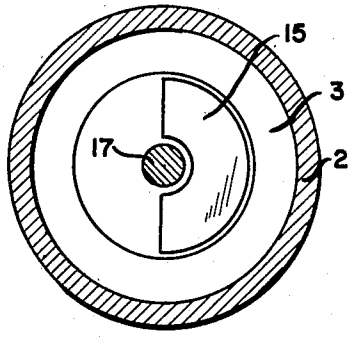

Fig. 3

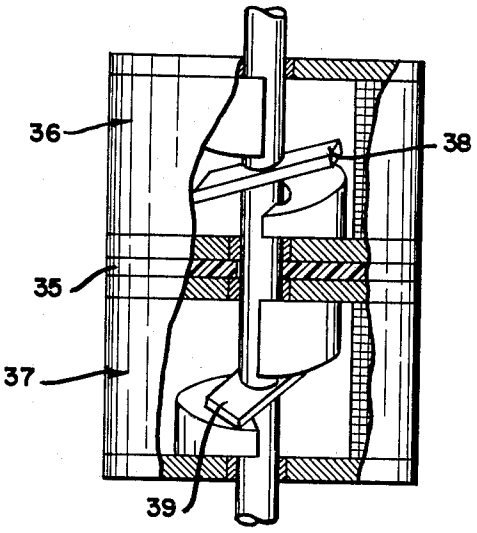

Fig. 5

Fig. 4

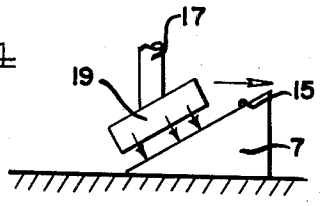

INVENTOR.

ARTHUR J. BUCHTENKIRCH

BY

Bernard J. Cantor

Attorney

Feb. 3, 1959 A. J. BUCHTENKIRCH 2,872,627

ROTARY MAGNETIC ACTUATORS

Filed Dec. 28, 1954

2 Sheets-Sheet 2

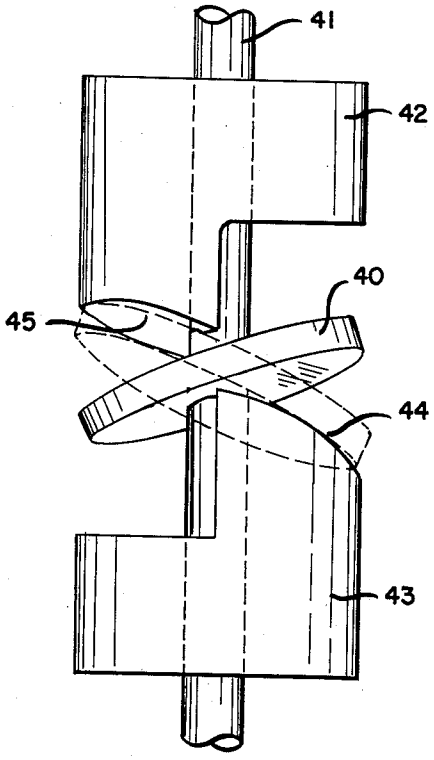

Fig. 6

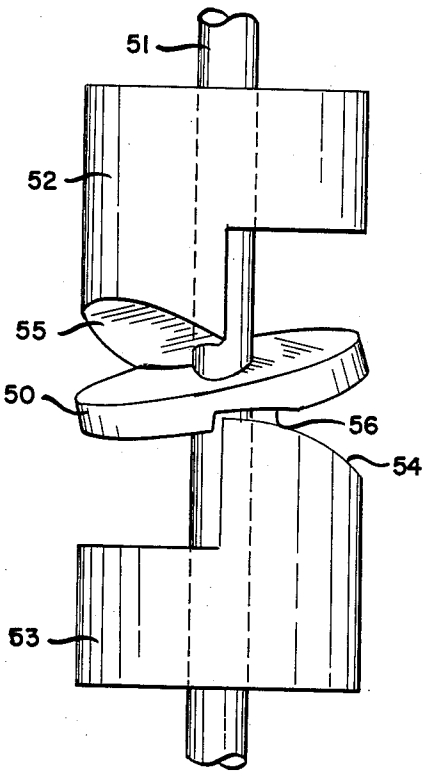

Fig. 7

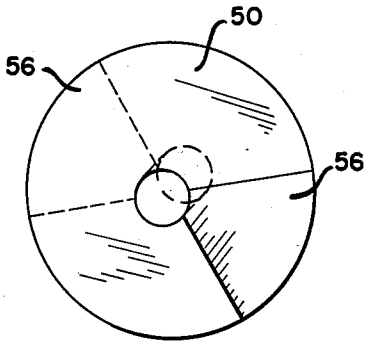

Fig. 8

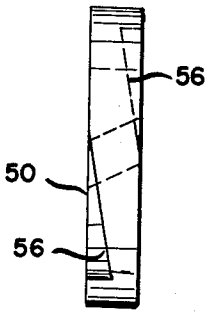

Fig. 9

INVENTOR.
ARTHUR J. BUCHTENKIRCH
BY
Bernard J. Cantor
Attorney

United States Patent Office 2,872,627 Patented Feb. 3, 1959

2,872,627

ROTARY MAGNETIC ACTUATORS

Arthur J. Buchtenkirch, Glen Cove, N. Y., assignor to North Atlantic Industries, Inc., Glen Cove, N. Y.

Application December 28, 1954, Serial No. 477,979

11 Claims. (Cl. 317—197)

This invention relates to a rotary magnetic actuator and more particularly, to an electromagnetic device which rotates a shaft through a limited angle with or without an applied load.

A device of this character is suitable for providing a power output which can be used to operate switches, latches, valves, clutches or the like. This type actuator is also capable of delivering a torque output through a limited rotation for a large number of electrical and mechanical purposes.

There are many types of rotary magnetic actuators which have been commercially available. These actuators have had numerous disadvantages in operation, among which were inefficient conversion of electrical energy into available torque at the output shaft, and susceptibility to linear accelerating forces. Moreover, the conventional type actuators have been difficult, and accordingly, expensive to fabricate and assemble.

Thus, it is an object of my invention to provide a magnetic actuator wherein maximum starting torques are available at the output shaft during any operation of such actuator.

Another object of my invention is to provide a rotary magnetic actuator having a rotatable armature balanced between two opposed magnetic pole pieces whereby the magnetic force produces a turning couple upon said armature, and axial thrust upon said armature is substantially eliminated.

Yet another object of my invention is to provide a rotary magnetic actuator, including magnetic pole pieces having inclined faces, and an armature having inclined faces corresponding to said pole piece faces, whereby said armature will tend to rotate to reduce the air gap between said pole and armature faces.

A further object of my invention is to provide a rotary magnetic actuator, including opposed magnetic pole pieces having inclined faces, and an armature having corresponding inclined faces so shaped as to minimize the reluctance caused by air gaps, whereby a maximum conversion of electrical energy into available torque is accomplished.

Still a further object of this invention is to provide a rotary magnetic actuator having a minimum number of parts and wherein said parts are inexpensive to fabricate and assemble.

These and other objects and advantages will become apparent upon reading the following description of which the attached drawings form a part.

Referring to the drawings, in which:

Figure 1 is a cross-sectional view of an actuator embodying my invention.

Figure 2 is a top view of Figure 1, and

Figure 3 is a cross sectional view taken on line 3—3 of Figure 1.

Figure 4 illustrates the magnetic forces and resultant torques upon the armature and pole pieces.

Figure 5 shows a two unit device arranged back to back.

Figure 6 shows a second type armature suitable for use in this actuator, and

Figure 7 is a view of a third type armature mounted between magnetic pole pieces.

Figure 8 is a plan view of the armature of Figure 7, and

Figure 9 is a front view of such armature.

This device is essentially a limited rotation mechanism wherein rotation of an armature and an attached output shaft will occur until the armature and pole faces interfere with one another or until some mechanical stop means is operated.

In Figure 1 there is shown a construction which illustrates the application of my invention. Here, a magnetic structure, broadly designated as 1 is formed of a cylindrical frame member 2 within which a magnetic winding 3 is inserted. On the open ends of said frame, caps 4 and 5 are secured by means of welding, bolts, screws or some other suitable fastening means.

Permanently affixed to each of these caps are magnetic pole pieces 6 and 7. The entire magnetic structure above described is formed of a magnetizable material.

As illustrated in Figure 1, the pole pieces are shaped to fit within the central opening 8 of the magnetic winding and in addition are each provided with a bored portion 9 aligned with openings 10 bored in the center of each of caps 4 and 5.

The pole pieces are vertically and horizontally offset from one another, as seen in Figure 1, and each pole piece has an inclined pole face, 15 and 16 respectively. The angle of inclination is the same for each pole face. The actual angle selected may vary depending upon the torque desired and the speed of armature response and armature rotation desired. The angle illustrated in the drawings is roughly 30° from the horizontal, but the actuator is not limited to this angle. Experiments show that torque increases with a decreasing angle and therefore, the exact angle selected would depend upon the torque response desired.

A rotatable non-magnetic output shaft 17 is inserted through cap openings 10, and is held within bushings 18 located in said cap openings. The purpose of these bushings are to position the shaft against lateral and horizontal motion and at the same time reduce friction between the shaft and caps. If desired ball bearings or other suitable bearings may be substituted for these bushings to reduce friction still further.

An armature 19 formed of a flat bar of magnetically responsive material, such as iron, is centrally located upon said shaft. This armature is provided with a hole 20 drilled at an angle to the armature top and bottom surfaces. The shaft 17 is snugly inserted through hole 20 whereby the armature is cocked at an angle relative to horizontal and forms a pair of arms 21 and 22 positioned at nearly the same angle as are the faces 15 and 16 of the pole pieces. The armature is permanently fixed to said shaft.

In operation, current is supplied from an electrical power source (not shown) to energize the winding 3. This current may be a continuous D. C., but normally a short duration electrical impulse is supplied. At the start, the armature 19 is in its normal or neutral position, as shown in dotted lines in Figure 1, with one arm 21 slightly overlapping the edge of pole piece face 15 and conversely the other arm 22 slightly overlapping the edge of pole face 16.

The pole pieces are arranged so that one becomes a north pole and the second the south pole. Assuming the pole piece 6 to be the north pole (although this may be reversed if desired), the path of flux will be through the pole piece 6, through the air gap and into armature arm 22, thereafter, through the armature arm 21, across the

air gap and to pole piece 7. The magnetic forces set up are such as to reduce the air gaps between the armature arms and the pole faces to zero. Therefore, the armature tends to rotate until the air gap becomes zero. The shaft 17 rotates in the direction of the arrow 24 until there is interference between the pole faces and shaft or until the minimum air gap is reached where the armature is so designed as to avoid interference with the pole pieces.

As is apparent, the pole pieces may be arranged so that the device will operate either as a left handed rotational device or a right handed rotational device.

In many applications a mechanical stop or detent may be provided on the shaft to stop rotation at some predetermined point. Moreover, when desired a ratchet device or ball or detent device or the like (not shown) may be provided on the shaft to hold the shaft in rotated position until such time that the shaft is released.

To return the shaft and armature to its normal unrotated position, a spring 25 or some other suitable resilient means is provided.

The pole faces 15 and 16 may, if desired, be slightly concave or convex, although this shape would be more expensive to manufacture. One means of controlling the torque versus rotational angle characteristic is by proper shaping of the pole faces. The exact shape chosen depends upon the characteristic desired. This is because the best linearity of the torque versus rotational angle characteristic is obtained when the magnetic circuits in the actuator are operating in the saturated condition. Thus, changing the shape of the air gap by shaping the pole faces will alter the shape of the torque-rotation characteristic.

Likewise, the armature may be made in a number of different forms designed to produce the same general results. The faces of the armature arms 21 and 22 adjacent the pole faces may be curved or helically shaped.

Also, it is contemplated to provide a second magnetic structure aligned with the first structure above described and a second armature upon shaft 17, wherein each of said magnetic structures operate in opposite directions. In this manner the device may be operated to open and close a switch or some such similar mechanism. In addition, this two unit device may be used as a differential mechanism.

An example of this type structure is shown in Figure 5. In this device an insulator plate 35 separates magnetic structures 36 and 37. Each of these structures are the same as that shown in Figure 1, hereinabove, with the exception that structure 37 is reversed. In addition, two armatures 38 and 39 are provided.

Another form of armature is illustrated in Figure 6 wherein a disk 40 is mounted upon a shaft 41 by means of a hole drilled at an angle through the disk. Thereby, the disk is cocked at an angle relative to the shaft. This disk or armature 40 is positioned between two pole pieces 42 and 43. These pole pieces have curved faces 44 and 45 in the same manner as do the pole pieces shown in the modification of Figure 1.

Yet a second modification of the disk type armature shown in Figure 6 is illustrated in Figure 7. Here, a disk 50 is mounted on an angle relative to a shaft 51. This disk is also located between pole pieces 52 and 53 having inclined pole faces 55 and 54 respectively. In this case, the armature is provided with a relieved portion 56. This relieved area, permits the armature to rotate approximately 90° relative to the pole pieces before the armature abuts against the pole piece face. It is contemplated that both the upper and lower sides of the disk will be relieved in the manner shown in Figure 8.

Referring again to Figure 6, when the armature 40 rotates it reaches a point where it strikes the pole piece face 44 and 45. In order to extend the angle of rotation it is possible to cut away small portions of the pole piece faces which would normally abut against the armature.

In this manner, the armature may rotate a greater distance before it strikes the pole piece faces. This modification is not illustrated since it is believed to be adequately explained above.

My novel rotary actuator provides advantages not previously obtainable. Thus, because the armature is balanced between the split pole pieces 6 and 7, the armature is not affected by linear accelerations, but may only react to turning forces. Further, the split pole pieces located on opposite sides of the armature produce a turning couple upon the armature and eliminates thrust forces along the axis of the shaft.

Moreover, maximum desired torques for any applications are easily available due to the flexibility of design of the pole piece face angles and the armature angles. A high efficiency of operation is also attained due to the low armature inertia and balanced condition of the armature whereby a minimum of energy is necessary to produce rotation. In addition, becaues of the symmetrical construction, magnetics can be utilized all the way around, thereby raising efficiency.

Also, because of the split pole pieces, no ambiguity of armature position exists, and the operation of the device cannot be effected by external stray magnetic fields.

This invention may be developed within the scope of the following claims without departing from the essential features of said invention. Accordingly, it is desired that the foregoing description be read as illustrating merely an operative embodiment of said invention and not in a strictly limiting sense.

I claim:

1. A rotary magnetic actuator comprising a pair of substantially identical pole pieces, each of said pole pieces being cylindrical in shape with one end being cut at an inclined angle to form an inclined surface relative to the axis of the cylindrical pole piece, and approximately one-half of said one end being cut away in an axial direction to provide an approximately one half of an elliptical shaped end surface pole face inclined relative to the pole piece with the inclination of one pole face being opposite to the inclination of the other; each of said pole pieces being centrally bored to provide a journal bearing for a shaft and a shaft journalled in said pole pieces with the two pole faces opposing one another and being positioned on opposite sides of the shaft relative to the shaft axis and spaced apart a predetermined distance axially of the shaft; an armature mounted on the shaft for rotation therewith and positioned in the space between the pole faces and having armature faces, each arranged to simultaneously make surface to surface contact with one of the pole faces when the shaft is rotated in one direction and to be spaced a maximum distance from its respective pole face when the shaft is rotated in the opposite direction, and means for magnetically energizing said pole pieces.

2. A rotary magnetic actuator as defined in claim 1, and said armature being formed of a thin flat plate and being centrally apertured at a predetermined angle relative to the flat surfaces thereof and said shaft extending through said aperture whereby portions of the flat surfaces form said armature faces and are arranged in converging planes relative to their respective pole faces.

3. A rotary magnetic actuator as defined in claim 2 and wherein a portion of each said armature face is relieved by being cut away to provide clearance for greater angular rotation of the armature.

4. A rotary magnetic actuator as defined in claim 2, and said pole faces being chamfered at the highest part relative to the non-cut end of the pole piece to provide clearance for increased angular rotation of the armature.

5. A rotary magnetic actuator as defined in claim 2, and said armature plate being formed in a disk shape with the flat surfaces thereof being substantially parallel to one another and inclined at a predetermined angle relative to the central aperture coinciding with the disk axis.

6. A rotary magnetic actuator as defined in claim 1, and including a second pair of pole pieces and a second armature and identically arranged along the shaft with the exception that the pole faces of the second pair of pole pieces and the armature are inclined in an opposite direction relative to said aforementioned pole piece faces and armature for causing angular movement in the opposite direction when energized.

7. A rotary magnetic actuator having in combination a rotatable shaft, an armature mounted on the shaft for rotation therewith and a pair of pole pieces for magnetically attracting the armature to cause the shaft to rotate; the two pole pieces each having one pole face on one end thereof, with one pole face being on one side of the shaft relative to the axis thereof and the other pole face being on the opposite side of the shaft, each of said pole faces being inclined a predetermined angle relative to the shaft axis with incline of both pole faces being in the opposite direction; said pole faces being spaced apart along the shaft axis and facing each other across the space and each pole face lying in a plane transverse to the axis of the shaft; said armature being mounted on the shaft in the space between the two pole faces and being in the form of a disk-shaped plate having a first armature face on one side thereof formed to overlap and to make surface to surface contact with one of the pole faces and a second armature face formed on the opposite side thereof to simultaneously overlap and make surface to surface contact with the opposite pole face when the shaft is rotated in one direction, and said armature faces being inclined to form an air space between their respective pole faces when the shaft is rotated in an opposite direction, and means for magnetically energizing the pole pieces.

8. A rotary magnetic actuator comprising a pair of identical pole pieces arranged along a rotatable shaft, one on each side of the shaft and offset axially of the shaft relative to each other to provide facing ends spaced apart from one another, each of said ends being cut at an inclined angle relative to the shaft axis to form flat pole faces inclined in opposite directions, an armature in the form of a thin, flat, disk-shaped plate, centrally mounted on the shaft for rotation therewith and positioned in the space between the pole faces with the opposite sides of the plate forming armature faces, with each armature face overlapping a pole face and being inclined relative to the shaft axis to make surface to surface contact with the pole faces when the shaft is rotated in one direction, and forming a maximum air gap with their respective pole faces when the shaft is rotated in the opposite direction, and means for magnetically energizing the pole pieces.

9. A rotary magnetic actuator comprising a shaft, rotatably mounted for rotation about its axis and formed of a non-magnetizable material; two magnetizable pole pieces arranged along the axis of the shaft, each of the pole pieces having a pole face, the pole faces facing each other and being spaced apart from one another a short

distance along the shaft axis, and with the pole faces being on opposite sides of a plane which includes the axis of the shaft; said pole faces each being oppositely sloped in a direction concentric to the shaft axis relative to a plane normal to the shaft axis, the degree of slope being the same for each of the pole faces; an armature positioned in the space along the shaft axis between the two pole faces and centrally secured to the shaft for rotation therewith, the armature being formed with two armature faces, one facing and overlapping one of the pole faces and the other facing and overlapping the other pole face, the armature faces being sloped similarly to their respective pole piece faces, but with the slope of the armature faces intersecting the pole faces at opposing points on each of the pole faces, and means to magnetically energize the two pole pieces, wherein the two armature faces tend to rotate to reduce the air gap between them and their respective pole faces, thereby rotating the armature and shaft to the point where the pole faces interfere with the armature faces.

10. A rotary magnetic actuator comprising a shaft, rotatably mounted for rotation about its axis and formed of a non-magnetizable material; two magnetizable pole pieces arranged along the shaft axis and each having a pole face, the pole faces facing towards each other and being spaced apart from one another a short distance along the shaft axis, and the pole faces being offset approximately 180° from one another around the shaft axis, said pole faces each being oppositely sloped in a direction concentric to the shaft axis relative to a plane normal to the shaft axis with the degree of slope being substantially the same for each pole face; an armature positioned in the space along the shaft axis between the two pole faces and being in the form of a thin, flat, disk-shaped, plate centrally secured to the shaft, but with the axis of the disk being non-parallel with the shaft axis, although intersecting the shaft axis at the center of the disk, one face of the disk being arranged to overlap one pole face and the other face of the disk being arranged to overlap the other pole face and with the path of rotation of the two disk faces being approximately the same as the slope of the pole faces, with the slope of said disk faces being such that in their non-rotated position the disk-faces are spaced a maximum distance from the pole faces and in their fully rotated position the disk faces make face to face contact with their respective pole faces.

11. A construction as defined in claim 9 and said disk faces being partially relieved for greater rotation of the disk before contact with the pole faces is made.

References Cited in the file of this patent

UNITED STATES PATENTS

541,471	Corey	June 25, 1895
2,289,227	Walker	Dec. 28, 1954
2,706,756	Brewer	Apr. 19, 1955
2,767,357	Naybor	Oct. 16, 1956