(No Model.) 2 Sheets—Sheet 1.

E. M. PINE.

BALING PRESS.

No. 456,057. Patented July 14, 1891.

FIG. II.

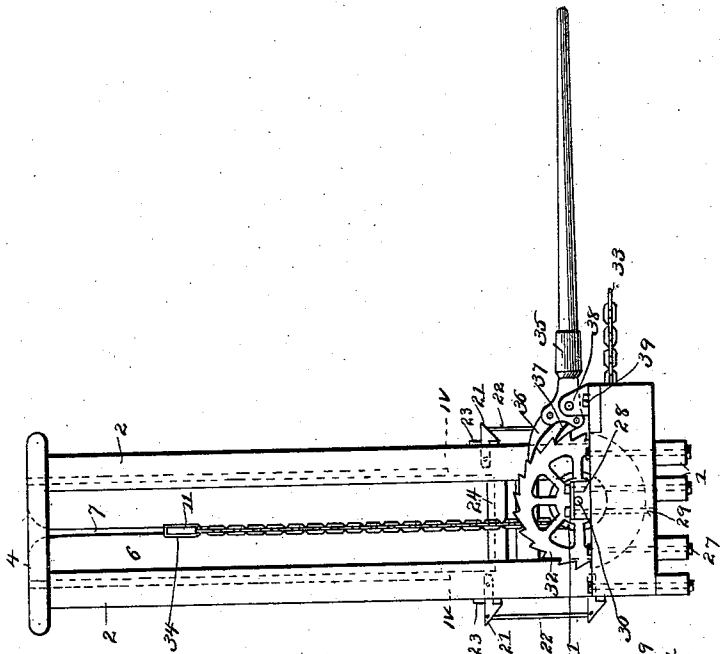

FIG. I

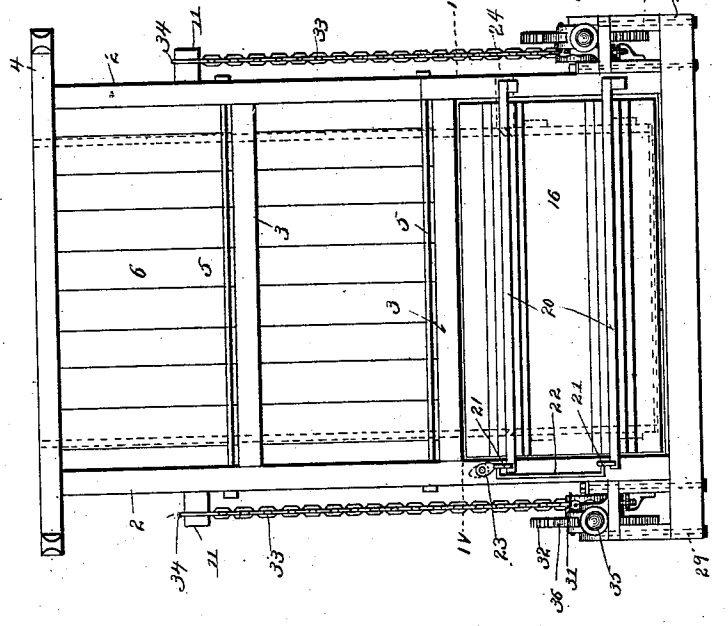

Witnesses:
Harry S. Rohrer.
Walter Allen

Inventor:
Edwin M Pine.
By. Knight Bros.
Attorneys

THE NORRIS PETERS CO., PHOTO-LITHO., WASHINGTON, D. C.

(No Model.) 2 Sheets—Sheet 2.

E. M. PINE.

BALING PRESS.

No. 456,057. Patented July 14, 1891.

FIG. III.

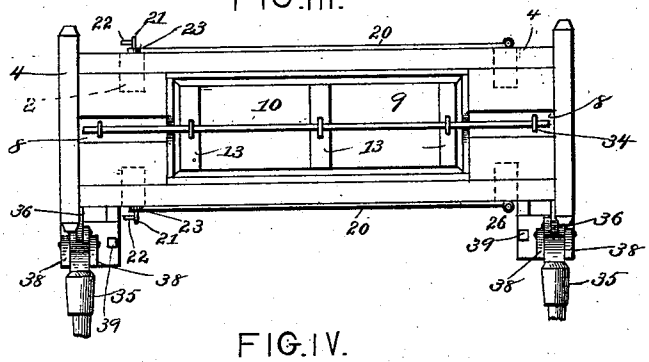

FIG. IV.

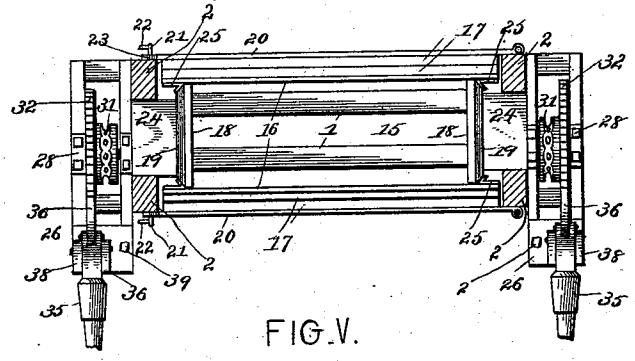

FIG. V.

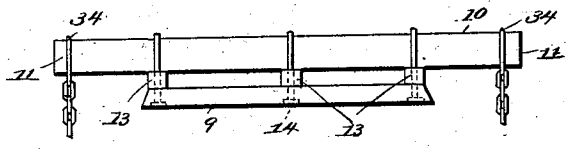

FIG. VI.

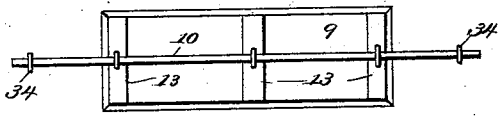

Witnesses:
Harry S. Rohen
Walter Allen

Inventor:
Edwin M. Pine
By. Knight Bros
Attorneys.

THE NORRIS PETERS CO., PHOTO-LITHO., WASHINGTON, D. C.

UNITED STATES PATENT OFFICE.

EDWIN M. PINE, OF PUYALLUP, WASHINGTON.

BALING-PRESS.

SPECIFICATION forming part of Letters Patent No. 456,057, dated July 14, 1891.

Application filed November 25, 1890. Serial No. 372,616. (No model.)

To all whom it may concern:

Be it known that I, EDWIN M. PINE, a citizen of the United States, residing at Puyallup, in the county of Pierce and State of Washington, have invented certain new and useful Improvements in a Hop-Baling Machine, of which the following is a specification.

My invention relates to a machine for packing hops by hand power.

My improvement consists in the novel features of construction hereinafter described and claimed.

In order that my invention may be fully understood, I will proceed to describe it with reference to the accompanying drawings, in which—

Figure I is a front elevation of my improved baling-press. Fig. II is a side elevation thereof, showing the double latch. Fig. III is a top view of the same. Fig. IV is a horizontal section on the line IV IV, Figs. I and II. Fig. V is a side elevation of the follower-beam. Fig. VI is a top view of the follower.

1 are the horizontal sills, 2 are the uprights, 3 are the cross-beams, and 4 the platform, of the main frame. The uprights are secured together by tie-rods 5. 6 is the press-box, having vertical openings 7 at the sides thereof and supported by the uprights. The platform is formed with openings 8, one at each side of the press-box. Within the latter is fitted a follower 9, secured to a beam 10, whose ends 11 project through the vertical openings of the press-box and pass through the openings in the platform. The follower is secured to the beam by straps 12, passing through battens 13 and through the follower and fastened by nuts 14.

15 is the baling-chamber, formed by the doors 16, strengthened by battens 17, and removable side pieces 18, strengthened by battens 19. The doors are supported on bars 20, hinged at one end, and are secured at the other end by means of two latches 21, pivoted to the side of the press and engaging their ends. The latches are coupled together by means of a handle 22, and are locked in engagement with the bars 20 by means of buttons 23, pivoted eccentrically over the upper latches. The tops of the side pieces of the baling-chamber are beveled to fit the lower ends of the side pieces of the press-box, which are correspondingly beveled, and are held in place by backing-blocks 24. The side pieces are also held in position by means of angle-brackets 25 on the doors engaging with the beveled ends of their battens 19.

Supported on the projecting portions of the sills are blocks 26, rigidly secured to the sills by means of the bolts 27. Surmounting these blocks are bearings 28, secured by bolts 29 to the blocks.

Mounted on and preferably bolted rigidly to the bearings are shafts 30. Each shaft has loosely mounted thereon a combined sprocket-wheel 31 and ratchet-wheel 32, which may be cast integral.

33 are chains, each secured by means of a large link 34 to the end of the follower-beam and adapted to fit the recesses and pins of the sprocket-wheel, so as to be drawn around the latter for causing the follower to press the contents of the box down into the baling-chamber. Each shaft carrying a sprocket-wheel and a ratchet-wheel is rotated by means of a lever 35, having double pawls 36 37, and is journaled in cheek-plates 38, secured to an outer block by means of bolts 39.

Having thus described my invention, what I claim as new, and desire to secure Letters Patent for, is—

1. The combination of the sills 1, the uprights 2, the cross-beams 3, the platform 4, having end openings 8, the press-box 6, having the baling-chamber 15 and vertical openings 7 at the sides, the doors 16, the side pieces 18, the beam 10, having ends 11 projecting through the vertical openings, the follower, the beam 10, the blocks 26, the bearings 28, the shafts 30, the combined sprocket and ratchet wheels 31 32, loosely mounted on the shafts, the chains 33, having links 34 secured to the ends of the follower-beam and passed around the sprocket-wheels, the cheek-plates 38, and the levers 35, having double pawls 36 37 and journaled in the cheek-plates, substantially as described.

2. The combination of the sills 1, the uprights 2, the cross-beams 3, the press-box 6, having the baling-chamber 15, the removable side pieces 18, having the battens 19 formed

with beveled ends, and the doors 16, having angle-brackets 25 engaging the beveled ends of the battens, substantially as described.

3. The combination of the sills 1, the uprights 2, the cross-beams 3, the press-box 6, having the baling-chamber 15, the doors 16, having bars 20 hinged at one end and projecting beyond the doors at the other end, the latches 21, pivoted to the side of the press, handles 22, by which the latches are coupled together, and the eccentrically-pivoted buttons 23 over the latches, substantially as described.

4. The combination of the sills 1, the uprights 2, the cross-beams 3, the press-box 6, having the baling-chamber 15 and sides formed with beveled lower ends, the side pieces having beveled tops, the backing-blocks 24, and the doors 16, substantially as described.

5. The combination of the sills 1, the uprights 2, the cross-beams 3, the press-box 6, having the baling-chamber 15 and sides formed with beveled lower ends, the removable side pieces 18, having beveled tops, and the battens 19, formed with beveled ends, the backing-blocks 24, and the doors 16, having angle-brackets 25 engaging the beveled ends of the battens, substantially as described.

Dated this 8th day of August, 1890.

E. M. PINE.

Attest:

A. A. KNIGHT,

H. M. MUMFORD.