A. L. GRINNELL.

Gate.

No. 51,940. Patented Jan'y 9, 1866.

Fig. 1.

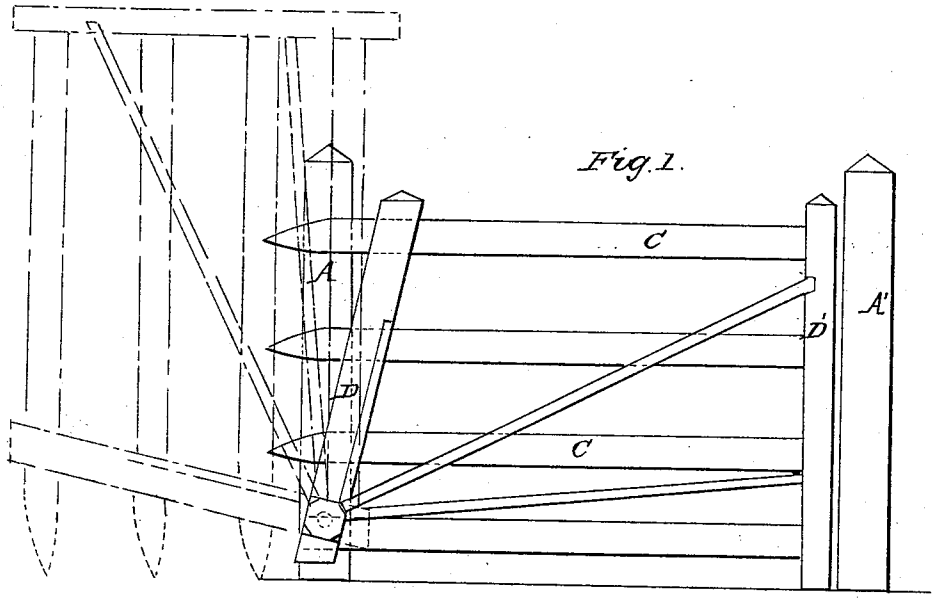

Fig. 2.

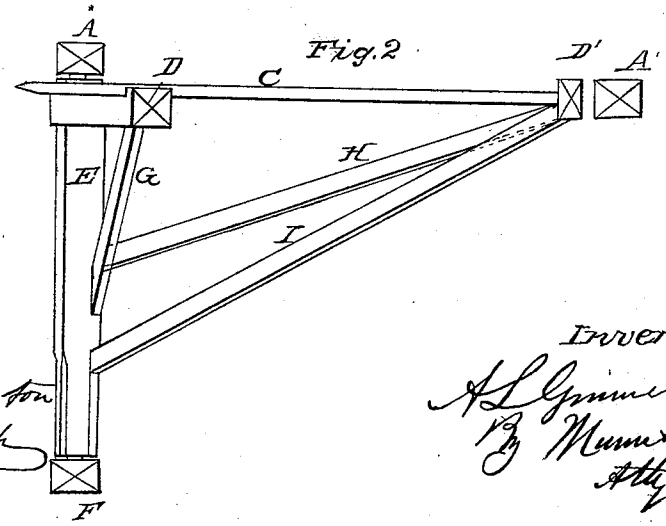

Witnesses;
D. P. Livingston
Gustave Dieterich

Inventor
A. L. Grinnell
By Munn & Co
Atty

N. PETERS. Photo-Lithographer. Washington, D. C.

UNITED STATES PATENT OFFICE.

A. L. GRINNELL, OF DES MOINES, IOWA.

IMPROVEMENT IN GATES.

Specification forming part of Letters Patent No. **51,940**, dated January 9, 1866.

To all whom it may concern:

Be it known that I, A. L. GRINNELL, of Des Moines, county of Polk, and State of Iowa, have invented a new and Improved Gate; and I do hereby declare that the following is a full, clear, and exact description thereof, which will enable those skilled in the art to make and use the same, reference being had to the accompanying drawings, forming part of this specification, in which—

Figure 1 is a side elevation of my gate. Fig. 2 is a plan or top view of the same.

Similar letters of reference indicate corresponding parts.

My invention consists in so constructing and mounting a gate upon a rock-shaft that the same can be readily opened by turning it from a horizontal to a vertical position, and thus leave the passage-way entirely clear, and which can be closed by again throwing it in a horizontal position, as will be presently described.

To enable others to understand my invention, I will now proceed to describe it.

A A′ represent the posts at either end of the gate, which are set in the usual manner.

C C are the slats of the gate, and D D′ the battens or uprights for supporting and connecting the gate-rails in the usual or any suitable way. These slats (as many as desired) extend through the post D, and have their ends pointed, and they rest upon the ground when the gate is opened. By having them pointed they more effectually clear the way when snow is upon the ground. The upright D, instead of being vertical, is set at an angle relatively to the rails—that is, the top leans forward. This position of the upright facilitates the operation of opening and closing the gate, as can be readily understood.

E (refer to Fig. 2) is a shaft, which is made of a suitable length, and arranged to revolve, its journals at one end being set into the post A of the fence and at the other end in a short post, F, set into the ground in line with the post A, for that especial purpose. To this shaft the upright D is secured by mortising or otherwise, and from near the top of the upright D a support or brace, G, extends down to the shaft E. Two other braces, H I, extend from the shaft E to the post A′, as shown in Fig. 1.

To operate the gate it is merely necessary to throw it upward, when it will be in the position shown in red in Fig. 1, and to do this not much exertion is necessary, for the gate is well balanced and operates easily; and to close the gate it is merely necessary to start it in a downward direction and let it fall itself, or ease it with the hand while descending.

The drawings show a single gate; but it is obvious that two can be employed for a carriage-way, the two gates, of course, opening in opposite directions—that is, one to the right and the other to the left; and these gates, when closed, may be fastened or bolted together in the usual way, if desired.

It will be seen that this gate is very simple in construction, there being no parts likely to get out of order, and it is so mounted that no sagging (which is a great fault with hinged gates) occurs, and it operates as easily as any kind of sliding gate, and is better in many respects.

What I claim, and desire to secure by Letters Patent, is—

1. Mounting a gate upon a shaft so arranged that the gate is opened by turning it up in a vertical, or nearly vertical, position and closed by throwing it in a horizontal position.

2. The combination, with each other, of the post A, shaft E, post F, uprights D D′, slats C, and braces G, H, and I, substantially as shown and described.

A. L. GRINNELL.

Witnesses:

W. MATTHEWS,

JOHN W. LAIRD.