May 2, 1961 E. W. JOHNSON 2,982,825

RINGING MACHINE WITH ADJUSTABLE TAPERED WORM FOR ELIMINATING BACKLASH

Filed Feb. 21, 1957 2 Sheets-Sheet 1

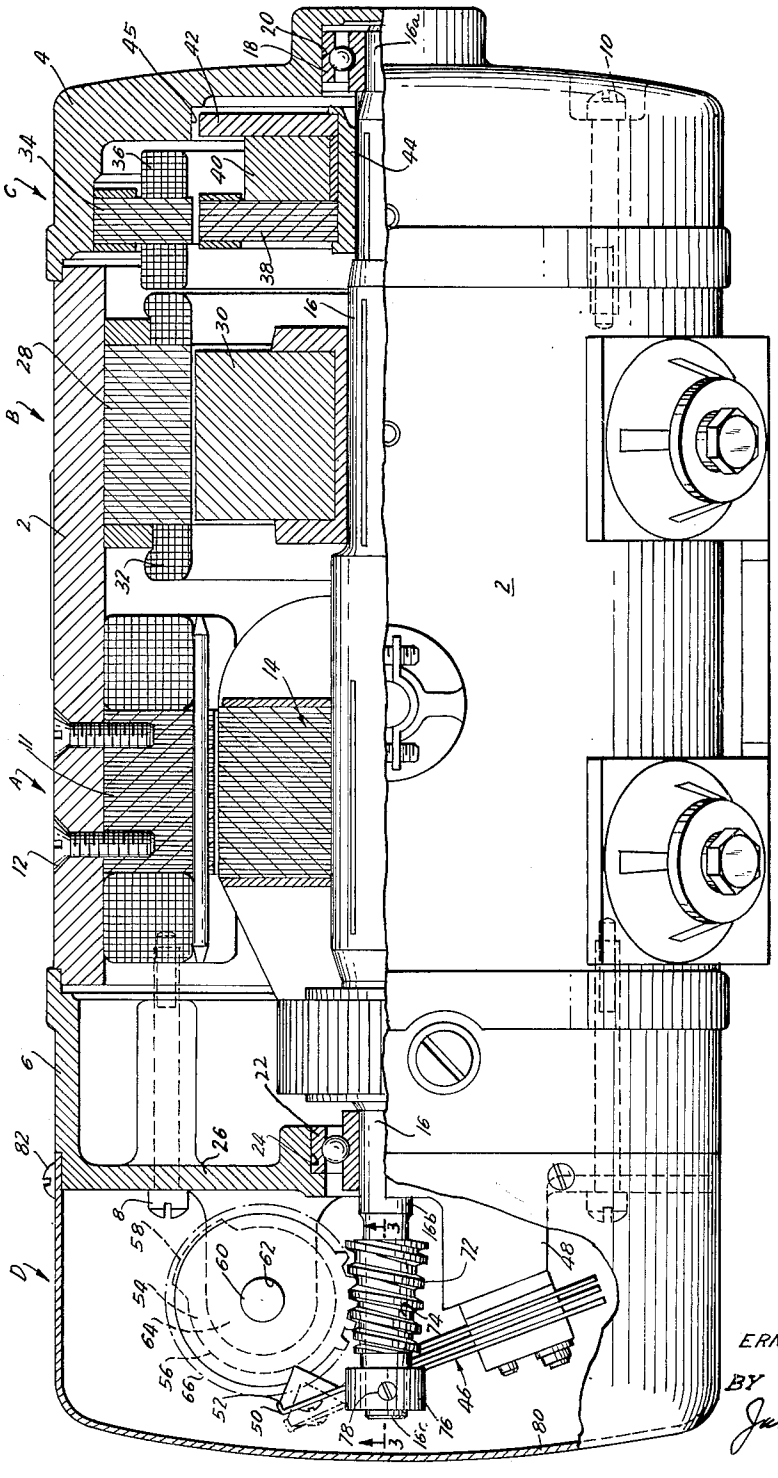

FIG. 1

INVENTOR.
ERNEST W. JOHNSON
BY
James and Franklin
ATTORNEY

May 2, 1961 E. W. JOHNSON 2,982,825

RINGING MACHINE WITH ADJUSTABLE TAPERED WORM FOR ELIMINATING BACKLASH

Filed Feb. 21, 1957 2 Sheets-Sheet 2

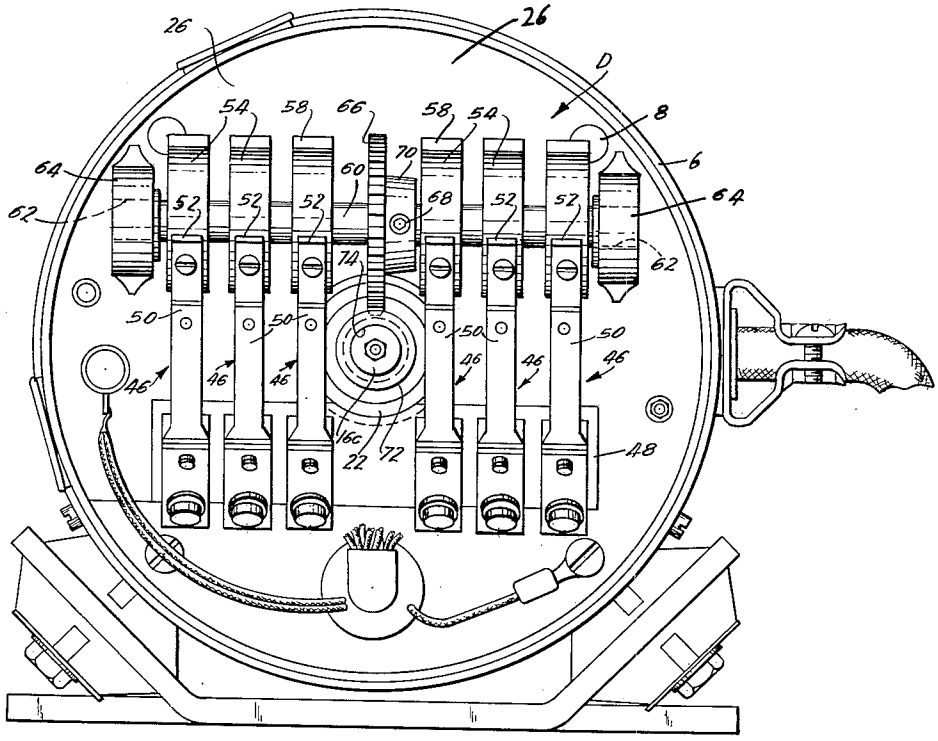

FIG. 2

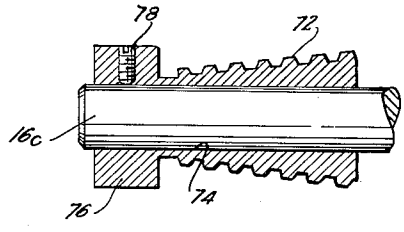

FIG. 3

INVENTOR.
ERNEST W. JOHNSON

BY James and Franklin

ATTORNEY

United States Patent Office 2,982,825
Patented May 2, 1961

2,982,825

RINGING MACHINE WITH ADJUSTABLE TAPERED WORM FOR ELIMINATING BACKLASH

Ernest W. Johnson, Randolph, Mass., assignor to National Pneumatic Co., Inc., Boston, Mass., a corporation of Delaware

Filed Feb. 21, 1957, Ser. No. 641,628

2 Claims. (Cl. 200—33)

The present invention relates to a ringing machine of the type used in telephone applications to produce timed signals for ringing, indicating a busy line, and the like.

Such machines generally comprise a motor which drives generators or alternators from which ringing signals are derived, and which also drives a timing assembly operatively associated with the outputs of the generators or alternators in order to control and time the application of those signals to the telephone lines or the like to which those signals may be connected. The timing mechanism usually comprises a plurality of switches the opening and closing of which is controlled by cams driven in rotation by the motor.

It is to the driving connection between the motor and the timing assembly that this invention is specifically directed. It is important, from the point of view both of accuracy and reliability of operation of the timing assembly that the driving connection thereto from the motor have as little backlash as is feasible.

In the past this driving connection has been accomplished by fixedly mounting a worm on the motor shaft and by providing the timing assembly with a worm wheel meshing therewith. The drive shaft is journaled in the frame or casing of the overall ringing unit and extends out beyond an end thereof. The frame or casing is provided with a bracket within which the shaft of the worm wheel is rotatably mounted. Backlash as between a worm and a worm wheel is related to the spacing between the shafts of the two gears. If the shafts are spaced too far apart, while meshing may occur, the backlash will be excessive. If the shafts are spaced too close together the gears will interfere.

Thus a particularly difficult manufacturing or assembly problem is presented, particularly in view of the unavoidable inaccuracies in alignment and relative location of parts incident upon quantity production. If the shaft of the timing assembly is mispositioned by only a few thousandths of an inch an improper amount of backlash will develop.

Accordingly it has been found necessary in structures of this type to form the mounting structure for the timing assembly shaft separate from the casing of the ringing machine and to mount the former on the latter with a certain degree of permissible play in order to accommodate for variations in dimensions attendant upon manufacturing procedures. The final position of the timing assembly shaft relative to the motor drive shaft is accomplished in a "cut and try" manner through the use of shims interposed between the supporting structure for the timing shaft and the frame or casing of the ringing machine proper. This is obviously a time consuming and laborious procedure which, since it must be carried out individually for each unit, represents an appreciable cost factor. Moreover, the fact that the timing shaft mounting structure and the ringing machine casing must be formed of separate parts also adds, in and of itself, to the cost of the overall unit.

In accordance with the present invention the above disadvantages are entirely eliminated. Instead of adjusting the relative positions of the drive shaft and the timing shaft, I control the amount of backlash by fixedly locating those shafts and by utilizing a tapered worm which is slidable along its shaft and which may be secured in any desired axial position therealong. Since the worm is tapered, a change in its axial position with respect to its shaft can compensate for differences in spacing between the two shafts involved. The adjustment of the position of the worm on the shaft is much more readily accomplished than the prior art adjustment of the positions of the shafts by means of shims, and no "cut and try" operations are required. The worm may be slid along the shaft until, by direct observation or measurement, the proper relationship between worm and worm wheel is achieved, after which the worm is fixed to the shaft.

Through the use of an axially slidable tapered worm I am further able to provide for ready adjustment of backlash during the useful life of the machine. In the event that either the worm or worm wheel should wear, a simple repositioning of the worm on its shaft will suffice to restore the backlash to acceptable value, without requiring disassembly or remounting of any of the operative parts of the machine.

In addition, the use of a slidable tapered worm permits the supporting structure for the timing shaft to be formed of one piece with the frame or casing of the machine. Whatever manufacturing tolerances may be involved in the location or dimensions of the holes for supporting the timing shaft and the aperture or bearing for supporting the drive shaft, those tolerances can be compensated for by a simple axial sliding adjustment of the worm on its shaft.

Hence a structure is produced which is sturdier and at the same time less expensive than prior art structures and in which backlash adjustments may readily be made during the life of the equipment.

To the accomplishment of the above, and to such other objects as may hereinafter appear, the present invention relates to the structure of a ringing machine, and particularly to the driving connection between the drive shaft of that machine and the shaft of the timing assembly thereof, as defined in the appended claims and as described in this specification, taken together with the accompanying drawings, in which:

Fig. 1 is a side elevational view, partially broken away and cross sectioned, of a ringing machine made in accordance with the present invention;

Fig. 2 is an end elevational view of the timing assembly end of that machine with the cover removed; and

Fig. 3 is a cross sectional view taken along the line 3—3 of Fig. 1.

As here disclosed the ringing machine is formed in four sections, a driving section generally designated A, a generator section generally designated B, a tone alternator section generally designated C and a timing section generally designated D. The specific construction of the elements of each of these sections, except as hereinafter described as bearing upon the instant invention, may take a wide variety of forms, and forms no part of the present invention, although it may be pointed out that the specific structure of the tone alternator section C is believed, in and of itself, to embody certain patentable advances over the prior art with respect to which application Serial No. 641,571, of February 21, 1957, entitled "Generator Rotor With Axially Oriented Permanent Magnet" in the name of Henry Packard, and assigned to the assignee of this application, relates.

In the form here specifically disclosed the ringing machine comprises a casing ring 2 to which end caps 4 and 6 are secured in any appropriate manner, as by means of the bolts 8 and 10 respectively. The driving motor, which may be either of D.C. or A.C. type, comprises a field structure 11 secured to the frame ring 2 by means of screws 12 and within which armature assembly 14 rotates, that assembly including an armature shaft 16 which extends in both directions therefrom. One end 16*a* of the shaft 16 is journaled in bearing 18 mounted within recess 20 in the end cap 4 and the other end 16*b* of the shaft 16 extends through bearing 22 mounted within aperture 24 in the end cap 6 and extends out beyond the end wall 26 of the end cap 6.

Secured to the casing ring 2 in any appropriate manner is the stator 28 of a generator B, a permanent magnet 30 being mounted on the shaft 16 so as to rotate therewith and generate a signal in the coils 32 on the stator 28. The tone alternator C comprises a stator field structure 34 mounted within the end cap 4 and provided with coils 36, within which a rotor field structure 38 rotates, that rotor field structure 38, together with an axially oriented permanent magnet 40 and a magnetically permeable disk 42, being mounted on bushing 44 secured to the shaft 16. The permeable member 42 rotates within recess 45 formed in the end cap 4.

The timing assembly D comprises a plurality of leaf spring switches generally designated 46 mounted in any appropriate manner on a protruding portion 48 of the end wall 26 of the end cap 6. One of the contact elements 50 of each of the switches 46 extends upwardly and is provided with a cam follower 52 adapted to engage with a corresponding cam 54 having a depressed portion 56 and a raised portion 58 so related to the cam follower 52 that when the depressed portion 56 is opposite the cam follower 52 the latter, and the contact element 50, will assume its position shown in solid lines in Fig. 1, and when the raised cam portion 58 engages the cam follower 52 it and the contact element 50 will be moved out to its broken line position shown in Fig. 1. Hence each of the switches 46 will be opened and closed in accordance with the position of the corresponding cam 54.

All of the cams 54 are secured to shaft 60 so as to rotate therewith. The ends of the shaft 60 are journaled in apertures 62 in ears 64 formed integral with the end wall 26 of the end cap 6 and extending out therefrom above and to either side of the shaft portion 16*b*. A gear or worm wheel 66 is secured to the shaft 60, as by means of set screw 68 passing through the hub 70 thereof, the gear 66 being located directly above the shaft portion 16*b* and extending down theretoward.

The outer end 16*c* of the shaft portion 16*b* is of reduced diameter, and the worm 72 is received thereover. This worm is axially apertured at 74 so as to be fairly snugly received on the shaft portion 16*c* but slidable thereover. It is provided with a hub 76 through which a set screw 78 is threaded, the tightening of the set screw serving to lock the worm 72 to the shaft portion 16*c* so that the two will rotate together and so that their relative axial position is fixed.

The worm 72 is tapered axially thereof, that taper being here shown as toward the hub 76. In the drawings the degree of taper is greatly exaggerated for purposes of illustration, it being quite apparent from Fig. 1 that the diameter of the left hand end of the worm 72 is less than the diameter of the right hand end thereof. The actual degree of taper required will depend upon the manufacturing tolerances expected in the construction of the casing or frame.

A dust cover 80 may surround the timing section D and may be secured to the end cap 6 in any appropriate manner as by means of the screws 82.

It will be noted that as here specifically disclosed the ears 64 which support the timing shaft 60 are formed of one piece with the end cap 6, as by a single die casting operation. The apertures 24 and 62 may be machined to ordinary manufacturing tolerances, and by any appropriate machine tool. Because of these tolerances the vertical spacing between the shaft 60 and the shaft portion 16*c* will differ somewhat from unit to unit. However, such individual differences in spacing may be compensated for by varying the position of the worm 72 axially along the shaft portion 16*c*. If the shafts 60 and 16*c* are spaced comparatively far apart the worm 72, with its taper as shown, will be slid to the left as viewed in Fig. 1 until the amount of backlash has been reduced to desired value. If the shafts 60 and 16*c* are closer together than usual, the worm 72 of Fig. 1 may be slid to the right until the backlash characteristics of the worm-worm wheel interengagement are satisfactory. The proper position of the worm 72 in any given unit may be determined from direct observation, possibly aided by suitable feelers or gauges. Once the worm 72 has been appropriately axially positioned on the shaft portion 16*c* the set screw 78 is tightened and the unit is ready for operation.

It will further be appreciated that if either the worm 72 or the worm wheel 66 should wear as a consequence of use of the machine, backlash will increase. To eliminate this excessive backlash it is merely necessary to readjust the axial position of the worm 72 on the shaft portion 16*c*.

It will be clear to those familiar with the manufacturing and assembly techniques that it is considerably less expensive to form the end cap 6 and the mounting ears 64 in one piece instead of in two or more pieces, that eliminating the necessity for assembly of the separate pieces characteristic of prior art constructions represents a substantial reduction in cost, and that eliminating the time consuming shim adjustments of the prior art constructions represents a most appreciable saving in cost.

While but a single embodiment of the present invention has been here disclosed, it will be apparent that many changes may be made in the specific details thereof without departing from the spirit of the invention as defined in the following claims.

I claim:

1. A ringing machine comprising a frame, a motor on said frame having a drive shaft, said frame comprising an end cap closing an end of said casing, covering an end of said motor, and having an aperture with a bearing mounted therein, said drive shaft being journaled in said bearing and extending therethrough beyond said end cap, a bracket on said end cap and extending therebeyond in the same direction as said drive shaft but spaced therefrom, said bracket carrying a means for timing a ringing signal comprising a second shaft displaced from the axis of said drive shaft and a gear on said second shaft extending toward said drive shaft, and a worm on the extending portion of said drive shaft and meshing with said gear, said worm being rotatable with said drive shaft adjustably axially positionable relative thereto, and having its thread tapered axially of said drive shaft.

2. A ringing machine comprising a frame, a motor on said frame having a drive shaft, said frame comprising an end cap closing an end of said frame, covering an end of said motor, and having an aperture with a bearing mounted therein, said drive shaft being journaled in said bearing and extending therethrough beyond said end cap, a bracket on and of one piece with said end cap and extending therebeyond in the same direction as said drive shaft but spaced therefrom, said bracket carrying a means for timing a ringing signal comprising a second shaft displaced from the axis of said drive shaft and a gear on said second shaft extending toward said drive shaft, and a worm on the extending portion of said drive shaft and meshing with said gear, said worm being rotatable with said drive shaft adjustably axially position-

able relative thereto, and having its thread tapered axially of said drive shaft.

References Cited in the file of this patent

UNITED STATES PATENTS

260,892	Overton et al.	July 11, 1882
324,075	Bradley	Aug. 11, 1885
969,214	Spellman et al.	Sept. 6, 1910
1,993,957	Coberly	Mar. 12, 1935
2,401,153	Hall et al.	May 28, 1946
2,602,865	Mauren	July 8, 1952
2,725,433	Reid et al.	Nov. 29, 1955