J. A. GRAY.

CAN END SORTING APPARATUS.

APPLICATION FILED NOV. 11, 1915.

1,308,063.

Patented July 1, 1919.

Fig. 1.

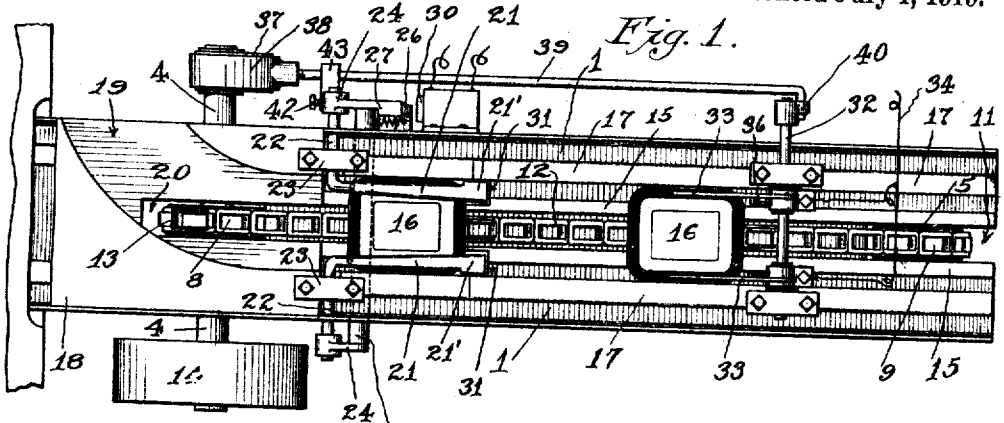

Fig. 2.

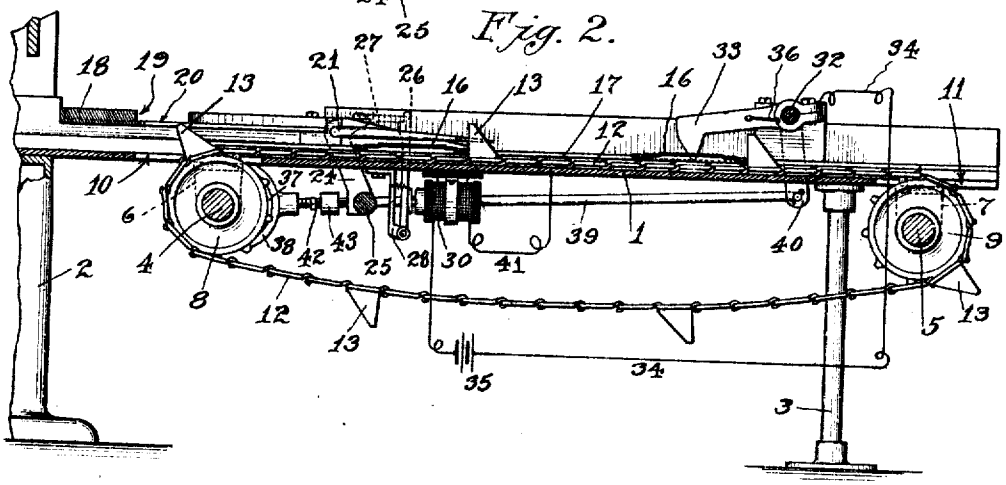

Fig. 3.

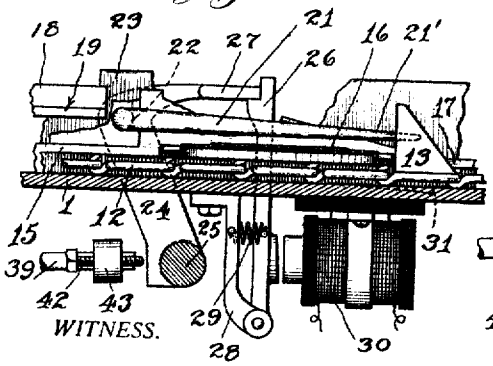

Fig. 4.

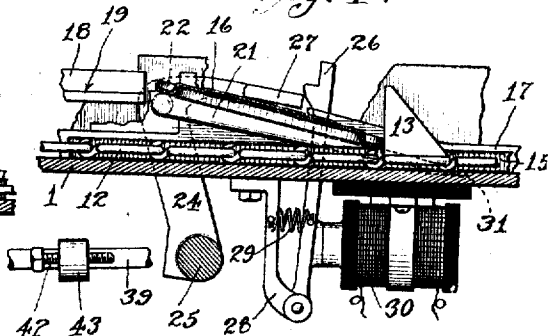

WITNESS.

S. D. Thornburgh.

INVENTOR.

BY James A. Gray

R. A. Acker

Its ATTORNEY.

THE COLUMBIA PLANOGRAPH CO., WASHINGTON, D. C.

UNITED STATES PATENT OFFICE.

JAMES A. GRAY, OF SAN FRANCISCO, CALIFORNIA, ASSIGNOR TO AMERICAN CAN COMPANY, OF SAN FRANCISCO, CALIFORNIA, A CORPORATION OF NEW JERSEY.

CAN-END-SORTING APPARATUS.

1,308,063. Specification of Letters Patent. Patented July 1, 1919.

Application filed November 11, 1915. Serial No. 60,968.

To all whom it may concern:

Be it known that I, JAMES A. GRAY, a citizen of the United States, residing at the city and county of San Francisco and State of California, have invented certain new and useful Improvements in Can-End-Sorting Apparatus, of which the following is a specification.

The present invention relates to an apparatus for sorting can ends and distributing the same according to whether or not ring liners have previously been applied thereto.

In the canning of food products and other materials in the so-called sanitary cans, it sometimes happens that for one reason or another, a can end is applied to a can without a ring liner being interposed therebetween, which results in an imperfect seam and a leaky can. It is necessary, therefore, to inspect each end, to insure the presence of a ring liner in the flange thereof, before the same is applied to a can; and since the process of applying ends to cans is carried on very rapidly, this inspection, if sufficiently rigid to insure accuracy, necessarily involves considerable expense.

The object of the present invention, therefore, is to provide an apparatus, automatic or otherwise capable of distinguishing between lined and non-lined can ends, and sorting out the latter so that they will not be carried along with the properly lined ends and applied to cans. It may be applied to any convenient point between the process of lining the ends, and that of applying said ends to cans, irrespective of whether these operations are carried on consecutively or not, and may or may not be incorporated in the machines for performing these operations, as convenience or practicability may direct.

In order to comprehend the invention, reference should be had to the accompanying drawings, in which—

Figure 1 is a plan view of the sorting apparatus, showing lined can ends being conveyed therethrough.

Fig. 2 is a longitudinal sectional elevation of the same.

Fig. 3 is a sectional elevation of the mechanism for removing the non-lined ends from the conveyer, showing a lined end passing therethrough.

Fig. 4 is a view similar to Fig. 3, showing a non-lined end being removed from the conveyer.

In the drawings, the numeral 1 represents a suitably constructed bed or table, supported in any convenient manner, as by posts 2 and 3. Arranged transversely beneath this table, one near each end thereof, are two parallel horizontal shafts 4 and 5, journaled in suitable depending brackets 6 and 7, and having fixed thereon the sprocket wheels 8 and 9 respectively. Said sprockets project upwardly through centrally disposed slots 10 and 11 in the table 1, and carry an endless conveyer chain 12, provided with spaced outwardly extending lugs 13, the upper run of said chain traveling above the table 1. Power for driving the conveyer chain is applied to a belt pulley 14 carried by and fixed upon the shaft 4.

Tracks or runways 15 are mounted upon the table 1 parallel to and on either side of the conveyer chain 12, upon which can ends 16 are adapted to slide. Suitable guide rails 17 are provided on either side of the tracks 15, to hold the can ends 16 upon said tracks 15 while said ends are being moved along the table by the engagement therewith of the lugs 13 on the conveyer chain 12.

Superimposed a small distance above the table 1, at the discharge end thereof, is a plate 18, carrying a runway 19 for the discharge of unlined can ends, and formed with a slot 20 through which the lugs 13 of the conveyer chain 12 may project. Immediately forward of this plate 18 are mounted a pair of vertically swinging selector arms 21, above and parallel to the can tracks 15. Said selector arms 21 are carried by short transverse rock-shafts 22, mounted in suitable bearing supports 23, and carrying at their outer ends the levers 24, said levers being connected together, beneath the table 1, by a counter-weight bar 25.

The selector arms 21 are normally held in a raised, or horizontal position, as shown in Figs. 2 and 3 of the drawings, by means of

a latch 26, which engages a lever 27 carried by one of the rock-shafts 22. In this position of the selector arms 21, the can ends 16, being moved along the tracks 15 by the conveyer chain 12, pass under said arms 21 and under the upper plate 18, and so out of the sphere of the machine to whatever disposition may be provided for them.

The latch 26 is pivotally supported by a bracket 28, and is normally held in position to engage the lever 27 by a spring 29. An electro-magnet 30 is mounted upon the under side of the table 1 in such a position that when said magnet is energized, it attracts the latch 26 and draws the same out of engagement with the lever 27, as shown in Fig. 4 of the drawings. This allows the selector arms 21 to drop so that their free ends 21' rest in recesses 31 in the can tracks 15, Fig. 1 of the drawings. When said arms are in this position, as shown in Fig. 4 of the drawings, a can end 16, advanced along the tracks 15 by the conveyer chain 12, is carried up over the selector arms 21 and into the runway 19 of the plate 18, whence it is removed to any suitable place of deposit.

Mounted above the table 1 forward of the selector arms 21 is a transverse rock-shaft 32, Figs. 1 and 2 of the drawings, carrying a pair of contact fingers 33, insulated from the frame of the machine, and connected by means of a wire 34 to a suitable source of electric energy indicated at 35, Fig. 2 of the drawings. The contact fingers 33 are not mounted rigidly upon the rock-shaft 32, but are moved therewith by flexible spring connections 36. Said contact fingers 33 are so positioned, that when the shaft 32 is rocked by means of an eccentric 37 upon the drive shaft 4, the eccentric strap 38 being connected by a rod 39 to a lever 40 on said rock-shaft 32, said contact fingers 33 are lowered into contact with the flange of each can end 16 passing therebeneath. Said can ends, being metal, are in electrical contact with the frame of the machine, said frame being connected through the electro-magnet 30, by a wire 41 to the other side of the source of electrical energy 35.

As each succeeding can end passes beneath the contact fingers 33, said fingers are depressed onto the flange thereof. If the can end be properly lined, no electrical contact will be made between said end and the fingers 33, because the fibrous liners are made of electrically non-conducting material; the magnet 30 is therefore not energized, the selector arms 21 remain held up by the latch 26, and the lined can end 16 passes out of the machine on the tracks 15, as in Figs. 1, 2 and 3 of the drawings. If, however, an unlined can end be brought under the contact-fingers 33, upon the downward movement of said fingers, the electric circuit is closed through the wire 34, the fingers 33, the unlined can end 16, the frame of the machine, the wires 41 and the magnet 30; said magnet attracts the latch 26; the selector arms 21 are allowed to fall, and the unlined can end rides up over said selector arms onto the plate 18, and is guided by the runway 19 to a suitable place of deposit separate from that provided for the lined can ends.

The selector arms 21 are reset to their horizontal position, immediately after the passage of a can end thereover, by the engagement of an adjustable screw 42 in a projecting lug 43, carried by the eccentric rod 39, with one of the levers 24. Thus at every forward movement of said rod 39, which occurs once for every can end passing through the machine, the selector arms 21 are raised to horizontal position, and remain so until an unlined can end passes under the contact fingers 33.

I have herein described my invention in the form which is deemed preferable. I am aware, however, that changes may be made in the form and construction of the detailed working parts of the device without in any way affecting the principles of the invention, and I therefore do not wish to be construed as limiting myself in this regard, but on the contrary, wish to claim the invention as broadly as the state of the art will permit.

Having thus described my invention, what I claim as new and desire to protect by Letters Patent is:—

1. In a can end sorting apparatus, in combination: carrying means for successively transporting can ends to a normal place of deposit; a movable device for separating certain of said can ends from said carrying means to be removed to a separate place of deposit; means for actuating said movable device; and means comprising a movable finger and mechanism for moving it toward and from the surfaces of the can ends whereby certain can ends cause the automatic separating action of said actuating means.

2. In a can end sorting apparatus, in combination: carrying means for successively transporting can ends to a normal place of deposit; a movable device for lifting certain of said can ends from said carrying means to be removed to a separate place of deposit; electrical means for actuating said movable device; and means comprising an electric circuit adapted to temporarily include the metal of a can end whereby certain can ends automatically cause the operation of said electrical means.

3. In a can end sorting apparatus, in combination; a track on which can ends engage and are adapted to be successively moved to a normal place of deposit; means for causing such can ends to be carried along said track;

movable arms mounted above said track and adapted to be engaged below certain of the can ends to remove them to another place of deposit; means for actuating said arms; and means whereby certain can ends automatically cause the operation of said actuating means.

4. In a can end sorting apparatus, in combination: a track on which can ends engage and are adapted to be successively moved to a normal place of deposit; means for causing such can ends to be carried along said track; movable arms mounted above said track and adapted to be engaged below certain of the can ends to remove them to another place of deposit; electrical means for actuating said arms; and means whereby the can ends to be so engaged cause the automatic operation of said electrical means.

5. In a can end sorting apparatus, in combination: means for successively carrying and depositing the can ends to be sorted; normally inoperative means for removing certain can ends from said carrying means; a contact device adapted to enter within all of the can ends to engage the liner therein; means whereby said contact device renders operative the said removing means in the absence of the said liner; and means for actuating the said contact device.

6. A can end sorting apparatus comprising a conveyer having a track for the passage thereover of can ends to be sorted, a pair of swinging selector arms for lifting unlined can ends from said track, devices normally holding said arms in inoperative position, electrically controlled means for releasing said arms to allow the same to fall into operative position, and devices whereby a can end which has no liner may be caused to operate said electrically controlled means.

7. A can end sorting apparatus comprising a conveyer having a track for the passage thereover of can ends to be sorted, a pair of swinging selector arms for removing unlined can ends from said track, devices normally holding said arms in inoperative position, electrically controlled means for releasing said arms to allow the same to fall into operative position, means including a contact device adapted to enter within all of the can ends for raising said arms to inoperative position, and devices operated by a can end which has no liner for causing the operation of said electrically controlled means.

8. A can end sorting apparatus comprising a conveyer having a track for the passage thereover of lined can ends to a place of deposit, a superposed track for conveying unlined can ends to a separate place of deposit, and electrically controlled means for delivering can ends to either track in accordance with whether said ends are lined or unlined.

9. A can end sorting apparatus comprising a conveyer having a track for the passage thereover of lined can ends to a place of deposit, a superposed track for conveying unlined can ends to a separate place of deposit, a pair of swinging selector arms for transferring unlined can ends from said first track to said second track, electrically operated devices for controlling the movements of said selector arms, and means whereby unlined can ends cause the operation of said devices.

10. A can end sorting apparatus comprising a conveyer having a track for the passage thereover of can ends to a place of deposit, a superposed track for conveying unlined can ends to a separate place of deposit, a pair of swinging selector arms for transferring unlined can ends from said first track to said second track, means operated by the conveyer mechanism for raising said arms to inoperative position, and electrically operated devices the circuit of which is affected by unlined can ends for releasing said arms to allow the same to fall into operative position.

11. A can end sorting apparatus comprising a conveyer having a track for the passage thereover of lined can ends to a place of deposit, a superposed track for conveying unlined can ends to a separate place of deposit, a pair of swinging selector arms for transferring unlined can ends from said first mentioned track to said second track, means operated by the conveyer mechanism for raising said arms to inoperative position, an electro-magnet for releasing said arms to allow the same to fall into operative position, and means for energizing said magnet comprising a source of electric energy, a contact finger for establishing electrical contact with unlined can ends, means for actuating said contact finger and electrical conductors for completing the circuit.

12. A can end sorting apparatus comprising a conveyer having a track for the passage thereover of lined can ends to a place of deposit, a superposed track for conveying unlined can ends to a separate place of deposit, a pair of swinging selector arms for transferring unlined can ends from said first mentioned track to said second track, means operated by the conveyer mechanism for raising said arms to inoperative position, and an electro-magnet for releasing said arms to allow the same to fall into operative position, and means for energizing said magnet, the energizing of said magnet depending upon the absence of liners in the can ends.

13. A can end sorting apparatus comprising a track for the passage thereover of lined can ends to a place of deposit, a superposed

track for carrying unlined can ends to a separate place of deposit, a selector mechanism for transferring unlined can ends from said first mentioned track to said second track, means for operating the selector mechanism, the operation of said selector mechanism depending upon the presence or absence of liners in the can ends, and means for moving said can ends along said tracks.

14. In a can end sorting apparatus, in combination: carrying means for successively transporting can ends to a normal place of deposit; a movable device for lifting certain of said can ends from said carrying means to be removed to a separate place of deposit; and a contact device adapted to enter within all of the can ends and having means for actuating said movable device.

15. In a can end sorting apparatus, in combination: carrying means for successively transporting can ends to a normal place of deposit; a movable device for lifting certain of said can ends from said carrying means to be removed to a separate place of deposit; and a contact device adapted to enter within all of the can ends and having electrical means for actuating said movable device.

16. In a can end sorting apparatus, in combination: a track on which can ends are adapted to be successively moved to a normal place of deposit; means for causing such can ends to be carried along said track; movable arms mounted above said track and adapted to be engaged below certain of the can ends to remove them to another place of deposit; and a contact device adapted to enter within all of the can ends and having means for actuating said arms.

17. In a can end sorting apparatus, in combination: a track on which can ends are adapted to be successively moved to a normal place of deposit; means for causing such can ends to be carried along said track; movable arms mounted above said track and adapted to be engaged below certain of the can ends to remove them to another place of deposit; and a contact device adapted to enter within all of the can ends and having electrical means for actuating said arms.

18. In a can end selecting machine, in combination: a can end carrier having means for removably holding can ends thereon; normally inoperative means for removing can ends from said carrier; means for making contact with the lined portion of each can end; and devices whereby such contact with an unlined can end causes said can end removing means to be operative.

19. In a can end selecting machine, in combination: an endless belt carrier having means for holding can ends thereon at regular intervals; a pivoted contact device to engage within each can end; an electric circuit which is completed by said contact device and an unlined can end; a magnet which is energized by said circuit; and can end removing means which are actuated by said magnet.

20. An apparatus for separating unlined from lined can ends, the same comprising carrier means for the ends to be sorted, mechanism associated therewith for controlling the discharge of the ends in accordance with whether they are lined or unlined, a contact device adapted to enter within each can end and engage either the liner thereof or the metal thereof, and means whereby such metal contact causes the action of said controlling mechanism and the discharge of unlined can ends.

21. An apparatus for the described purpose having, in combination: a carrier for the can ends to be sorted, electrically controlled means associated therewith for varying the discharge of the ends in accordance with whether they are lined or unlined, a contact device adapted to enter within each can end and engage either the liner thereof or the metal thereof, and means whereby such metal contact causes the action of said electrically controlled means and the discharge of unlined can ends.

22. In a can end sorting apparatus, in combination: a track for the passage thereover of can ends, an endless belt conveyer having means for engaging can ends in fixed successive relation and propelling the same on said track; a contact device adapted to enter within each can end and engage the liner thereof or the metal thereof; a superposed can end collecting means for such ends which are unlined; normally inoperative means for removing unlined can ends from the track to said collecting means; electrical means for normally maintaining said can end removing means in inoperative position, said electrical means being controlled by the action of the contact device to cause the release of said can end removing means; and a device whereby the carrier belt mechanism restores the can end removing means to inoperative position.

23. In a can end sorting apparatus, in combination: can end carrying mechanism; means for removing can ends therefrom adapted to have an operative position and an inoperative position; means connected with the carrier mechanism for causing said removing means to move from operative to inoperative position; and means controlled by the can ends to be removed whereby said removing means may be caused to move to operative position.

24. In a can end sorting apparatus, in combination; can end carrying mechanism; means for removing can ends therefrom adapted to have an operative position and

and inoperative position; means connected with the carrier mechanism for causing said removing means to move from operative to inoperative position; and means comprising a contact device adapted to enter within each can end whereby said removing means may be caused to move to operative position.

In testimony whereof I have signed my name to this specification in the presence of two subscribing witnesses.

JAMES A. GRAY.

Witnesses:
W. D. FOSTER,
D. F. MENNIS.

Copies of this patent may be obtained for five cents each, by addressing the "Commissioner of Patents, Washington, D. C."