(No Model.)

J. F. WILKINSON.

BICYCLE CRANK PEDAL.

No. 590,557. Patented Sept. 21, 1897.

FIG. 1.

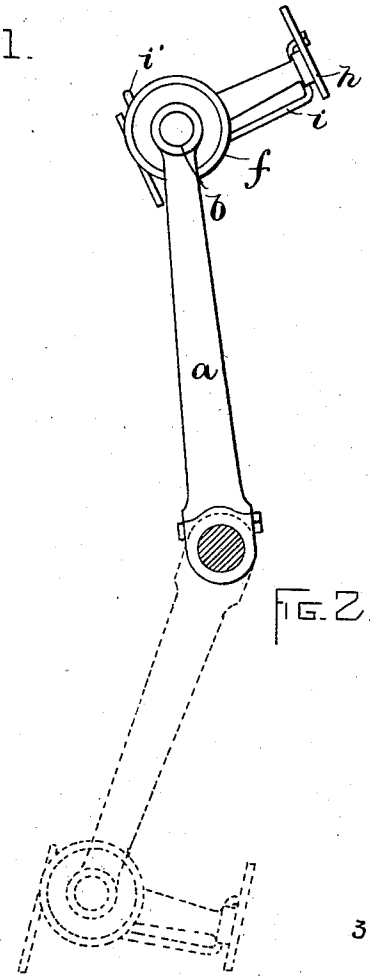

FIG. 3.

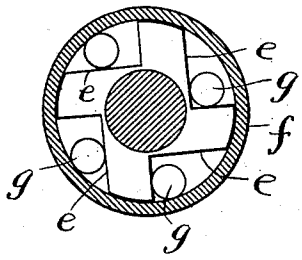

FIG. 2.

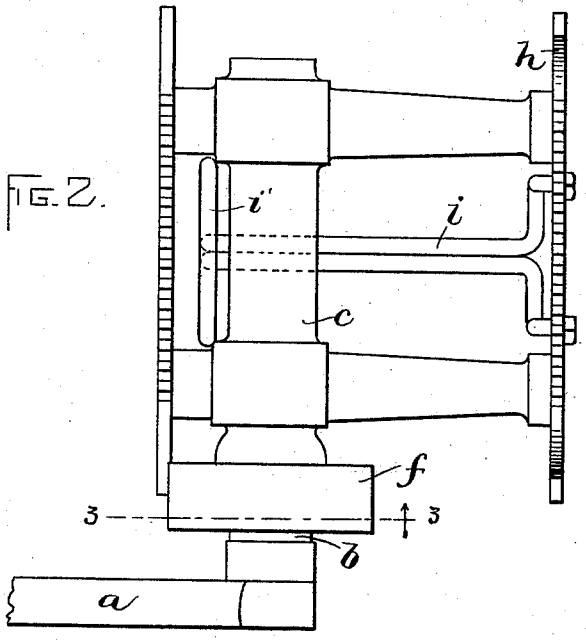

FIG. 5.

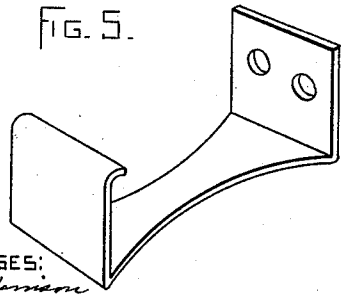

FIG. 4.

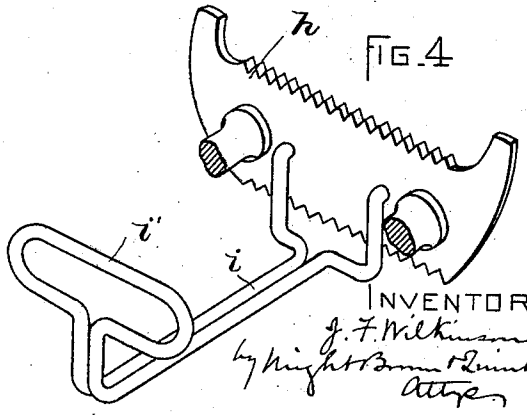

WITNESSES:
A. D. Harrison
P. W. Pezzetti

INVENTOR:
J. F. Wilkinson
by Wright Brown & Quinby
Attys.

THE NORRIS PETERS CO., PHOTO-LITHO., WASHINGTON, D. C.

UNITED STATES PATENT OFFICE.

JOHN F. WILKINSON, OF PEPPERELL, MASSACHUSETTS, ASSIGNOR, BY DIRECT AND MESNE ASSIGNMENTS, OF FIVE-EIGHTHS TO RUTH BROWN, OF NEW IPSWICH, NEW HAMPSHIRE, AND R. G. DAVIS, OF BOSTON, MASSACHUSETTS.

BICYCLE-CRANK PEDAL.

SPECIFICATION forming part of Letters Patent No. 590,557, dated September 21, 1897.

Application filed June 1, 1896. Serial No. 593,710. (No model.)

To all whom it may concern:

Be it known that I, JOHN F. WILKINSON, of Pepperell, in the county of Middlesex and State of Massachusetts, have invented certain new and useful Improvements in Bicycle-Crank Pedals, of which the following is a specification.

The object of this invention is to provide a bicycle-crank with a pedal or foot-piece which during the downward or effective stroke will have the time of its effective operation increased, said pedal being provided with means which will automatically elevate its front portion to avoid excessive motion of the rider's ankle.

To these ends the invention consists in the construction and combination of parts, substantially as hereinafter described and claimed.

In the drawings which accompany and form part of this specification, Figure 1 represents an elevation of a bicycle-crank having its wrist-pin provided with a pedal or foot-piece of my improved construction, the position of the parts being that which they will occupy when the downstroke is to be commenced, and the dotted-line position indicating the lowest portion of the downstroke. Fig. 2 represents a plan view of the pedal and a portion of the crank-arm. Fig. 3 represents a detail section on the line 3 3 of Fig. 2. Fig. 4 represents a perspective view of one form of attachment to the pedal, hereinafter described. Fig. 5 represents a similar view of another form of attachment.

In the drawings, *a* represents the crank-arm, having a wrist-pin *b*, which is fitted to the sleeve *c* of the foot-piece or pedal. The wrist-pin extends through the pedal near one end thereof, instead of at the middle, as is customary, this resulting in a tendency of the forward end of the pedal when at the commencement of the downstroke to descend or rotate on the wrist-pin. This tendency is prevented, however, by a clutch mechanism consisting of the cam-surfaces *e* on the wrist-pin, between which and the inner periphery of a cup *f*, carried by the sleeve *c*, are fitted the balls or cylindrical rollers *g*. This particular form of clutch is not a part of my invention, and I may substitute therefor any other preferred form of clutch.

Attached to the front plate *h* of the pedal is an arm *i*, which extends backward under the sleeve *c* and then up to a position above the upper edge of the rear plate of the pedal, said arm presenting at this point a tread-surface *i'*, that is elevated above the rear end of the pedal. This arm may consist of a piece of steel wire bent to the form as indicated in Fig. 4 and having its ends passed through holes in the plate *h* and secured thereto by suitable nuts, or it may consist of a piece of sheet metal bent substantially as shown in Fig. 5 and suitably bolted to the front plate *h* of the pedal.

In using when the crank is moved to an upright position and its wrist-pin is in the position of what would originally be the dead-center the front plate *h* is in advance of this point, and pressure thereon immediately imparts an effective force tending to rotate the crank, this being due to the clutch mechanism above described, which would prevent any rearward oscillation of the pedal on the wrist-pin. At the moment when the rider would begin to exert downward pressure it is first imparted to the tread-surface *i'*, which immediately throws upward the front plate *h* of the pedal to a position where the foot can accommodate itself at once to the proper position to acquire the necessary force. Without this arm *i* the foot in order to exert pressure upon the front plate *h* would have to be bent at an angle sufficiently to carry the ball of the foot over upon said front plate.

When the crank is in its lower position, as indicated by the dotted lines in Fig. 1, the front plate of the pedal, being in advance of the wrist-pin and held against downward rotation thereon, permits an effective pressure being exerted until said front plate is in a vertical line beneath the axis rotation of the crank. In this position the arm *i* performs the same function as above stated in that it tends to keep the front plate elevated or to elevate it in case pressure of the foot has been momentarily relieved.

Having thus explained the nature of my invention and described a way of constructing and using the same, though without attempting to set forth all of the forms in which it may be made or all of the modes of its use, what I claim, and desire to secure by Letters Patent, is—

A crank-pedal, comprising in its construction a crank-arm and wrist-pin, a pedal, and a clutch to prevent the pedal from rotating in one direction about the wrist-pin, and an elastic arm attached to the front portion of the pedal, and extending to the rear of the wrist-pin, and above the plane of the rear portion of the pedal, the said wrist-pin extending through the pedal near the rear thereof, and the clutch being adapted to grip at any point of rotation.

In testimony whereof I have signed my name to this specification, in the presence of two subscribing witnesses, this 23d day of May, A. D. 1896.

JOHN F. WILKINSON.

Witnesses:
C. F. BROWN,
A. D. HARRISON.