L. S. FLATAU.

CUP DISPENSER.

APPLICATION FILED JUNE 30, 1913.

1,091,921. Patented Mar. 31, 1914.

Fig. I.

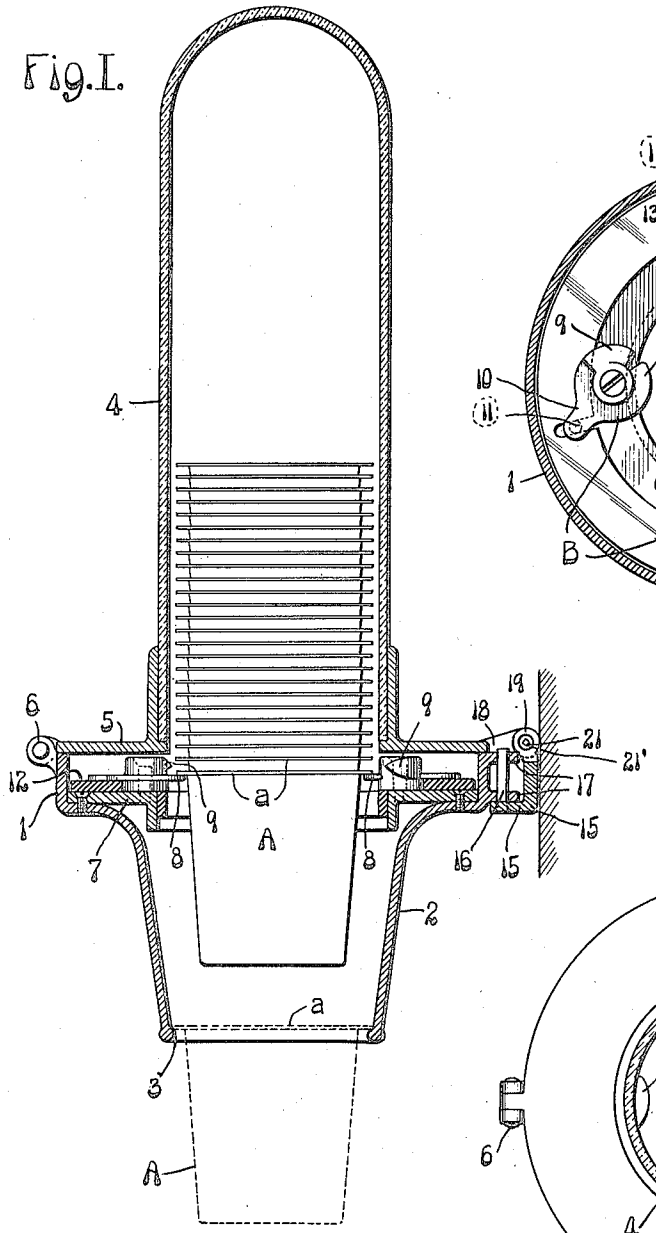


Fig. II.

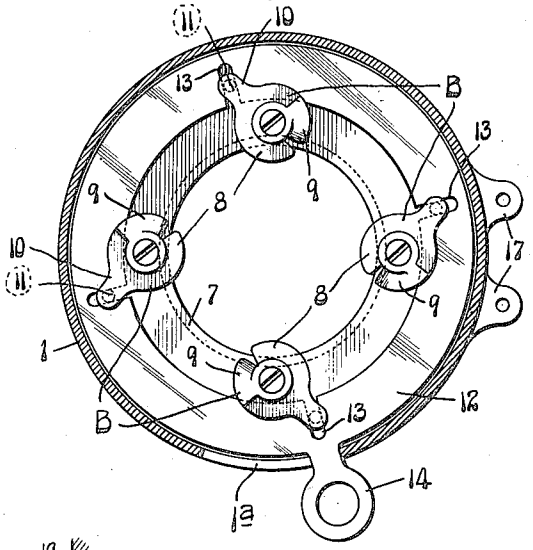


Fig. III.

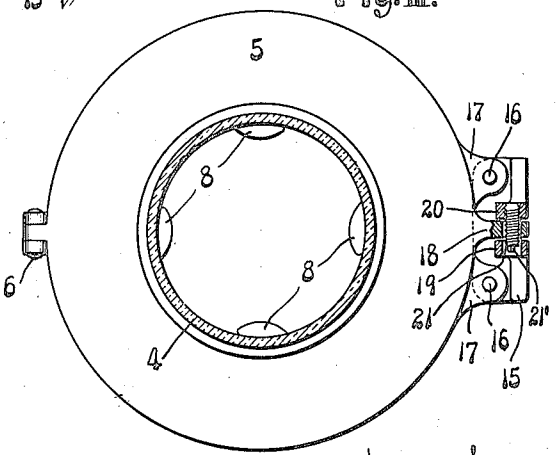


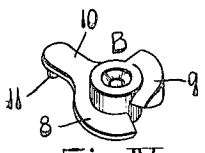


Fig. IV.

Attest

A. J. McCauley

E. B. Lines

Inventor:

L. S. Flatau

by Knight & Cook

Att'ys.

# UNITED STATES PATENT OFFICE.

LOUIS S. FLATAU, OF ST. LOUIS, MISSOURI.

## CUP-DISPENSER.

1,091,921. Specification of Letters Patent. Patented Mar. 31, 1914.

Application filed June 30, 1913. Serial No. 776,693.

*To all whom it may concern:*

Be it known that I, LOUIS S. FLATAU, a citizen of the United States of America, and resident of the city of St. Louis and State of Missouri, have invented certain new and useful Improvements in Cup-Dispensers, of which the following is a full, clear, and exact description, reference being had to the accompanying drawings, forming a part of this specification.

My invention relates to a dispenser adapted to hold paper drinking cups and to deliver them singly from the dispenser, the invention having for its object to provide means whereby the cups, nested into each other in frictional contact, may be effectually separated to permit the discharge of the cups one at a time with the remainder of the cups retained in the dispenser.

Figure I is a vertical section through my cup dispenser. Fig. II is a top or plan view of the cup separators of my dispenser and the separator operating ring, the housing being shown in horizontal section. Fig. III is a top or plan view of the dispenser, the magazine and the locking device for holding the magazine in closed position being shown in horizontal section. Fig. IV is a perspective view of one of the cup separators.

My cup dispenser is designed more particularly for use in dispensing paper drinking cups, such as those shown in the drawings, these cups being formed with outwardly extending lips at their mouths, the cups being designated A, and their lips *a*. Cups of this kind are nested together previous to their introduction into the magazine of my dispenser and, being so nested, are frictionally engaged and it is necessary to provide suitable means for forcing them apart so that they will be discharged singly from the dispenser.

1 designates the housing of my dispenser, formed with a downwardly extending spout 2, which receives each cup as it is separated from the remainder of the nested cups. The spout is preferably provided at its lower end with an internal bead 3, which receives the lips of the cups in order that they may hang suspended from the spout when they fall therethrough.

4 designates the magazine of my dispenser, having a base 5 that serves also as a cover for the housing 1. To permit access to the magazine 4, its base 5 is hinged at 6 to the housing 1.

Within the housing 1 is an annular shelf 7, through which the cups A may descend.

B designates cup separators rotatable on vertical posts secured to the shelf 7. These separators serve both to support the nested cups A, and to separate the lowermost cup from those above it, to permit its discharge from the dispenser. To provide for the separators B having the dual function mentioned, each separator includes a lower cup supporting wing 8 in the form of a segmental flange, on which the lip of the lowermost cup in the dispenser rests, and a V-shaped spreader 9, the point of which is located in a plane above the top of the wing 8, the bottom face of said spreader being located in a plane below the top of the wing 8. Each spreader 9 is adapted to enter between the lip of the lowermost cup and the lip of the cup next thereabove in the set of nested cups to be dispensed. The spreader 9 of each separator in the form of a segment offset from said segmental supporting wing, so that when the spreaders are operated between the lips of two adjoining cups, the cup supporting wings will be removed from beneath the lowermost cup. It will be readily understood that when the points of the V-shaped spreaders 9 enter between the lips of the two lowermost cups, and partake of movement therebetween, after the cup supporting wings 8 have been moved from positions beneath the lip of the lowermost cup, said spreaders will exert pressure in opposite directions against the lips of the cups beneath and above it and, consequently, the cup next to the lowermost one, and those above it will be elevated, while the lowermost cup is forced downwardly and freed from the cup in which it is seated. The spreaders B are made to perform the functions ascribed to them by an operating ring 12, which is rockably mounted on the annular shelf 7 in the dispenser housing 1. This operating ring is provided with transverse slots 13, which receive studs 11 carried by lever arms 10 on the separators B. The separator operating ring is provided with a handle 14, which extends through a slot 1ª in the dispenser housing and is operable to a limited degree commensurate with the length of said slot.

It will now be understood that when the

separators B and the separator operating ring 12 are in the positions seen in Figs. I to III, inclusive, the nested cups present in the dispenser are supported by the wings 8 of the separators, due to the lip of the lowermost cup resting upon said wing. To dislodge the lowermost cup in the dispenser, it is only necessary to move the handle 14 as permitted by the slot $1^a$ in the dispenser housing, and this movement of the handle results in partial rotation of the separator operating ring and the separators. During the partial rotation of the ring, the cup supporting wings 8 of the separators B are first withdrawn from positions beneath the lip of the lowermost cup, and the V-shaped spreaders 9 of the separators enter between the lip of the lowermost cup and the lip of the cup next thereabove. Pressure is therefore exerted by the spreaders 9 in opposite directions against the two cups referred to, due to the double incline of the V-shaped spreaders, and the cups between the lips of which the spreaders operate are so effectually separated as to free the lowermost cup and allow it to fall into the position indicated in dotted lines in Fig. I. A reverse movement of the separator operating ring 12 results in the reverse movement of the separators, so that what has now become the lowermost cup is permitted to descend from the spreaders 9 onto the cup supporting wings 8, all parts being then in initial positions, ready for the next operation.

It is quite desirable to provide against the opening, by an unauthorized person, of the magazine of a dispenser such as herein described, for the purpose of extracting the set of cups therein. I have, therefore, provided my dispenser with means by which the base of the magazine, constituting also the cover for the housing of the dispenser, may be held in closed position, this holding means being inoperable except by a special implement for operating it.

15 designates a dispenser supporting bracket, provided with vertical posts 16. The housing of my dispenser is provided with perforated lugs 17, which are fitted to the posts 16 to connect the housing to the bracket 15. The base 5 of the magazine of my dispenser is provided with an arm 18, which is positioned between a pair of parallel ears 19 and 20 at the upper end of the bracket 15. The ear 19 contains an unthreaded aperture and the ear 20 is provided with a screw threaded aperture, both of these apertures being in registration with the aperture in the arm 18 when the base of the magazine of my dispenser is in closed position.

21 is a locking screw which extends through the registering apertures in the bracket ear 19 and the arm 18 carried by the base of the dispenser magazine and engages the screw thread in the bracket ear 20. This locking screw is provided with a key receiving shank 21′, to which a key may be applied to position the locking screw, as illustrated in Fig. III. When the locking screw is so positioned, its key receiving shank is within the bracket ear 19, and the screw is inaccessible for operation except by a key, or other implement, provided especially for its operation; consequently, the opportunity for the dispenser magazine being opened or removed from its support by an unauthorized person is reduced to a minimum.

I claim:—

1. In a dispenser, a magazine for holding articles to be dispensed, oscillatory separating devices adjacent to the path of movement of the articles in said magazine, each of said separating devices being provided with a segmental wing by which the articles are normally supported and with a V-shaped segmental flange adapted to enter between two adjacent articles to separate them from each other, and an oscillatory operating ring for oscillating said separating devices.

2. In a dispenser, a magazine for holding cups having lips, a series of cup separating devices adjacent to the cups, each of said cup separating devices being provided with a segmental supporting wing by which the cups are normally supported and with a segmental spreader flange adapted to enter between the lips of two adjacent cups to separate them from each other, and an operating member for oscillating all of said cup separating members to remove their segmental supporting wings from the lip of the lowermost cup and to insert their segmental spreader flanges between the lip of the lowermost cup and the lip of the next adjacent cup.

3. In a dispenser, a magazine for holding cups having lips, a series of cup separating devices adjacent to the cups, each of said cup separating devices being provided with a segmental supporting wing by which the cups are normally supported and with a segmental spreader flange adapted to enter between the lips of two adjacent cups to separate them from each other, and an oscillatory operating ring movably fitted to all of said cup separating members to serve as means for rocking the latter, thereby rocking their segmental supporting wings from the lip of the lowermost cup and inserting their segmental spreader flanges between the lip of the lowermost cup and the lip of the next adjacent cup.

4. In a dispenser, a magazine for holding cups having lips, a series of cup separating devices, each of said cup separating devices being provided with a segmental supporting member by which the cups are normally supported and with a segmental wedge

shaped portion having its point located in a plane above the top of the segmental supporting member, the bottom face of said wedge shaped portion being located in a plane below the top of said segmental supporting member, and means for oscillating said cup separating devices to remove said segmental supporting members from the lip of the lowermost cup and to insert said wedge shaped portions between the lip of the lowermost cup and the lip of the next adjacent cup.

L. S. FLATAU.

In the presence of—
E. B. LINN,
E. CLARK.