H. A. NEWCOMB.

METALLIC JOINT AND PROCESS OF MAKING THE SAME.

APPLICATION FILED OCT. 2, 1914.

1,272,700. Patented July 16, 1918.

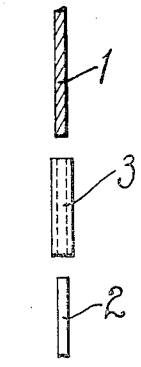

Fig. 1.

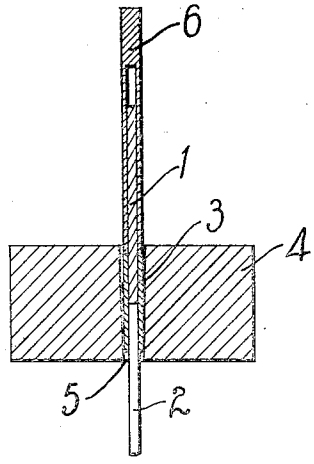

Fig. 2.

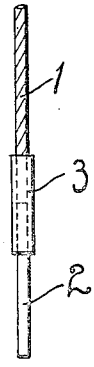

Fig. 3.

WITNESSES:

R. C. Fitzgerald

R. D. Brown

INVENTOR

Harold A. Newcomb.

BY

Burley & Carr

ATTORNEY

UNITED STATES PATENT OFFICE.

HAROLD A. NEWCOMB, OF WILKINSBURG, PENNSYLVANIA, ASSIGNOR TO WESTINGHOUSE ELECTRIC AND MANUFACTURING COMPANY, A CORPORATION OF PENNSYLVANIA.

METALLIC JOINT AND PROCESS OF MAKING THE SAME.

1,272,700. Specification of Letters Patent. **Patented July 16, 1918.**

Application filed October 2, 1914. Serial No. 864,581.

To all whom it may concern:

Be it known that I, HAROLD A. NEWCOMB, a citizen of the United States, and a resident of Wilkinsburg, in the county of Allegheny and State of Pennsylvania, have invented a new and useful Improvement in Metallic Joints and Processes of Making the Same, of which the following is a specification.

My invention relates to metallic joints and processes of making the same, and it has special reference to joints for intimately uniting bars, rods, wires and the like, which, on account of their physical form or the nature of the materials of which they are composed, cannot readily be united by ordinary methods, such as soldering, brazing or welding.

The general object of my invention is to provide a strong and durable joint that can be readily and quickly made without the application of external heat and without the exercise of more than ordinary mechanical skill. More particularly, my invention is intended for use in making integral electrical conductors from lengths of unlike conducting materials.

In the accompanying drawing, Figure 1 is a side elevational view showing the elements of my metallic joints before they are assembled, Fig. 2 is a longitudinal sectional view showing the same elements in position to be united within a die, and Fig. 3 is a side elevational view showing a completed joint or connection.

In the manufacture of electrical apparatus, it is frequently desirable to attach copper terminals to conductors of other metals, such as tungsten or aluminum, and much difficulty has heretofore been experienced in making intimate joints between the ends of such conductors of unlike material. For other purposes, such as the manufacture of terminals for rectifiers and other forms of vapor electric apparatus, it is found necessary to unite a single wire or rod to a conductor that is composed of a number of small wires braided or twisted together, and the large number of separate conductors which must be united to the single rod or wire renders it difficult to make such a joint, even though all of the conductors are of the same material.

In order to overcome the difficulties suggested above, and also to render unnecessary any special skill on the part of the operator or the application of external heat, I inclose one end of each of the bodies to be united within a short tube of readily malleable material, such as thoroughly annealed seamless copper tubing. I then drive the short tube through a die having a tapered aperture, in such a manner that the tube is tightly compressed around the inclosed ends of the conductors. The conductors are preferably provided with swaging marks or notches, which assist the copper in gripping the conductors.

The accompanying drawing illustrates the manner in which my invention is applied in joining a rod or wire to a flexible conductor composed of a number of twisted strands of fine wire. The flexible conductor is indicated at 1, the solid bar or wire at 2 and the bushing or tube by means of which the two conductors are connected is indicated at 3. These elements are assembled in the manner shown in Fig. 2, the conductors 1 and 2 being thrust through opposite ends of the tube 3 and engaging each other about midway of the tube. The tube containing the ends of the conductors, as shown, is then placed in a die 4 having an opening 5 that is of slightly tapering diameter. A hollow plunger 6, the internal diameter of which is sufficient to receive the conductor 1 and the external diameter of which is approximately equal to the smallest diameter of the opening 5 in the die 4, is then placed over the conductor 1 in the manner shown, and is driven downwardly by means of a hammer or otherwise. The tube 3 is thereby compressed and caused to grip tightly the ends of the conductors 1 and 2. The joint shown in Fig. 3 is particularly useful in making terminal connections for mercury vapor rectifiers, in which case the flexible conductor 1 may be of copper and the rod 2 of tungsten, molybdenum or platinum.

A particularly advantageous feature of joints made in the manner described above is the very intimate union between the materials which compose them. When the joints are made between copper and tungsten, for example, the copper is forced into such intimate contact with the tungsten that it actually alloys with it, or "wets" it, a phenomenon which is probably assisted by the internal heat developed in the metals

as they are driven through the die. It has not heretofore been possible to effect such close union between metals by purely mechanical means and without the application of external heat.

The die 4 may conveniently consist of a block of steel provided with a plurality of openings 6 of definite sizes corresponding to the sizes of a series of standard conductors.

Many modifications of the process which I have described may readily be devised by persons skilled in the art to which my invention appertains, and it is therefore to be understood that my invention is not restricted to the precise example which I have described, but that it is limited only by the scope of the appended claims.

I claim as my invention:

1. A joint for connecting bars, wires and the like, that comprises an annular body of malleable material compressed substantially uniformly around the adjacent ends of the joined bodies.

2. A joint for connecting bars, wires and the like, that comprises an annular body of malleable metal tightly and uniformly compressed around the adjacent ends of the joined bodies.

3. A joint for connecting the ends of bars, wires and like bodies of unlike materials that comprises a metal tube uniformly swaged around the adjacent ends of the joined bodies.

4. A joint for connecting a tungsten bar or wire to a similar body of copper that consists in a copper tube uniformly swaged around the adjacent ends of the joined bodies.

5. A new article of manufacture comprising two rods or wires joined by an annular body of malleable material uniformly compressed around the adjacent ends of the joined bodies.

6. A new article of manufacture comprising two rods or wires joined by a malleable tube uniformly swaged around the adjacent ends of the joined bodies.

7. A new article of manufacture comprising a rod or wire joined to a braided or twisted strand by means of an annular body of malleable material compressed uniformly around the adjacent ends of the joined bodies.

8. A new article of manufacture comprising a rod or wire of a refractory metal of the tungsten type joined to a braided or twisted strand composed of a plurality of copper wires by means of a malleable tube uniformly swaged around the adjacent ends of the joined bodies.

9. A spliced joint for connecting abutting ends of cylindrical metallic bodies comprising a seamless metallic tube uniformly and radially pressed from all sides into intimate engagement with the ends of the bodies.

10. A spliced joint for connecting a rod or wire to a braided or twisted strand comprising a seamless copper tube of uniform thickness radially and uniformly pressed from all sides into intimate engagement with the ends of the joined bodies.

In testimony whereof, I have hereunto subscribed my name this 28th day of Sept., 1914.

HAROLD A. NEWCOMB.

Witnesses:

WM. F. EGAN, Jr.,

B. B. HINES.