J. A. DOBLE.

FUEL BURNER.

APPLICATION FILED MAR. 8, 1917.

1,316,021.

Patented Sept. 16, 1919.

2 SHEETS—SHEET 1.

Fig. 1

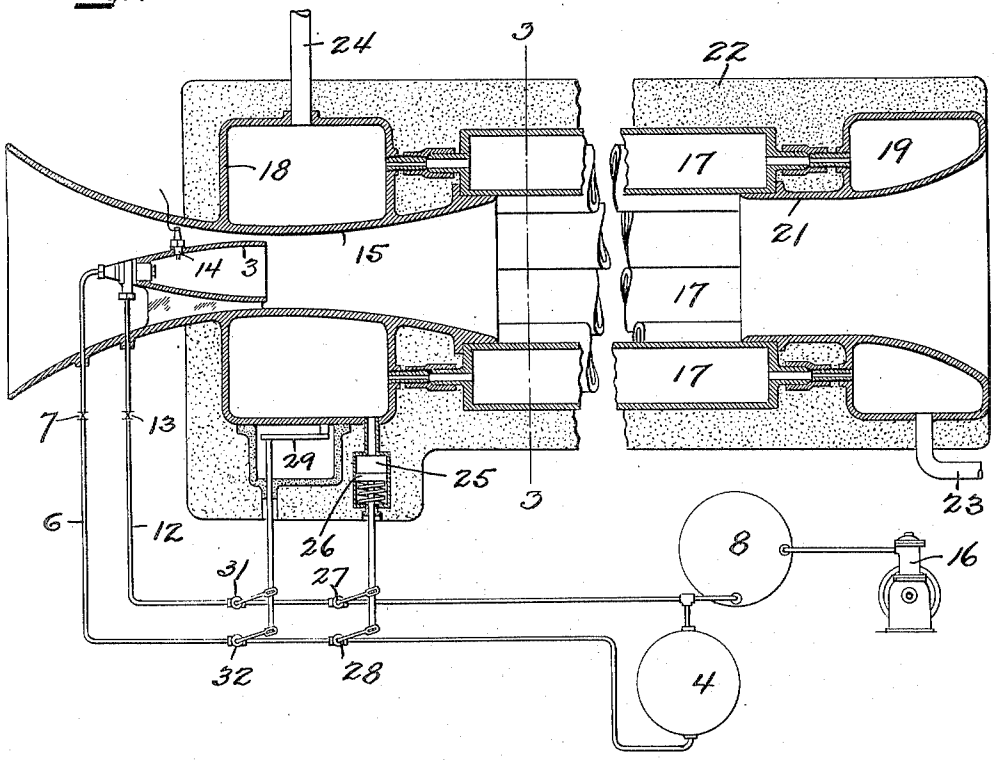

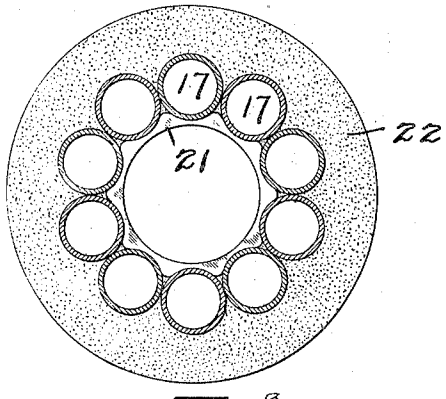

Fig. 3

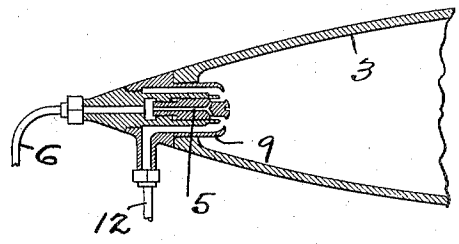

Fig. 2

WITNESS

J. B. Gardner

INVENTOR.

J. A. DOBLE

BY White & Dust

HIS ATTORNEYS

J. A. DOBLE.

FUEL BURNER.

APPLICATION FILED MAR. 8, 1917.

1,316,021.

Patented Sept. 16, 1919.

2 SHEETS—SHEET 2.

Fig. 5

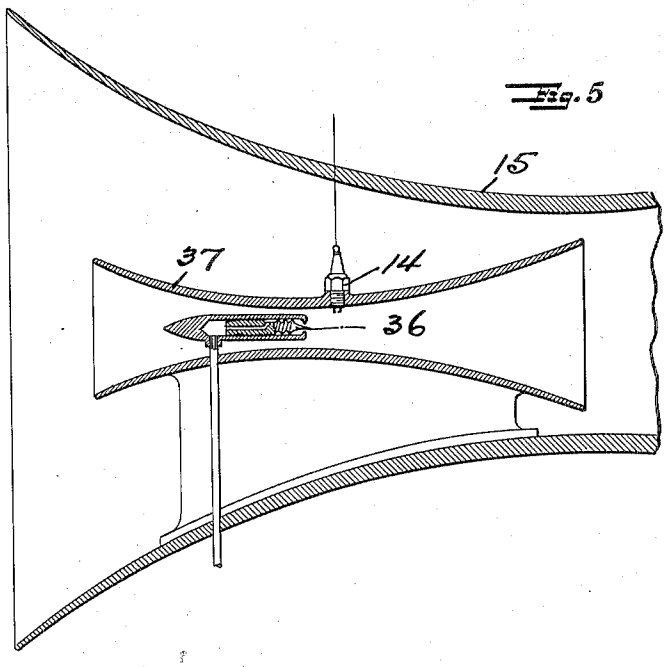

Fig. 4

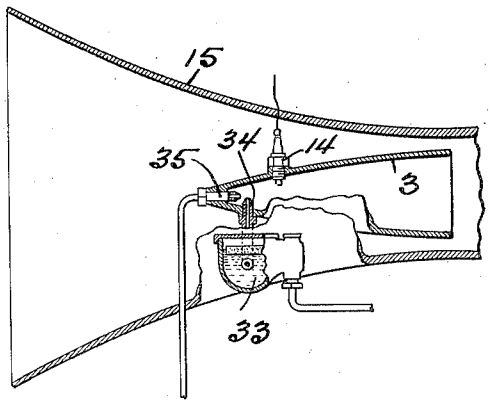

WITNESS

J. B. Gardner

INVENTOR.

J. A. DOBLE

BY White & Frost.

HIS ATTORNEYS

UNITED STATES PATENT OFFICE.

JOHN A. DOBLE, OF SAN FRANCISCO, CALIFORNIA, ASSIGNOR TO DOBLE LABORATORIES, OF SAN FRANCISCO, CALIFORNIA, A CORPORATION OF CALIFORNIA.

FUEL-BURNER.

1,316,021. Specification of Letters Patent. **Patented Sept. 16, 1919.**

Application filed March 8, 1917. Serial No. 153,225.

To all whom it may concern:

Be it known that I, JOHN A. DOBLE, a citizen of the United States, and a resident of the city and county of San Francisco and State of California, have invented certain new and useful Fuel-Burners, of which the following is a specification.

The invention relates to fuel burners and particularly to liquid or gaseous fuel burners.

An object of the invention is to provide a method of burning fuel whereby gases of high velocity are produced.

Another object of the invention is to provide a fuel burner in which the kinetic energy of the burning fuel induces sufficient air into the burner to complete combustion of the fuel.

Another object of the invention is to provide a fuel burner in which the blower for supplying auxiliary air for completing combustion is eliminated.

A further object of the invention may be to provide a steam generating unit which has a large capacity in proportion to its size and which is highly efficient.

The invention possesses other advantageous features, some of which, with the foregoing, will be set forth at length in the following description where I shall outline in full, that form of the invention which I have selected for illustration in the drawings accompanying and forming part of the present specification. In said drawing I have shown one specific embodiment of my generic invention and several modifications thereof, but it is to be understood that I do not limit myself to such forms, since the invention as expressed in the claims may be embodied in a plurality of forms.

Referring to the drawings:

Figure 1 is a longitudinal section of one form of burner of my invention associated with a steam generator, part thereof being broken away to reduce the size of the figure.

Fig. 2 is a longitudinal section on a larger scale of the air and fuel nozzle and a portion of the spraying chamber.

Fig. 3 is a cross section of the steam generator taken on the line 3—3, Fig. 1.

Fig. 4 is a longitudinal section of a modified form of burner.

Fig. 5 is a longitudinal section of a burner in which high pressure air for spraying the fuel is eliminated.

The burner of my invention may be employed for the production of power in engines and turbines or for heating or for other useful purposes and it is to be understood that I do not limit myself to any particular use of the burner. The burner of my invention is designed for use in connection with steam generators and other heat-absorbing medium containing devices in which a pressure is produced in the combustion chamber during the operation of the burner in contradistinction to those heat-absorbing mediums containing devices which are provided with a stack or other draft-producing means for creating a reduction of pressure in the combustion chamber. The burner is particularly applicable to steam generators for steam-propelled automobiles and similar vehicles, air-craft, submarines and isolated heating plants and devices which cannot be readily provided with stacks or other draft producing means. In the burner of my invention I produce initial ignition of a mixture of fuel and insufficient air to produce complete combustion and cause the velocity or kinetic energy of the flame so produced to induce sufficient air into the burner to complete the combustion of the fuel. This additional air causes complete combustion of the fuel and on account of the expansion of the air and the gases of combustion due to the complete combustion, a stream of gas of high velocity is produced. This high velocity gas can be effectively utilized to produce power by feeding it directly to the blades of a turbine, constructed on the general principle of steam turbine blades.

The burner comprises a cup or shell 3, preferably elongated in form, in the end of which are arranged fuel and air nozzles in atomizing relation. Fuel under pressure and preferably liquid fuel, such as kerosene, distillate or heavy oil, from a suitable source, such as the tank 4, is introduced into the oil nozzle 5 through the pipe 6, which is provided with a manually operated valve 7. Air under pressure from a suitable source, such as the tank 8, is introduced into the air nozzle 9 through the pipe 12 which is provided with a manually operated valve 13. The nozzles are so arranged that the fuel spray produced thereby is directed toward the open end of the shell 3. Arranged in the shell, in front of the nozzles, is a spark plug 14 or

other ignition device for igniting the combustible mixture. The air in this mixture is preferably only that which it has been necessary to employ to spray the fuel and is insufficient to complete combustion, but is sufficient to allow the mixture to become ignited. The burning of the mixture greatly increases its volume, so that the burning mixture is expelled from the shell at a high velocity.

Surrounding the shell 3 and supporting the shell is a tube 15, preferably a Venturi tube having a flaring outlet, with its narrow portion adjacent the discharge end of the shell 3. The kinetic energy of the high velocity gases discharging from the shell into the Venturi tube cause air to be drawn into the tube and past the end of the shell and to mix with the burning mixture, thereby producing complete combustion and increasing the velocity of the gases. For a given sized opening between the shell and the venturi, the amount of air drawn in will vary with the amount of fuel discharged from the nozzle and the opening is preferably made of such size that the amount of air drawn in is that which is required for complete combustion of the fuel, although for turbine use, a greater amount of air may be introduced. From the end of the shell, the Venturi tube flares out into the steam generator or other apparatus. When used in connection with a heat-absoring medium containing apparatus, the venturi is short, so that the mixture is burned within the apparatus, but when used in connection with a turbine, the flaring mouthed tube is preferably of such length that combustion is complete before the gases contact with the turbine blades. The expansion of the gases in the flaring mouth cools them and increases their velocity, so that they enter the turbine runner at high velocity. In Fig. 1 I have shown the burner in connection with a steam generator which is particularly applicable to steam automobile practice. When the burner is employed to generate steam for operating an engine, the pressure air and the pressure on the fuel is preferably produced by a pump 16, connected to the engine, but when the burner is employed for other uses, the pressure may be produced in any desirable manner.

The steam generator shown in Figs. 1 and 3 comprises a plurality of contiguous parallel tubes 17 arranged about a common center, so that a combustion chamber is formed within the bunch of tubes. This arrangement produces a large tube area in contact with the fire and the hot gases, and on account of the relatively small diameter of the tubes, permits the use of comparatively light weight tubes, which will withstand the pressure produced within them. The tubes are long and are connected at their ends to headers 18—19. The steam header 18 is preferably formed integral with the Venturi tube 15 and the outlet mouth of the Venturi tube is provided on its circumference with seats for the tubes 17. The feed water header 19 is provided with a neck 21 which is similarly provided with seats and has a flaring passage therethrough to assist in the discharge of the gases from the generator. The headers and tubes are surrounded with a casing 22 of heat-insulating material. The feed water is introduced into the header 19 through the pipe 23 and the steam discharges from header 18 through the pipe 24.

Means are provided for varying the flow of air and fuel to the nozzle in accordance with variations in conditions in the steam generating unit. Communicating with the header 18 is a cylinder 25 having a spring loaded piston 26 which is operatively connected to valves 27 and 28 in the air and fuel pipes respectively, so that an increase in pressure reduces the air and oil supply and vice versa. Arranged in thermal communication with the header 18 is a thermostat 29 which is operatively connected to valves 31 and 32 in the air and fuel lines respectively, so that the amount of air and fuel fed to the nozzle varies with the steam temperature.

In Fig. 4 I have shown a modified form of construction in which the fuel, instead of being introduced into the nozzle under pressure is introduced into a float chamber 33 to which the fuel nozzle 34 is connected. The air nozzle 35 is arranged in atomizing relation with the fuel nozzle and the air discharging from the nozzle 35 raises the fuel in nozzle 34 and blows it into a spray. This obviates the necessity of carrying the fuel under pressure or of introducing it under pressure into the nozzle.

In Fig. 5 I have shown a modification in which the air under pressure is eliminated and the fuel spray produced by the pressure of the fuel. The fuel spray nozzle 36, to which the fuel is fed under pressure, is arranged in the Venturi tube 37 which is supported within the Venturi tube 15. The nozzle discharge end is arranged at the narrow portion of the venturi 37 and is constructed to project a spray of fuel in the direction of the length of the venturi 37. The spark plug 14 is arranged adjacent the nozzle and the kinetic energy of the spray causes a flow of the air through the venturi 37 in sufficient quantity to establish combustion. The burning mixture discharges from the venturi 37 into the venturi 15 at its narrow portion and the kinetic energy of the burning mixture induces a sufficient supply of auxiliary air through the venturi 15 to complete combustion.

I claim:

1. The method of burning liquid fuel

which consists in projecting a spray of the liquid fuel and an amount of air sufficient only to spray the fuel, igniting the spray thus produced whereby a flame is produced and passing said flame in inductive relation to the external air whereby such air is drawn into contact with the flame, the amount of air induced by the velocity of the flame being sufficient to complete the combustion of the liquid fuel.

2. A fuel burner comprising a chamber having an open end, a Venturi tube surrounding and spaced from said chamber and extending beyond the open end thereof, means for producing a spray of fuel and air in the chamber directed toward the open end thereof and means within the chamber for igniting said mixture.

3. In a fuel burner, a Venturi tube open to the air at one end and means in the tube for producing an ignited incompletely combustible mixture projected in the direction of the axis of the tube.

4. In a fuel burner, a Venturi tube open to the air at one end, a chamber arranged in the tube and spaced therefrom, having its opened end disposed at the narrow portion of the tube, means in the chamber for producing a spray of fuel and air and means in the chamber for igniting said spray, whereby a high velocity flame in the direction of the axis of the tube is produced.

5. In a fuel burner, an open end chamber, a fuel nozzle and an air nozzle in atomizing relation in this chamber, means for feeding fuel and air to said nozzles in such proportion that an incompletely combustible mixture is produced, an ignition device arranged in said chamber and an open ended tube of larger diameter than said chamber surrounding the discharge end of said chamber and into which the ignited incompletely combustible mixture is projected, the kinetic energy of the flame discharging from the chamber causing the flow of air through the tube and into the flame to complete combustion of the fuel.

In testimony whereof, I have hereunto set my hand at San Francisco, California, this 3rd day of March, 1917.

JOHN A. DOBLE.

In presence of—
H. G. PROST.