Jan. 9, 1940. W. TAMMINGA 2,186,082

MILK DISPENSER

Filed July 30, 1937

Fig. 1

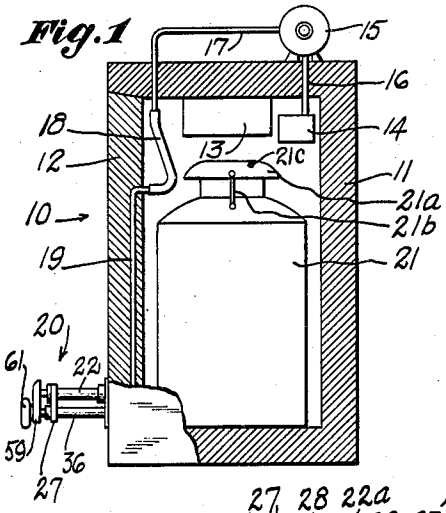

Fig. 3

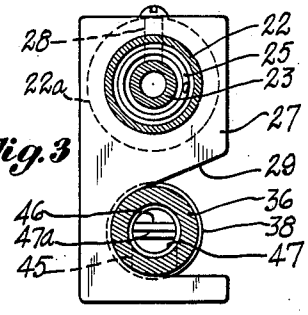

Fig. 2

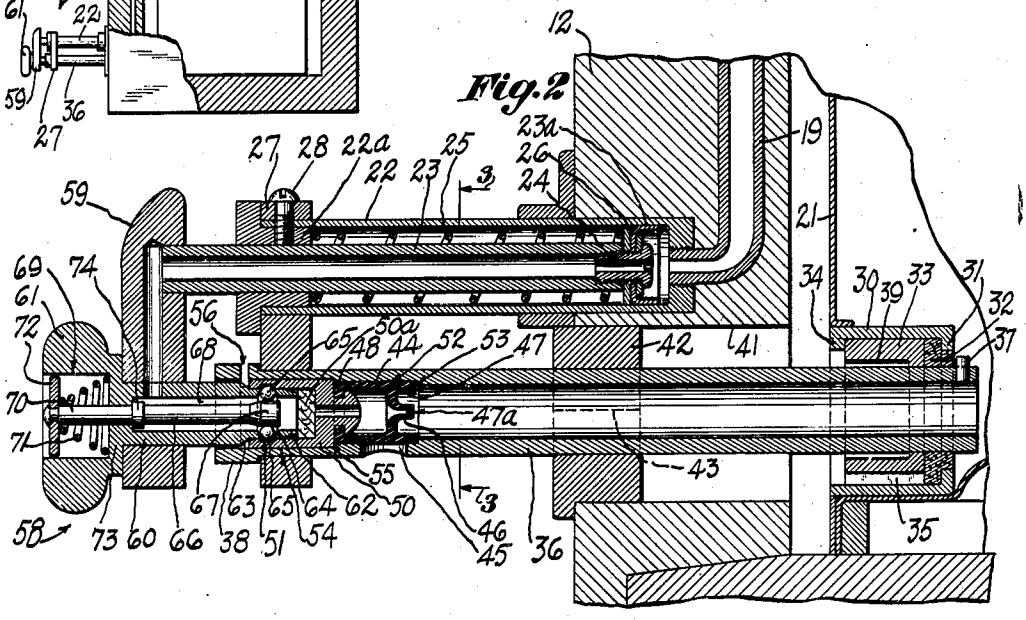

Fig. 4

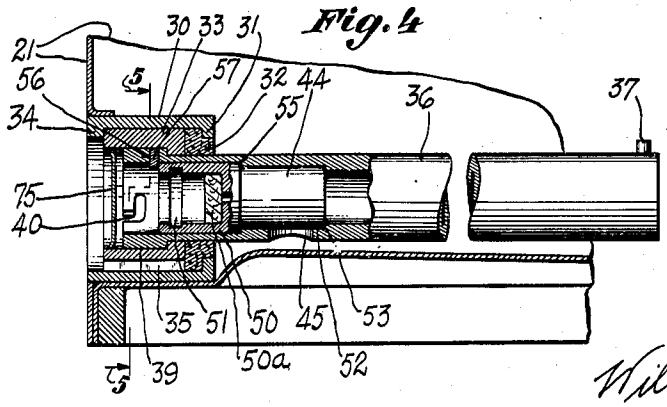

Fig. 5

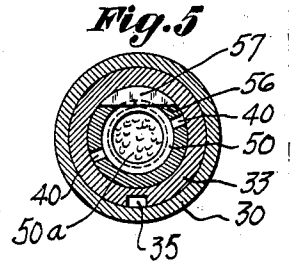

William Tamminga INVENTOR.

BY Luis Shumacher ATTORNEY.

Patented Jan. 9, 1940 2,186,082

UNITED STATES PATENT OFFICE

2,186,082

MILK DISPENSER

William Tamminga, New York, N. Y., assignor to Monitor Process Corporation, a corporation of New Jersey

Application July 30, 1937, Serial No. 156,467

48 Claims. (Cl. 221—67)

This invention relates to devices such as liquid dispensers and has particular reference to milk dispensers in which its advantages are best realized.

One object of the invention is the provision of a device of the character described including improved unitary valve means for the control of the liquid and the agitating fluid or air.

Another object of the invention is the provision of a device of the nature set forth wherein the liquid is dispensed at will, and air for agitating the liquid periodically charged into the device, including a telescopic dispensing unit having a simplified valve means received therein and arranged so that parts of the unit may be directly inserted into the liquid container for cleaning or sterilizing therewith.

Another object of the invention is to provide improved means such that all parts of the dispensing unit which come in contact with the liquid shall be so connected with the liquid container as to be reshipped therewith to the bottling or milk plant for cleaning.

Other objects of the invention are to provide a dispensing unit having an improved check valve operative as a closure for a liquid container in course of shipment thereof; an improved combined check and slide valve having an annular flange for uniform flow of liquid past the valve; improved means for releasably locking a slide tube to the container; improved means for removably retaining the valve unit in the slide tube; improved means for releasably locking a handle to the valve unit; improved means such that the handle constitutes a part of the air flow passage; improved means for swingably mounting the handle; improved means whereby the air connection is movable with the handle without disturbing the handle lock; improved means whereby the air connection includes means for retracting the liquid valve; improved means whereby the air connection is arranged so as to avoid any interference with the slide tube; and, further, an improved arrangement such that the features mentioned are wholly consistent with the telescopic principle aforementioned.

Another object of the invention is to furnish a liquid dispenser comprising gaseous agitating means for the liquid according to an improved arrangement and construction such that the gas or air is circulated through the dispenser and a normally closed refrigerator for the liquid container, whereby the air may be kept clean and used as a heat conducting medium to increase the refrigerating efficiency.

A further object of the invention is to provide a device having relatively few and simple parts and which is inexpensive to manufacture and assemble, durable, convenient, rapid and efficient in use and especially adapted to meet the requirements of the most rigid sanitary code.

Other objects and advantages of the invention will become apparent as the specification proceeds.

In the drawing:

Figure 1 is a view in vertical section showing a device embodying the invention.

Fig. 2 is an enlarged sectional view of the main portion of the dispensing unit.

Fig. 3 is a sectional view taken on the line 3—3 of Fig. 2.

Fig. 4 is a fragmentary sectional view of a portion of the dispensing unit collapsed for shipment.

Fig. 5 is a sectional view taken on the broken line 5—5 of Fig. 4.

The advantages of the invention as here outlined are best realized when all of its features and instrumentalities are combined in one and the same structure, but, useful devices may be produced embodying less than the whole.

It will be obvious to those skilled in the art to which the invention appertains, that the same may be incorporated in several different constructions. The accompanying drawing, therefore, is submitted merely as showing the preferred exemplification of the invention.

Referring in detail to the drawing, 10 denotes a liquid dispenser embodying the invention. The same may also be considered as a combined refrigerating, agitating and liquid dispensing device. It may include a refrigerator chamber 11 having a front door 12 hingedly mounted so as to be swingable about a vertical side edge thereof. Within the chamber 11 is a refrigerating unit 13 and an air filter 14, the latter for a purpose hereinafter described. Mounted on the chamber 11 is an air pump 15 having its inlet connected by a pipe 16 with the filter 14. From the outlet of the pump extends a pipe 17 which enters the chamber 11 and is connected by a piece of flexible tubing 18 with a pipe 19 that may be embedded in the door 12. The pipe 19 may communicate with a liquid dispensing unit 20 that is outwardly mounted on the door 12 and connected with a liquid or milk container 21. Closing the container 21 is a removable loosely fitting cover 21a attached to the container by a breakable seal 21b.

Upon operation of the pump 15, air flows

through the line 17, 18, 19 and the dispensing unit 20 into the container 21 to agitate the liquid therein. Hence the air escapes at the loosely fitting cover 21a into the chamber 11, is received in the filter 14 and recirculated. The flexible connection 18 allows the door 12 to be opened and closed, and is preferably located near the door hinge to permit the use of a short piece of rubber hose.

The pipe 19 is connected to the inner end of a tubular casing 22 which is affixed to the door 12. Closing the outer end of the casing 22 is a bushing 22a through which is slidable a hollow stem 23 which carries at its inner end any suitable packing 23a, such as an expandible leather cup. Securing the latter to the stem 23 is a hollow screw element 24 which is adapted to communicate with the pipe 19. For retraction of the stem or tube 23, an expansion coil spring 25 may extend around the same within the casing 22 so as to act between the bushing 22a and a washer 26 which forms a backing for the packing 23a. The relation of the casing 22 and its associated parts is coaxial.

Mounted on the casing 22 is a bracket or plate 27 secured by a set screw 28. As shown in Fig. 3, this bracket may receive the casing 22 in an opening thereof and may have a cut out 29 in its lower portion for a purpose hereinafter described.

The container 21 is provided near its bottom with a permanently connected inward extending bushing 30 having at its inner end an inturned annular lip 31, to thus retain an inner packing ring 32 and a tubular element 33. At its forward end, the bushing 30 may have a short radial tongue 34 to retain the element 33. The latter may have a longitudinal slot or recess 35 so that when the element 33 is turned to bring the slot into register with the tongue 34, the element 33 may be removed.

Disposed within the elements 32, 33 is a slide tube 36, retained in liquid tight relation by the packing 32. At its inner end, the slide tube 36 may have a stop pin 37 to limit its outward movement as shown in Fig. 2. At its forward end, the slide tube may have an annular enlargement 38, which, in the retracted position of the slide tube shown in Fig. 4, is receivable in an annular cut out or recess 39 of the element 33, the rest of the slide tube projecting inward into the container 21. For withdrawing the slide tube 36 from retracted position, the latter may have along its internal surface near its forward end one or more bayonet slots 40 or the like so that a tool may be inserted to engage the slide tube 36. As shown in Fig. 2, the slide tube extends outward through an opening 41 in the door 12, said opening being closed by a removable ring packing 42, split at 43.

Within the forward end portion of the slide tube 36 is reciprocable a valve unit 44 that controls a liquid outlet opening 45 in the slide tube. The said valve preferably consists of rubber and is of generally tubular form with a diametral end projection 46 longitudinally slitted at 47a. Surrounding the projection 46 is an integral annular reenforcing flow controlling or directing flange 47 which projects somewhat beyond the portion 46. At its other end, the valve may have an annular inturned lip 48 removably engageable around a hollow neck 49 of a nipple 50. At its forward end the latter may have an internal annular slot 51 for attachment to an actuator as hereinafter described.

To aid in valve sealing action, the slide tube 36 may have an annular recess or seat 52 for the valve, forming an annular shoulder 53 for abutment with the flange 47. As a stop to limit inward movement of the valve, the slide tube may have an annular recess 54 forming an annular shoulder 55 for abutment with an edge of the nipple 50. The arrangement is such that the valve and nipple can be withdrawn as a unit from the slide tube 36 at the forward end thereof.

Since the unit 44, 50 is preferably freely slidable in the tube 36, and there may be considerable liquid pressure on the valve 44, some releasable means may be desirable to prevent the valve, during shipment of the container 21, from accidentally moving outward and opening the outlet 45. Hence the slide tube 36 may have a slot 56 for snugly receiving a plate 57 that is in the form of a segment of a circle, said plate being positioned as shown in Fig. 4 to project into the tube 36 and form an abutment for the end of the nipple 50.

An actuator 58 for the valve unit 44 forms a combined air flow passage, and a means for automatic positive locking engagement with the nipple 50, and preferably also automatically wholly or partially dislodges the wedge or stop element 57. Said actuator may be mounted on a tube 59 rigidly connected to the forward end of the air flow tube 23, and may include a coupling tube 60 rigidly connected to the tube 59 and swingable about the axis of the tube 23 into and out of alinement with the slide tube 36. The tube 60 may have at its forward end an enlargement or knob 61 whereby it may be caused to move the coupling tube 60 into and out of the slide tube 36, and to reciprocate the valve 44, the air flow tube 23 moving with the latter, and the spring 25 tending to cause closing movement of the valve 44. At its inner end, the coupling tube 60 may have an annularly reduced tubular extension 62, that may be slightly conoidal in shape, for insertion into the nipple 50. At the junction of the extension 62 and the main part of the coupling tube 60 is an annular beveled portion 63 adapted to act upon the bottom edge of the wedge plate 57 to force the same outward to permit projection of the nipple 50. In the wall of the extension 62 are formed diametrically opposed holes 64 for receiving locking balls 65 that are adapted to enter the groove 51 of the nipple as hereinafter described.

For actuating the balls 65, the coupling tube 60 may have a rod 66 slidable therein having at its inner end an annular enlargement or cam 67 such that when the rod is moved forward the cam presses the balls 65 outward into the groove 51, and when the rod is moved inward, the rod affords an annular space for balls to move inward out of the groove 51, but with the rod being of sufficient diameter to prevent the balls from leaving their holes 64 and dropping into the coupling tube 60. The rod and its cam are smaller than the internal diameter of the coupling tube to form an annular air passage 68 between the tube 59 and the nipple 50. If desired, the holes 64 may be outwardly tapered to permit the balls 65 to move suitably outward but without falling out of the said holes 64 when the coupling tube is removed from the slide tube 36.

As a control for the rod 66, the knob 61 may be centrally chambered at 69 to receive a forward end 70 of the rod 66, an expansion coil spring 71 extending around the element 70 and acting between a stop disc 72 fixed to the element 70 and a knob wall 73 in which the element 70 is snugly slidable. Movement of the rod 66 by the spring

71 is limited by a projection 74 formed on the rod 66 and adapted to abut the opposite side of the knob wall 73.

The operation of the device will now be described. When the operator requires milk, he pulls outward on the knob 61 so that the coupling or stem 60 pulls outward on the nipple 50 and hence on the valve unit 44 so that the latter opens the outlet 45. Liquid may now flow from the container 21 through the slide tube 36 to the outlet 45. The flange 47 causes a uniform flow of liquid. Assume that this flange were omitted, the projection 46 might be vertical or at an angle or horizontal as shown. In the latter position, this projection 46 would extend over the outlet 45 and cause a swirling or splashing flow of the liquid. Thus the character of the flow would vary from time to time. Further retraction of the valve 44 is undesirable because compactness demands a short throw of the valve. The flange 47 also serves as a reenforcement for the projecting check valve portion 46 and tends to prevent buckling thereof.

In moving the knob 61 outward, the tubular elements 59 and 23 move correspondingly outward but the air passages are maintained. When the knob is released, the spring 25 causes a reverse movement of the parts and the valve 44 closes in abutment with the sealing shoulder 53.

At certain time intervals, the pump 15 is manually or automatically caused to operate to pump air through the pipes 17, 19, 22, 59, through the annular passage 68, nipple 50 into the valve 44. In fact, the device 15 may be regarded as an automatic intermittently operating compressor. Thus expansion is caused of the slitted check valve projection 46, so that the air flows through the slide tube 36 and into the container 21 to bubble upward through the liquid and agitate the same. The air leaves the container at the loose fitting cover 21*a* and flows into the refrigerator 11 where it enters the filter 14 to be recirculated. Thus the air is kept clean, and cold air from the neighborhood of the cooler 13 is circulated through the liquid to increase refrigeration efficiency.

The check valve 46 closes automatically to prevent liquid from flowing into the valve 44.

If all the milk in the container has been consumed, the operator presses the disc 72 inward so as to inwardly move the rod 66 and permit the balls 65 to release the nipple 50. In this position the knob 61 is pulled outward to withdraw the coupling 60 from the slide tube 36. Now the coupling 60 is swung laterally about the axis of the tube 23. The container 21 may now be moved laterally to move the tube 36 out of the opening 29 of the bracket 27. Then the slide tube 36 is pushed all the way into the container as shown in Fig. 4, and the container is shipped to the bottling or milk plant.

There the tube 33 is turned to aline the recess 35 with the tongue 34, and the tube 33 is withdrawn. This permits removal of the packing 32 and the slide tube 36. The valve 44 may be removed and cleaned. Now the parts 44, 50, 36, 32, 33 are reassembled with the container 21, the wedge stop plate 57 having been inserted to be thus retained by the element 33. A dust cover plate 75 may be forced into the element 33. The container and its parts are then sterilized, filled with liquid, closed and sealed at 21*b*, and the container is shipped out.

Upon receipt of the container 21, the disc 75 is pried out, and a tool engaged with the bayonet slots 48, so that the slide tube 36 may be pulled out, the container 21 having been placed in the refrigerator 11. The slide tube is engaged with the bracket 27, and the operator inserts the coupling 60 into the slide tube while pressing inward on the disc 72 to cause the interlocking at 65 with the nipple 50. In inserting the coupling, the nipple 50 rests against the shoulder 55 as an abutment. The wedge plate 57 has been removed, and the machine is ready for use.

The cover 21*a* may have a vent hole 21*c* if desired.

The nipple 50 may have a filter 50*a* disposed therein and held by the tube 68. This filter should be replaced daily.

I claim:

1. A liquid dispenser including a container having an outlet member, a movable valve in said member for controlling the same, said valve having an integral elastic automatically closing hollow portion, means for forcing a gaseous fluid through said valve portion into the container through said member, said valve portion being adapted to act as a check valve to prevent liquid from flowing thereinto.

2. A liquid dispenser including a container, an outlet tube connected to the container so as to be slidable thereinto, said outlet tube having a lateral opening, a hollow rubber valve slidable in the tube for closing said opening, said valve having a projecting slitted check valve portion which is self closing to prevent liquid from flowing into the valve, and means for forcing a flow of air into the container through the check valve portion.

3. A dispensing device including a liquid container, an outlet tube connected thereto so as to be slidable into the container, means for supplying a gaseous fluid to the container through said tube, and elastic piston valve means in the tube for controlling outflow of liquid and having a slitted self closing portion for permitting inflow of the gaseous fluid while preventing outflow of liquid, said valve means being at all times normally housed in the tube, and the latter having a liquid outlet controlled by sliding movement of the valve means.

4. A dispensing device including a liquid container, an outlet tube slidably connected thereto, means for supplying air under pressure to the container through said tube, and a hollow rubber valve movable in the tube to control a lateral outlet opening thereof, said valve, in open position, being located on a side of the outlet opening furthest from the container, said valve having a slitted self closing portion projecting toward the container, said valve having an annular flange around said valve portion for controlling the liquid flow through said outlet opening, and the air pressure being adapted to open said valve portion.

5. A dispensing device including a container, a valve controlled slidable outlet tube, and means slidably connecting the latter with the container, including elements releasably interlocked, one of the elements being removable and serving to retain a packing ring about the outlet tube, the other element being connected to the container, and the tube having means to prevent removal of the tube without removal of the removable element.

6. A dispensing device including a liquid container, an outlet tube connected to the container so as to slide into and out of the same, and a valve for the tube housed in the same so as to lie

within the container when the tube is moved thereinto, said valve having a self closing portion to control admission of a gas to the container, and a detachable hollow gas supply stem for the valve communicating with said portion.

7. A liquid dispenser including a container, an outlet tube connected to the container so as to slide wholly into the same and outward thereof, and an elastic discardable valve unit including a valve portion to control outflow of liquid from the tube and inflow of air pressure into the tube, said valve unit being housed removably in the tube, a nipple detachably connected to the valve unit, a hollow air supply stem for the latter, an externally accessible means detachably locking the stem to the nipple.

8. A liquid dispenser including a container, an outlet tube connected to the container for sliding thereinto, an elastic piston type valve for controlling said tube and having a self closing air inlet portion, and means for releasably retaining the valve in the tube against relative opening movement of the valve, said means having direct positive locking engagement with the tube in a recess thereof.

9. A liquid dispenser including a refrigerator, a liquid container therein, air propelling means, and means to cause the air propelling means to circulate air from the refrigerator through the container to cause cold air to agitate the liquid in the container.

10. A liquid dispenser including a container, an outlet tube slidably connected thereto, a valve for said tube, means for supplying air pressure to said tube, including a tubular element releasably coupled with the valve for operating the same.

11. A dispensing device including a container having an outlet tube and a valve therein, an actuator for the valve having releasable means for positive connection with the valve, said means including a first member having an opening and a lock element therein, a second member having cam coaction with the lock element, and said members being relatively movable to control the lock element, the valve having a recess portion engageable by the lock element, and means urging one of said members to cause locking movement of the lock element, and said outlet tube having guiding coaction with one of the members.

12. A dispensing device including a container having a tube having a side outlet, a valve for controlling said outlet, said valve having an automatically closable check valve portion openable by a flow of gas through said tube into the container, a valve stem having a passage for conducting said gas to said valve portion, and an element in the stem passage for causing releasable connection between said stem and said valve.

13. A liquid dispenser including a container having an outlet, a slide valve for controlling said outlet, a telescopic air connection for supplying air to the valve, the valve having a valve portion to control flow of said air into the container, and a tubular stem for the valve connected to a movable element of the telescopic connection.

14. A dispensing device including a liquid container having an outlet, a valve for the outlet, a releasable lock to hold the valve closed, and an actuator for the valve detachably connected thereto and coacting with the lock to release the same upon connecting the actuator to the valve.

15. A dispensing device including a liquid container, an outlet tube slidably connected thereto, a valve for said tube, a refrigerator adapted to receive the container, and an actuator for the valve permanently mounted on the refrigerator and being detachably engaged with the valve.

16. A dispensing device including a container having an outlet and a valve controlling the same, means for charging air into the container through said outlet, said means having a rotatable joint, and a detachable acutator for the valve alined therewith and being mounted on a portion of said joint so as to be swingable into and out of alinement with the valve.

17. A liquid dispenser including a container, an outlet tube connected to the container so as to be slidable thereinto, a valve in the tube, means for releasably locking the valve in closed position, and the tube being rotatable and having means for rotatably releasably locking the tube to the container when the tube is slid into the container.

18. A liquid dispenser including a container having an outlet member, an elastic piston valve, said member having a side outlet closable by said valve, the latter being hollow and having a slitted self closing axial projection, means for forcing a gas into the container with the projection being opened by the pressure of the gas, and said valve having a generally annular flange partially spaced from and surrounding said projection so that the latter lies substantially within the space defined by the flange, said flange having generally circular contact with the outlet member so as to control the degree of opening of the side outlet.

19. A liquid dispenser including a container, an outlet tube slidable thereinto, a valve in the tube, said valve having a self closing portion for admitting air into the container while preventing the outflow of liquid, a hollow stem for the valve adapted to supply air thereto, said stem being alined with the valve, and means for detachably locking the valve to the stem, said means including an actuator extending and movable longitudinally of the stem so as to be accessible adjacent to the free end of the stem.

20. A liquid dispenser including a container having an outlet, a slide valve for controlling the outlet, the valve having a valve portion to control the flow of a gas into the container, a tubular stem for the valve, a telescopic connection for supplying gas to said valve portion through said stem, said telescopic connection having a part thereof connected to the stem, and a spring in said telescopic connection actuating said part to close the valve.

21. A liquid dispenser including a container having an outlet, a slide valve for controlling the outlet, the valve having a valve portion to control the flow of a gas into the container, a tubular stem for the valve, a telescopic connection for supplying gas to said valve portion through said stem, said telescopic connection having a part thereof connected to the stem, said telescopic connection having stop means to limit the movement of said part and thus to limit the opening movement of the valve, the latter being otherwise freely removable from said tube.

22. A liquid dispenser including a container having a slidable outlet tube having a lateral outlet opening, a discardable elastic piston valve for controlling said opening and having a self closing air inlet control portion, a tubular stem detachably connected to the valve, a telescopic connection having a member fixedly connected to the stem, and means for supplying air to the valve through said telescopic connection and said stem.

23. A liquid dispenser including a container, an outlet tube slidable inward and outward of the container through a lower wall portion thereof, a valve means in said outlet tube having portions for controlling the outflow of liquid and the inflow of air through said outlet tube in the outward position of the latter, means detachably connected to said outlet tube in the outward position thereof for feeding air under pressure to said outlet tube, said valve means adapted to serve as a fixed closure for the outlet tube with the latter in the inward position and while the dispenser filled with liquid is being shipped, means for releasably locking the valve means to serve as said closure, and said valve means being removable from the outlet tube and being discardable.

24. A liquid dispenser including a container having a discharge tube with a liquid outlet port, and a movable liquid dispensing valve in said tube for controlling the dispensing of liquid through said tube and the port thereof, said liquid dispensing valve carrying an elastic check valve adapted to automatically open to permit the passage of gaseous fluid through the liquid dispensing valve into the container and to automatically close to prevent the passage of liquid from the container through the liquid dispensing valve.

25. A liquid dispenser including a container, a discharge tube slidable through the wall thereof and provided in its outer end portion with a discharge port, a slide valve in said tube for controlling the dispensing of liquid through said tube and its port, said slide valve carrying an elastic check valve adapted to automatically open to permit the passage of gaseous fluid through the slide valve into the container and to automatically close to prevent the passage of liquid from the container through the slide valve.

26. A liquid dispenser including a container, a discharge tube slidable through the wall thereof and provided with a port intermediate its ends, a slide valve mounted to reciprocate within the tube for the purpose of opening and closing said port, and means supported on the tube for detachably locking the slide valve in port closing position.

27. A liquid dispenser including a container, a discharge tube slidable through the wall thereof and provided with an outlet port, a rubber piston slidable within the tube to open and close said port, a metallic nipple also slidably mounted within the tube and to which nipple the rubber piston is secured, and clutch means formed on said nipple for readily detachable engagement with an appropriate valve operating member.

28. In an assembly of the character described, a hollow rubber piston valve with an integral check valve at one end and open at its other end, and a tubular metal clip coaxial with and having a non-axial connection with the rubber piston valve to maintain the clip and valve in assembled relation, said clip having therethrough an axial conduit registering with the hollow confines of the piston valve to provide for the passage of fluid through both the clip and valve to the check valve of the latter.

29. A single use valve comprising a hollow rubber piston having an integral check valve at one end, and a coaxial metal piston detachably secured to its other end, said metal piston having an air passage therethrough and the rubber piston having an integral elastic check valve adapted to automatically open to permit the passage of gaseous fluid fed thereto through the metal piston and to automatically close to prevent the passage of liquid in a contra direction, and clutch means on said metal piston for readily detachable engagement with an appropriate valve operating member.

30. A single use valve comprising a hollow tubular rubber piston having at one end an annular seat engaging edge and an integral cross axial partition across the interior of the tubular piston and spaced from the opposite ends thereof, said partition having thereon an elastic check valve formed integral with the piston and adapted to automatically open to permit the passage of gaseous fluid through the piston in the direction of said seat engaging edge and to automatically close to prevent the passage of liquid through the piston in a contra direction.

31. A single use valve comprising a hollow tubular rubber piston having at one end an annular seat engaging edge and shaped at its other end for detachably mounting on a valve operating member, and an integral cross axial partition across the tubular piston and intermediate said ends thereof, said partition having thereon an elastic check valve adapted to automatically open to permit the passage of gaseous fluid through the piston in the direction of said seat engaging edge and to automatically close to prevent the passage of liquid through the piston in a contra direction.

32. A dispensing device including a liquid container, and a discharge tube through the wall of the container having a valve for controlling the discharge of liquid therethrough, in combination with a casing for the container, means on the casing for actuating the discharge tube valve, and means for detachably locking the valve actuating means on the casing to the valve in the tube to permit operation of the latter by the former.

33. A dispensing device comprising a container provided with a discharge tube slidable through the wall of the container into projecting position and having therein a valve, means for normally locking the valve to the tube in sealing position, a casing for the container, means supported on the casing for securing the tube, when in projecting position, to the casing, means also supported on the casing for unlocking the valve from the tube, and means also supported on the casing for actuating the valve.

34. A dispensing device including a container provided with a discharge tube having therein a valve, means for normally locking the valve to the tube in sealing position, a casing for the container, a door on said casing, means supported on the door for unlocking the valve from the tube, and means also supported on the door for actuating the valve.

35. A dispensing device including a container provided with a discharge tube having therein a valve, a casing for the container, a door on the casing, and valve operating means mounted on the door including means for detachably locking the valve operating means to the valve.

36. A dispensing device including a container provided with a discharge tube slidable through the wall of the container into projecting position and having therein a valve, means for normally locking the valve to the tube in sealing position, a casing for the container, a door on said casing, means supported on the door for securing the projecting tube thereto, means also supported on the door for unlocking the valve from the tube, and means also supported on the door for actuating the valve.

37. A dispensing device including a container provided with a discharge tube slidable through the wall of the container into projecting position and having therein a valve, a casing for the container, means supported on the casing for securing the projecting tube thereto, and means also supported on the casing and adapted to be detachably secured to the valve for the purpose of actuating the latter.

38. A dispensing device including a container provided with a longitudinally slidable discharge tube having a discharge valve, a casing enclosing the container and provided with an opening through which the tube is adapted to project, means supported on the casing for holding the discharge tube against longitudinal movement, a plunger also supported on the casing for oscillation and reciprocation, an arm rigid with said plunger, and means carried by the arm to secure the valve thereto, whereby reciprocation of the plunger will operate the valve.

39. A dispensing device including a container provided with a discharge tube having therein a slide valve for controlling the discharge of liquid therethrough and having a resilient piston, in combination with a casing for the container, means on the casing for actuating the discharge valve, there being an air passage leading through the valve actuating means on the casing and through the discharge valve through which air may be conducted to the interior of the outlet tube to there be discharged into the liquid in said tube, and means for coupling the valve in the tube to the valve actuating means on the casing with the latter forming an air-tight joint.

40. A dispensing device including a casing adapted to enclose a liquid container having a valved outlet, and valve operating means mounted on the casing and including means for detachably locking the valve operating means to the valve of such container.

41. A dispensing device including a casing adapted to enclose a liquid container having a valved outlet, and valve operating means mounted on the casing and including means for detachably locking the valve operating means to the valve of such container, said valve operating means on the casing being provided with a passage therethrough for conveying air under pressure to the valved outlet of such container.

42. A dispensing device including a casing adapted to enclose a liquid container having a valved outlet, valve operating means mounted on the casing and including means for detachably locking the valve operating means to the valve of such container, said valve operating means on the casing being provided with a passage therethrough for conveying air under pressure to the valved outlet of such container, and means supported on the casing for supplying air under pressure to said passage.

43. A dispensing device including a refrigerator casing adapted to house a container having a valved outlet, valve operating means supported on the casing and including means to detachably lock the valve operating means to the valve of such container, said valve operating means on the casing being provided with a passage therethrough for conveying air under pressure to the valved outlet of such container, means for refrigerating the interior of the casing, and means for withdrawing refrigerated air from the interior of the casing and placing the same under pressure and feeding it to said passage of the valve operating means.

44. A dispensing device including a refrigerator casing adapted to house a container having a valved outlet, valve operating means supported on the casing and including means to detachably lock the valve operating means to the valve of such container, said valve operating means on the casing being provided with a passage therethrough for conveying air under pressure to the valved outlet of such container, means for refrigerating the interior of the casing, and means for withdrawing refrigerated air from the interior of the casing and placing the same under pressure and feeding it intermittently to said passage of the valve operating means.

45. A milk dispenser comprising a cabinet, a milk can in said cabinet having an air outlet in the upper part thereof and above the level of the milk therein, a walled duct leading through the wall of the can in the lower portion thereof and below the liquid level in the can, an air refrigerating unit and associated air pump coupled to said duct to cool air and feed it through the duct into the lower portion of the can to agitate the milk contained in the can and escape through said outlet into the confines of the cabinet, said refrigerating unit and pump being arranged to take air from the confines of the cabinet, recool the same and recirculate it through said duct and can.

46. A milk dispenser comprising a cabinet adapted to detachably receive a milk can, a milk can detachably seated in the cabinet and provided in the lower portion thereof with an air inlet, means mounted on the cabinet for supplying air to the inlet of the can positioned therein, and means for detachably connecting the air inlet of the can to the air supply means on the cabinet.

47. A milk dispenser comprising a cabinet adapted to detachably receive a milk can, a milk can detachably seated in the cabinet and provided in the lower portion thereof with an air inlet having a check valve to permit the passage of air into the can but to preclude retrograde flow of liquid through the check valve, means mounted on the cabinet for supplying air to the inlet of the can positioned therein, and means for detachably connecting the air inlet of the can to the air supply means on the cabinet.

48. A milk dispenser comprising a cabinet adapted to detachably receive a milk shipping can, a milk can detachably seated in said cabinet and provided in the lower portion of the can with an air inlet passage extending through the wall of the can below the normal liquid levels therein, a check valve in said passage to admit air under pressure into the can to agitate the milk in the latter but preclude counter flow of milk through said check valve, said valve constituting an inherent part of the can assembly when the can is shipped full of milk for bodily introduction into the cabinet, means associated with the cabinet for supplying air under pressure to said inlet passage of the can, and means for detachably connecting the air inlet passage of the can in the cabinet with said air supply means of the cabinet.

WILLIAM TAMMINGA.