W. W. PRICKETT.

WEIR.

APPLICATION FILED JAN. 5, 1920.

1,359,915. **Patented Nov. 23, 1920.**

Fig. 1.

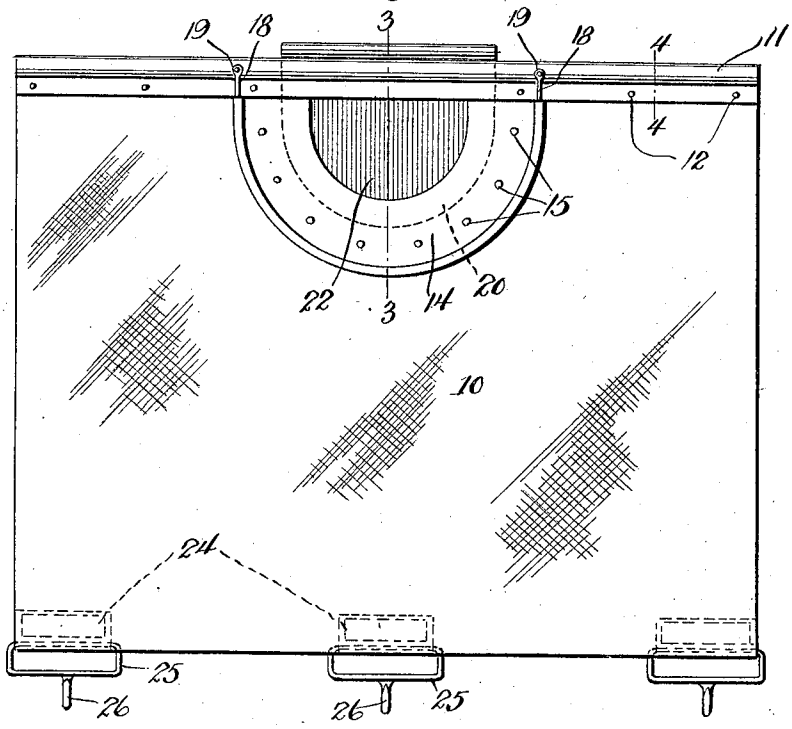

Fig. 2.

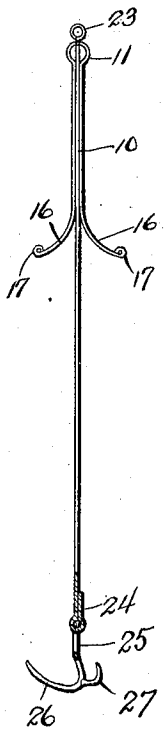

Fig. 3.

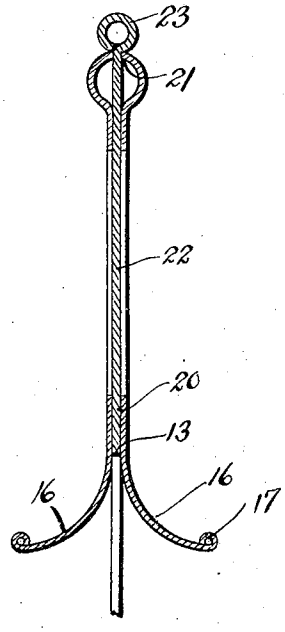

Fig. 4.

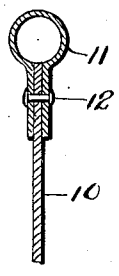

Fig. 5.

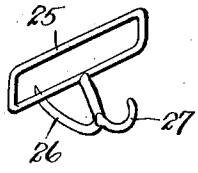

Inventor

Wilber W. Prickett

By J. Reaney Kelly, Attorney

UNITED STATES PATENT OFFICE.

WILBER W. PRICKETT, OF JEROME, IDAHO.

WEIR.

1,359,915. Specification of Letters Patent. Patented Nov. 23, 1920.

Application filed January 5, 1920. Serial No. 349,543.

To all whom it may concern:

Be it known that I, WILBER W. PRICKETT, a citizen of the United States, residing at Jerome, in the county of Jerome and State of Idaho, have invented certain new and useful Improvements in Weirs, of which the following is a specification.

The present invention relates to and contemplates improvements in weirs such as are used for the purpose of temporarily damming irrigation ditches and the like.

The invention further contemplates the provision of a weir which may be cheaply constructed, quickly and easily placed in position in a ditch or removed therefrom when occasion requires, and one which may be conveniently carried from place to place.

The invention has for a further object the provision of an improved weir which has means for accurately measuring the flow of water through the regulating gate thereof.

Various other objects and advantages of my invention will become apparent during the continuance of the following description.

In the drawings:—

Figure 1 is a view in front elevation showing an embodiment of my invention in its preferred form.

Fig. 2 is a view in side elevation.

Fig. 3 is a view in cross section (vertical) taken on line 3—3 of Fig. 1.

Fig. 4 is a view in cross section taken on line 4—4 of Fig. 2.

Fig. 5 is a view in perspective of means to secure the lower end of the weir within the ditch.

In its preferred form my invention consists of a body portion 10 which may be of a heavy canvas material and whose dimensions may be varied as circumstances may require. The upper edge of the body 10 is received by substantially rigid carrying member 11 and firmly secured in position as shown at 12. In order to reduce weight and at the same time simplify the construction of the weir the member 11 may be formed by bending a flat piece of heavy galvanized iron into the form shown in cross section of Fig. 4 so that the edge portions lie opposite one another and thereby provide for securely retaining the upper edge of the body 10.

The body portion 10 is cut away as at 13, adjacent to carrying member 11 in order to provide an opening through which the water may pass. Suitable means for closing this opening are provided and will be hereinafter fully described. Reinforcing members 14 are positioned on each side of the body member 10 and have their inner edges overlying the edge of the cut away portion 13 as clearly shown in Fig. 3; the reinforcing members being secured together and to the body member 10 as at 15.

While the reinforcing members 14 are secured firmly to the body member 10 I also provide means for supporting the members from the carrying member 11 and toward this end the lower edges of the members 14 are turned outwardly as at 16 and rolled or beaded to provide a sleeve or channel 17 through which the carrying wires 18 pass. The free ends of the carrying wires may now be secured to studs 19 on the carrying member 11 which arrangement provides for the secure retainment of the reinforcing members 14. By turning the lower edges of the reinforcing members 14 outwardly the members are materially strengthened. It will also be noted that by reason of the flared part of the reinforcing members, the canvas about the members is not likely to become torn or worn as would be the case if there was no curvature and the lower edges of the reinforcing members were secured flush upon the canvas.

As pointed out above a portion of the reinforcing members 14 overlies the edge of the cutaway portion 13 of the body 10 thus forming a channel 20. A slot 21 is formed in the carrying member 11 above the channel 20 for the reception of a gate member 22, the lower edge of the gate fitting snugly within the channel 20. Should the gate member 22 be constructed of sheet metal as it is in the preferred embodiment of my invention, the upper edge thereof may be rolled to form a handle portion 23 whereby it may be easily manipulated.

At its lower end the body 10 is provided with securing flaps 24 for carrying suitable means to secure the weir to the bottom of the ditch. These means may be in the form of hooks as shown in the drawings but it is pointed out that this construction may be varied should circumstances so require.

In their preferred embodiment the securing means above referred to consists of a body portion 25 which may be conveniently secured to the body member 10 by means of flaps 24, and a ground engaging portion or

hook 26 of suitable dimensions. The ground engaging portion 26 is in turn provided with a handle 27 which provides for easy manipulation.

In actual practice the weir is secured within the ditch by means of the ground engaging portions 26 and if necessary a few shovels full of dirt may be placed along the lower edges of the body 10. The gate 22 being movable allows for the regulation of the flow of water. When not in use it will be seen that the weir can be rolled up into a compact bundle and conveniently carried or stored.

It is also pointed out that means may be used to measure the flow of water through the gate opening.

Having thus fully described my invention what I claim as new and desire to secure by Letters Patent is:—

1. In a device of the character described, a body portion, said body portion provided with an opening, a carrying member secured to said body portion, reinforcing members secured upon each side of said body portion and projecting beyond the edges of said body portion into said opening, and a gate member slidably mounted in said carrying member adapted to close said opening and seat between the projecting portions of said reinforcing members substantially as and for the purpose set forth and described.

2. In a device of the character described, a weir comprising a flexible body portion, anchoring means carried by said body portion, a carrying member secured to said body portion, said carrying member being provided with a slot intermediate its ends, said body portion provided with an opening, reinforcing members secured to said body portion adjacent to said opening and having their inner edges projecting beyond the edges of said opening, and a gate member projecting through said slot and having its lower edges seated between the projecting portions of said reinforcing members to close said opening, substantially as described.

In testimony whereof I affix my signature.

WILBER W. PRICKETT.