Feb. 27, 1940. R. K. HOPKINS **2,191,479**

MANUFACTURE OF ALLOY INGOTS

Filed Feb. 23, 1939 2 Sheets-Sheet 1

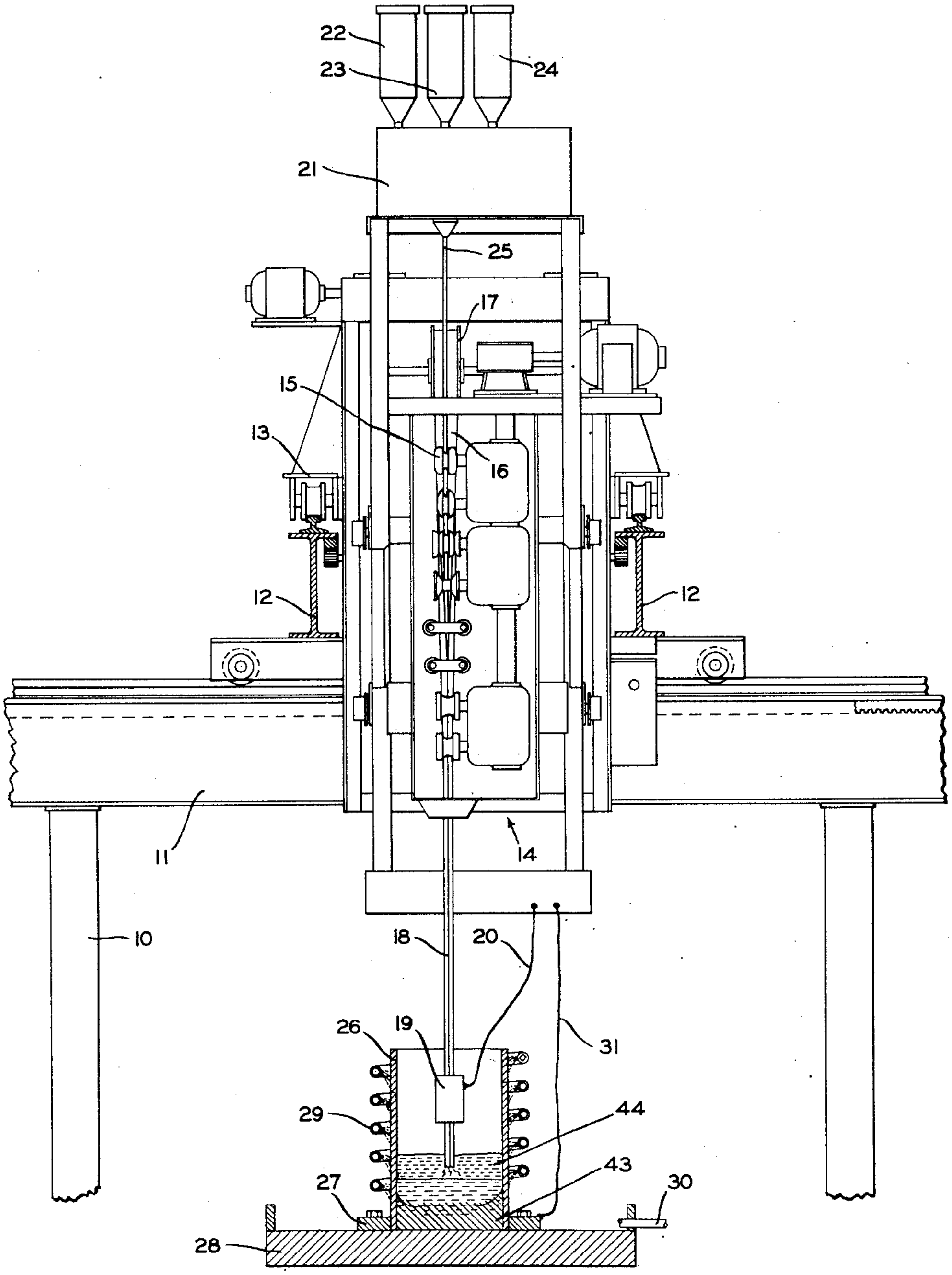

FIG. I

INVENTOR
ROBERT K. HOPKINS
BY Virgil F. Davico
ATTORNEY

Feb. 27, 1940. R. K. HOPKINS **2,191,479**

MANUFACTURE OF ALLOY INGOTS

Filed Feb. 23, 1939 2 Sheets-Sheet 2

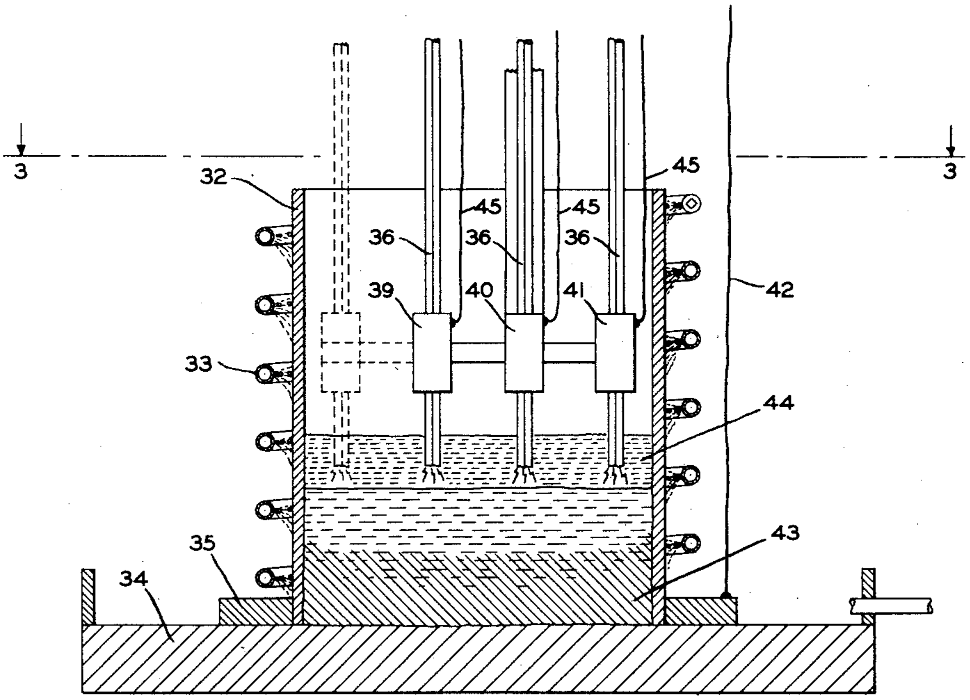

FIG. 2

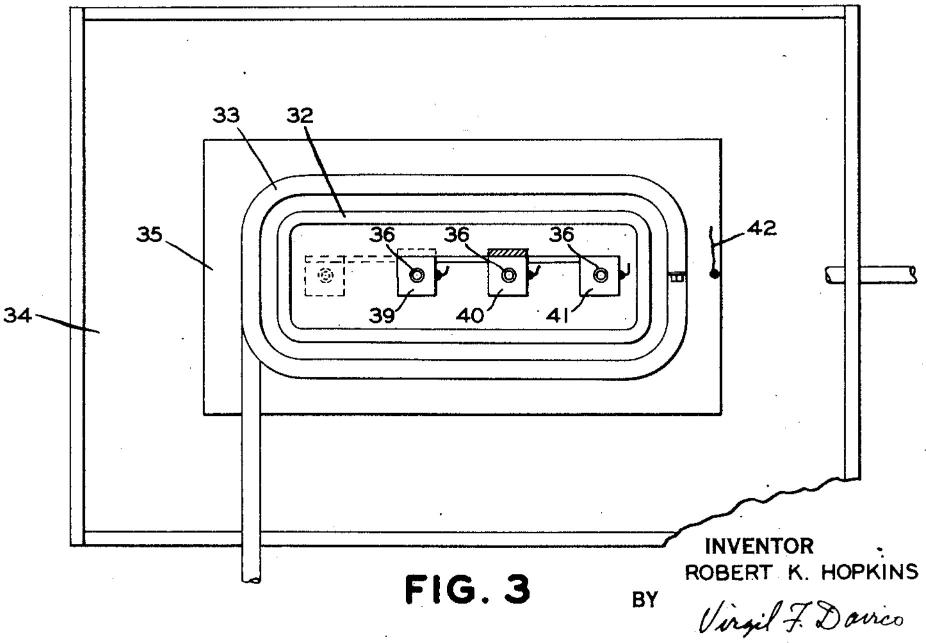

FIG. 3

INVENTOR
ROBERT K. HOPKINS

BY Virgil F. Davico
ATTORNEY

UNITED STATES PATENT OFFICE

2,191,479

MANUFACTURE OF ALLOY INGOTS

Robert K. Hopkins, West New Brighton, Staten Island, N. Y., assignor to M. W. Kellogg Co., New York, N. Y., a corporation of Delaware

Application February 23, 1939, Serial No. 257,886

8 Claims. (Cl. 75—10)

This invention relates to a method and apparatus for efficiently and economically making consistently uniform semifinished alloy products, such as slabs and billets, from raw materials in a single continuous operation, and in such manner that these products will be substantially free from external and internal defects, and in such condition that they may be readily fabricated into final products of various kinds. This application is a continuation in part of my application Serial No. 187,104, filed January 27, 1938.

One of the principal objects of my invention is to provide a method and means for the formation of such semi-finished products continuously in a mold and solidifying them therein while being formed, and in and by which the forming operation can be accurately controlled in all its various phases, and further to prevent any deleterious substances entering into the semi-finished products without the loss of any of the constituents used in making them.

A further object is to provide such control for my method and apparatus as to enable the production of semi-finished products having a wide range of analysis.

The use of my invention eliminates the many serious difficulties heretofore experienced and losses suffered in making alloy ingots and converting them into final products.

The above as well as the further objects and advantages of the invention, will be better appreciated from a consideration of the following description of preferred modes of carrying it out in practice taken with the accompanying drawings, in which

Fig. 1 is a front view, partly in section, of apparatus used in carrying out in practice the novel method of the invention.

Fig. 2 is a fragmentary front sectional view illustrating the deposition of alloy metal in an elongated mold, and

Fig. 3 is a sectional view taken on lines **3—3** of Fig. 2.

The invention is of general application and may be successfully employed in the production of both ferrous and non-ferrous alloys. The novel method is especially applicable to the production of ferrous alloys, particularly those containing comparatively large proportions of alloying elements such as chromium, nickel, manganese, vanadium, silicon, tungsten, molybdenum, columbium, either alone or in combination. Of the latter class of alloys, the corrosion resistant alloys, such as the chrome steels and the chrome-nickel steels, are particularly suited for production by the novel method.

In practicing the invention, the constituents of the alloy, in comparatively inexpensive and readily available commercial forms, are fed, in the proportions required to give the desired analysis, to a mold in which they are fused, by an electric current discharge that is submerged beneath a blanket of protective flux, to form the alloy of desired analysis. The submerged electric current discharge generates heat at extremely high temperatures so that conditions are ideal for the complete intermingling of the constituents into homogeneous metal and the refinement thereof to a high degree in a very short interval of time. Since the flux envelops the electric discharge it too is subjected to the extremely high temperature heat and is fused and heated to very high temperatures thereby, in actual practice temperature readings taken at the surface of the molten flux have ranged from 3000° F. to over 4000° F. The temperature of the molten metal beneath the flux exceeds the flux temperature by probably from 200° F., to 500° F., or more.

The highly heated molten blanket, which extends across the full cross-section of the mold, conducts high temperature heat throughout the cross-section of the mold with the result that the commingling and refining effect of the electric current discharge is prolonged and the formed alloy reaches the mold sides in a highly heated and extremely fluid condition, in which condition it will conform to the contour of the mold and produce an alloy body of highly satisfactory surface characteristics. In the condition stated of the fused metal and fused flux, impurities readily pass from the metal to and will be taken up by the flux so that extremely clean metal results.

The heat generated by the electric current discharge passes from the flux and the deposited alloy to the mold and out from it. Since the alloy forming is a continuous operation, as opposed to a batch operation, heat loss takes place before the total heat necessary for the operation is supplied. Consequently, cooling and solidification of prior deposited alloy takes place simultaneously with the deposition of subsequently deposited alloy. This results in a progressive filling of the mold as well as in a progressive solidification of the deposited alloy from the bottom of the mold upward.

Impurities or extraneous material rejected by the alloy during crystallization easily pass through the highly fluid supernatant alloy and are absorbed in the flux and eliminate defects in the product. By reason of the highly fluid supernatant alloy, piping and porous formations are eliminated.

By adjustment of the rate at which heat is supplied and the rate at which heat is removed from the mold, the depth of molten alloy in the mold as well as the rapidity of solidification and crystallization of the alloy may be controlled within wide limits. With corrosion resistant alloys, such as the chrome-steels and the chrome-nickel steels, rapid solidification is highly desirable as it results in a refined crystal structure which can be broken down by working operations without failure much in the same manner as carbon steel. In actual practice, by rapid solidification eighteen (18%) per cent chromium, eight (8%) per cent nickel steel billets have been produced in which the coarse dendridic crystal structure characteristic of cast 18—8 was practically eliminated. These billets showed an extremely fine grain structure extending inwardly a considerable distance from the skin. The fine grain zone provides an envelope which safely withstands the working forces without rupture. Copper molds were used which were cooled by sprays of water played on their sides and the stools upon which the molds were supported, the water being sprayed at a rate to allow from one to four inches of deposited alloy to remain molten after the operation had attained equilibrium. This range of depth of molten metal is generally satisfactory for the production of highly refined homogeneous alloy of uniform analysis throughout. When less rapid cooling rates are desired, steel or cast iron, ceramic, or other molds may be used, these latter may be water cooled, if this is necessary, to give the desired results. In choosing the mold material, it should be of such character that it does not combine with the deposited alloy. Thus, in the production of low carbon corrosion resistant alloys the use of materials, such as cast iron, should be avoided because of the possibility of carbon pick-up.

The flux blanket should be of such character and deep enough to submerge the electric current discharge and cover the cross-section of the mold so as to effectively exclude the atmosphere. Flux blankets of from one to three inches in thickness have given satisfactory results. Thicker blankets will function satisfactory but their use is not generally economical since electrical energy is wasted in fusing the excess flux.

The flux employed should be one that will not add to or remove substantial quantities of constituents from the deposited alloy. However, it should be such that it will readily flux out impurities. Certain silicates have been found to be satisfactory fluxes. The silicates of calcium, magnesium, and manganese, either alone or in combination, and with or without additions of Al_2O_3 and TiO_2 have been used successfully. In the production of corrosion resistant alloys a non-oxidizing calcium silicate flux, containing a sufficient proportion of calcium di-silicate to render it self-disintegrating and a small proportion of calcium carbide to render it slightly reducing, has been found satisfactory. Fluxing material may, if desired, be continuously, or intermittently, added during operation to maintain equilibrium in the flux blanket and the alloy.

The raw materials are generally readily available and relatively cheap articles of commerce that are made up entirely of the constituents of the desired alloy. Thus, in the production of ferrous alloys, the preferred raw materials will be steel or iron and the ferro-alloys, such as ferro-chrome, and ferro-manganese, that contain high percentages of the alloy element. When the alloy element itself is commercially available at a comparatively low cost, as in the case of nickel, it may be used. Low price scrap alloy material has sometimes been satisfactorily employed to supply a large proportion of the constituents, the remainder of the constituents required having been supplied from ferro-alloys.

The alloy producing operation is carried out in such a manner that there is substantially no addition or removal of constituents by extraneous factors. The analyses of the alloys produced depend solely on the constituents used and the rate at which they are supplied to the electric current discharge. While many ways may be devised for passing the raw materials at more or less constant rates through the flux blanket to the arc, I have found in actual practice that a satisfactory way is to form one of the raw materials, the steel, iron, or alloy scrap, into a hollow electrode from whose end the electric current is discharged and pass the other raw materials in particle form through the hollow electrode to the electric discharge. When the raw materials used make it possible all of them may be formed into solid electrodes; also, one or more solid electrodes may be used in combination with hollow electrodes. The use of one or more hollow electrodes, through which some of the raw materials are passed, alone or in combination with one or more solid electrodes, is a simple expedient for accurately securing constant rates of feed for each of the raw materials, which may be varied over wide ranges at will. Constant feed of the raw material, or materials, supplied in electrode form is obtained by maintaining the characteristics of the discharge constant; constant feed of the raw materials supplied in particle form through the hollow electrode, or electrodes, is obtained by metering them at a constant rate, or rates. A change of rate of feed of the raw materials supplied in electrode form is obtained by changing the characteristics of the discharge, thus, by reducing the amperage, the rate of feed is reduced and by increasing, the rate of feed is increased. The rate of feed of the raw materials in particle form may be changed by changing the metering rate. Thus, an alloy of predetermined analysis may be continuously produced or alloys of different analysis may be successively produced with the same set of raw materials.

One form of apparatus for carrying out my method includes a structural support **10** provided with horizontal I-beams **11** upon which a bridge **12** is mounted for movement (Fig. 1). A truck **13** is mounted on bridge members **12** for movement along their length. Thus, truck **13** may be moved in any horizontal direction. An electrode forming and feeding mechanism **14** is supported on truck **13** and is movable vertically, manually or by motor operated means, relative to truck **13**. The mechanism **14** includes a plurality of rollers **15** which are adapted to form a flat strip **16**, supplied from a coil **17**, also supported on truck **13**, into a hollow electrode **18** of substantially closed contour. Rollers **15** are driven by a variable speed motor which is arc controlled as is common in the electric furnace art, to form and feed electrode **18** as required to maintain an electric discharge of constant characteristics from its end. By this control electrode **18** may be fed at any predetermined rate and the rate may be changed at will by merely changing the amperage setting of the electric current supply.

Electrode 18 passes through a contact device 19 which is supported from mechanism 14. A cable 20 connects a device 19 to one side of the electric current supply.

A housing 21 is supported above coil 17 and in it are positioned a plurality of metering devices, six are included in this apparatus. Each of the metering devices is arranged to receive granular material from a hopper, such as hoppers 22, 23 and 24, and feed it at a constant, but adjustable, rate to tube 25 that leads from housing 21 through rollers 15 into electrode 18. By this construction constituents of the desired alloys in particle form may be supplied to the electric curent discharge through electrode 18 at constant rates which may be varied at will.

Electrode 18 feeds into a mold 26, which may be of various materials, such as steel, cast iron and ceramic, but which in the production of corrosion resistant alloys such as chrome steels and chrome-nickel steels, where rapid cooling is desired and where it is important to avoid carbon pick-up, it may be made of copper of comparatively small thickness. Mold 26, of the desired cross-section, is provided at its bottom end with a flange 27. Mold 26 is held in position on stool 28 by bolts that pass through flange 27. Mold 26 is surrounded by pipe coil 29 through which water is passed. Coil 29 is perforated at spaced intervals so that the water may spray against the sides of mold 26. The water passes from the sides of mold 26 to the top of stool 28 from whence it passes through an outlet pipe 30. A cable 31 connects mold 26 to the other side of the electric current supply.

The rates of feed per unit of time for each of the raw materials may be easily ascertained as there is substantially no loss or gain of constituents in the operation. Thus, in the production of 18% chromium, 8% nickel, 1% manganese alloy with 0.04% maximum carbon content, it will be well to supply per unit of time 18 weight units of chromium, 8 weight units of nickel, 1 weight unit of manganese and 73 weight units of iron. Commercial ferro-chrome containing 70% chromium and having a carbon content of 0.06% is a comparatively cheap material and is used as the raw material for the chromium; 25.75 weight units of this material will supply 18 weight units of chromium as well as 7.75 weight units of iron and 0.0156 weight unit of carbon. Commercial ferro-manganese containing 80% manganese and having 0.10% carbon is a satisfactory raw material for the manganese. 1.25 weight units of this material will supply a 1 weight unit of manganese and in addition, 0.25 weight unit of iron and 0.0014 weight unit of carbon. The nickel may be supplied by using commercial nickel shot containing 0.10% carbon. 8 weight units of the nickel shot will supply the required nickel and 0.008 unit of carbon. The iron may be cheaply supplied by using low carbon irons, such as the readily available Armco iron, or by using low carbon steels. Armco iron may be obtained containing 0.02% carbon maximum and can be purchased in strip form. 65 weight units of such Armco iron will supply the remainder of the iron and 0.0130 weight unit of carbon.

In actual practice using the proportions and materials just stated, the alloy obtained had an analysis which did not depart from the predetermined analysis of 18% chromium, 8% nickel, 1% manganese and 0.038% carbon by more than a usual experimental error. Furthermore, the losses in this process are negligible.

By the use of low carbon ferro-chrome, i. e., the variety containing 0.03% carbon, the carbon content of the 18—8 alloy stated above can easily be dropped to about 0.03% carbon. The carbon content may also be further reduced to the neighborhood of 0.02% by using carbon free nickel.

With the same ingredients given above and by changing the rates of feed, the whole series of corrosion resistant chrome-nickel steels may be produced.

The rates of feed in production of the chrome-steels are also readily ascertainable. Thus, if it is desired to produce 12%–14% chrome, 1% manganese steel, with a maximum carbon content of 0.05%, the Armco iron strip, the 0.06% carbon ferro-chrome and the ferro-manganese may be the raw materials. This analysis, fixing on 13% chromium, is obtained by feeding, per unit of time, 18.57 weight units of ferro-chrome, 1.25 weight units of ferro-manganese and 80.18 weight units of the Armco iron. The resulting alloy contains somewhat less than 0.3% carbon. Again, the whole series of chrome steels may be produced by merely changing the rates of feed of the raw materials. As before, lower carbon contents may be obtained by using the 0.03% carbon grade of ferro-chrome.

High speed tungsten tool steel, high silicon electrical steel, and any other special alloy steel can be economically produced by this process.

I have found that the rate of deposition of the alloy is a function of the amperage of the electric current and varies almost in direct proportion thereto. While employing a strip 1/16 of an inch thick that formed into a hollow electrode of 1 inch in diameter, I have deposited from 150 pounds to 200 pounds of 18—8 alloy per hour with a discharge of 2300 amperes; with the same electrode from 250–325 pounds per hour were deposited when the amperage was raised to 3700.

Within limits, the voltage of the discharge is of importance, and in general, the temperature of the operation, as indicated at the molten flux surface, increases substantially directly with the voltage. There are variations in the quality and properties of an alloy of given analysis when produced at different temperatures. In general, there is an optimum temperature, or optimum temperature range, for the production of each analysis. The optimum temperature, or optimum temperature range, can in each case be determined by trial and once obtained can be duplicated by merely adjusting the voltage of the electrical discharge. With 18—8 alloy, a voltage of about 40 volts gives good results, when ease of operation and quality of metal are balanced. At 40 volts, with water cooling of a copper mold, the flux surface temperature ranged from 3200° F. to 4000° F.

After the rates of feed and the voltage and amperages have been established, the metering devices and arc control arrangements are adjusted to feed their respective materials at the chosen rates. A plug 43 of alloy of the analysis of the alloy to be produced is then placed in the bottom of mold 26. The plug should be thick enough to prevent fusing through to the mold stool 28. Electrode 18 is then lowered until it approaches the surface of the plug and a wad of steel wool or similar arc starter interposed between its end and the surface of the plug. A flux blanket of from 1 to 3 inches is then placed in the mold to completely cover the bottom thereof. The supply of water to coil 29 is then opened, the electrical circuit closed and the metering devices set into operation.

The initial surge of current fuses the arc starter and, thus, provides an ionized path through which the electric current discharges. The heat of the discharge fuses metal of the electrode, the material supplied through the electrode and metal of the plug into a molten pool. The heat of the discharge is of extreme intensity so that the metal fused is brought to an extremely fluid condition, in which condition its constituents quickly intermingle to form an alloy of uniform analysis.

The heat of the discharge also fuses the flux blanket and imparts to it an extremely high temperature. The highly heated flux not only excludes the atmosphere but maintains the high temperature of the surface metal of the deposited alloy so that it can flow in its highly fluid condition to the mold sides to conform to the contour of the mold with a surface remarkably free from folds, holes, cracks, segregations and other of the usual imperfections of cast metal. The highly heated flux, furthermore, makes it possible to prolong the intermingling and refining action of the high temperature discharge and, thus, further assures uniform metal of exceptional character. In addition, the highly heated flux makes it possible for impurities to be easily and quickly released from the molten metal and rapidly absorbed.

In the initial phase of the operation, since heat is used in melting the flux, it is sometimes advisable to maintain a water spray sufficient to prevent heating of the mold excessively. After the flux is molten the spray is increased to the ultimate required to maintain the cooling rate desired and an equilibrium between heat added and heat removed. With alloys that solidify with a coarse grain, especially the austenitic chrome-nickel steels, rapid solidification is highly desirable as with rapid crystallization the characteristic dendridic structure is reduced to a minimum. In practice, I have found that highly satisfactory results are obtained by cooling at such a rate that a depth of molten metal ranging from one to four inches overlies the solidified metal. This method of cooling produces small sized equiaxed grains which are very desirable for subsequent working operations.

The removal of heat by the water spray from the bottom and sides of the mold at the rates stated, assures a continuous, upward solidification of the alloy while there is always highly heated metal above it which can move to compensate for shrinkage and thus prevent the usual porous areas, holes, pipes, etc. of the prior practice. The highly fluid supernatant metal, furthermore, prevents segregation of impurities as those that are thrown out of solution during crystallization can readily pass through it to be absorbed by the flux.

When the mold is filled to the desired extent, the metering devices are stopped and the electric current opened but the spraying of the water may be continued until all of the alloy is solidified. After solidification of the alloy body, mold 26 may be separated from stool 28 and removed. The alloy body may be easily taken from mold 26. Mold 26 may be then placed on stool 28 and the production of another alloy body commenced.

The operation may be used not only in the production of billets but to form semi-finished alloy articles of any of the usual forms. Thus, in Figs. 2 and 3 is shown a mold 32 shaped to form a rectangular slab. As before, the mold may be cooled by water sprays from perforated coil 33. Mold 32 is of a highly conductive metal such as copper and is held on its stool 34 by bolts passing through flange 35. With molds of this shape a plurality of electrodes 36 are preferably used. The electrodes may all be hollow as is electrode 18 of Fig. 1, or one or more may be solid, or all may be solid, the raw materials being supplied at constant rates by and through the electrodes. Electrodes 36 may be fed by arrangements carried on truck 14 and will contact the current through contact devices 39, 40 and 41 which are connected through cables 45 to the same or separate current supply, or supplies. The other side of the current supply, or supplies, will be grounded to the mold through cable 42. Electrodes 36 are preferably oscillatable as indicated by the arrows in the drawings, through the positions indicated, to assure an even temperature over the whole surface of the deposited metal. The operation for producing the alloy body is initiated and carried out in the same manner as described in connection with Fig. 1.

The billet molds 26 and the slab molds 32 may be of any size and length. Thus, semi-finished alloy bodies of the usual sizes are easily produced, and when required bodies weighing as little as only a few pounds may be produced.

The alloy bodies, whether billets, slabs, etc., after they have been removed from their molds, because of their substantially imperfection free surfaces, because of their small crystal structure, and because of the strong outer fine grain envelope, may be worked directly in the manner well known in the art, to final or further intermediate products with great facility. Thus cogging and the difficulties, losses and expenses attendant thereto are eliminated. While some trimming may be required, the finished article will be free from defects chargeable to the production of the original semi-finished alloy body.

I also claim that the alloy product disclosed herein made by my method and apparatus is my invention.

I claim:

1. The method of producing alloy in the form of semi-finished bodies, comparable to worked slabs or billets, directly from raw materials, which comprises, supplying the raw materials into a metal mold through a blanket of flux in the proportions required by the desired analysis, fusing and superheating all of the materials as they are supplied by subjecting them to electric current discharged through a gap beneath the surface of the flux to form the desired alloy, the flux also being fused and super-heated by the discharge, whereby a substantial depth of the fused metal beneath the flux is maintained in a highly super-heated condition and the gap is maintained completely submerged in fluid flux, and continuously cooling the mold to solidify prior formed increments of the alloy during the formation of subsequent increments and to prevent fusing of the alloy to the mold, the cooling rate being adjusted to maintain the temperature of the surface of the fused flux within a predetermined range and to maintain a predetermined depth of molten alloy below the fused flux.

2. The method of producing alloy in the form of semi-finished bodies, comparable to worked slabs or billets, directly from raw materials made up entirely of the constituents of the desired alloy, which comprises, supplying the raw mate-

rials into a metal mold through a blanket of flux in the proportions required by the desired analysis, fusing and super-heating all of the materials as they are supplied by subjecting them to electric current discharged through a gap beneath the surface of the flux to form the desired alloy, the flux also being fused and super-heated by the discharge, whereby a substantial depth of the fused metal beneath the flux is maintained in a highly super-heated condition and the gap is maintained completely submerged in fluid flux, continuously cooling the mold to solidify prior produced increments of the alloy progressively upwards during the production of subsequent increments and to prevent the produced alloy fusing to the mold, and adjusting the voltage of the discharge to establish the temperature of the top surface of the fused flux within a predetermined range.

3. The method of producing alloy bodies directly from raw materials made up solely of the constituents of the alloy, which comprises supplying the raw materials into a metal mold through a blanket of flux in the proportions required to produce the desired alloy, fusing and highly superheating all of the materials as they are supplied by subjecting them to electric current discharged through a gap beneath the surface of the flux whereby said materials rapidly intermingle to produce the desired alloy, the flux being also fused and superheated by the electric current discharge to maintain the gap completely submerged in fluid flux, continuously cooling the mold to solidify prior produced increments of the alloy progressively upwards during the production of subsequent increments and to prevent the alloy fusing to the mold, and adjusting the voltage of the electric current discharge and the rate of cooling of the mold to maintain the surface of the flux at a temperature ranging between 3000° F. and 5000° F.

4. The method of producing dense, homogeneous alloy bodies, characterized by their freedom from casting defects, directly from raw materials, which comprises supplying the raw materials into a mold, fusing all of said materials together in said mold as they are supplied to produce the alloy, the fusion of said materials and the production of the alloy taking place under the influence of the high temperature heat generated by the discharge of electric current through a gap maintained completely submerged in fluid flux, and dissipating heat from said mold at a rate to progressively solidify the produced alloy from the bottom of the mold upwards during the filling of the mold and to prevent fusion of the produced alloy to the mold.

5. The method of producing alloy bodies that are characterized by their dense, homogeneous structure, their freedom from casting defects and their uniformity of analysis, directly from raw materials, which comprises supplying the raw materials from separate sources of supply into a mold beneath the surface of a protective blanket of fusible flux, discharging electric current through a gap maintained completely submerged in fluid flux to fuse all of said materials as they are introduced into the mold and to convert them into the desired alloy under the influence of the high temperature heat of the electric current discharge, regulably controlling the feed of each of the respective raw materials to supply them to the gap in such proportions that the alloy produced is of the desired analysis, cooling the mold to progressively solidify the alloy produced into the desired alloy body from the bottom of the mold upwards during the filling of the mold, and removing the solidified alloy body from the mold.

6. The method of producing alloy bodies that are characterized by their dense, homogeneous structure, their freedom from casting defects and their uniformity of analysis, directly from raw materials, which comprises, supplying the raw materials from separate sources of supply in the proportion required to produce the desired alloy into a metal mold of high heat conductivity beneath the surface of a protective blanket of fusible flux, fusing and highly superheating all of the materials as supplied to produce the desired alloy by subjecting them to electric current discharged through a gap completely submerged in fluid flux, one of said raw materials being supplied in the form of a hollow electrode from the end of which electric current is discharged, the other materials being supplied in particle form through the hollow electrode, continuously cooling the mold to prevent the alloy from fusing thereto and to solidify prior produced increments of the alloy during the production of subsequent increments whereby the desired solid alloy body is produced progressively from the bottom of the mold upwards during the filling of the mold, and removing the solidified alloy body from the mold.

7. The method of producing alloy bodies that are characterized by their dense, homogeneous structure, their freedom from casting defects and their uniformity of analysis, directly from raw materials made up of the constituents of the alloy, which comprises, supplying the raw materials from separate sources of supply into a metal mold of high heat conductivity beneath the surface of a protective blanket of fusible flux, one of said raw materials being supplied in the form of a fusible electrode, discharging electric current from the end of the electrode through a gap completely submerged in fluid flux to fuse all of the raw materials together as supplied to form and to refine the alloy, controlling the feed of the electrode and the characteristics of the electric current discharged from its end to maintain the discharge end of the electrode beneath the surface of the blanket of flux and the rate of fusion of the electrode at a predetermined value, controlling the feed of the remainder of the raw materials, the last mentioned feed and the feed of the electrode being effected simultaneously to supply the raw materials in the proportions required to produce the desired alloy, continuously cooling the mold to prevent the alloy from fusing thereto and to solidify prior produced increments of the alloy during the production of subsequent increments whereby the desired solid alloy body is produced progressively from the bottom of the mold upwards during the filling of the mold, and removing the solidified alloy body from the mold.

8. The method of producing alloy bodies in a semi-finished condition that are characterized by their dense and homogeneous structure, their freedom from casting defects and their uniformity of analysis, directly from raw materials made up of the constituents of the alloy, which comprises mounting a metallic mold of high heat conductivity upon a support, providing a conductive surface in the bottom of the mold, covering said surface with a protective blanket of fusible flux, forming one of the raw materials into a hollow electrode and feeding the formed electrode into the mold through the blanket of

flux, supplying the remainder of the raw materials into the mold beneath the surface of the blanket of flux through the hollow electrode, discharging electric current through a gap between the end of the hollow electrode and said conductive surface to fuse all of the raw materials together as they are supplied to form the alloy in the mold, controlling the feed of the electrode and the characteristics of the electric current discharged from its end to maintain the discharge end of the electrode completely submerged in fluid flux as the formed alloy rises in the mold and to maintain the rate of fusion of the electrode at a predetermined value, controlling the feed of the materials supplied through the hollow electrode, the last mentioned feed and the feed of the electrode being effected simultaneously to supply the raw materials in the proportions required to produce an alloy of desired analysis, continuously cooling the mold to prevent the alloy from fusing thereto and to solidify prior produced increments of the alloy during the production of subsequent increments whereby the desired alloy body is produced progressively from the bottom of the mold upwards during the filling of the mold, and adjusting the voltage of the electric discharge and the cooling of the mold to maintain the temperature of the surface of the molten metal within a selected range.

ROBERT K. HOPKINS.

CERTIFICATE OF CORRECTION.

Patent No. 2,191,479.

February 27, 1940.

ROBERT K. HOPKINS.

It is hereby certified that error appears in the printed specification of the above numbered patent requiring correction as follows: Page 2, first column, line 51, for the word "satisfactory" read --satisfactorily--; page 3, first column, line 5, for "a device 19" read --device 19--; and second column, line 24, for "0.3%" read --0.03%--; and that the said Letters Patent should be read with this correction therein that the same may conform to the record of the case in the Patent Office.

Signed and sealed this 25th day of June, A. D. 1940.

(Seal)

Henry Van Arsdale,
Acting Commissioner of Patents.

CERTIFICATE OF CORRECTION.

Patent No. 2,191,479. February 27, 1940.

ROBERT K. HOPKINS.

It is hereby certified that error appears in the printed specification of the above numbered patent requiring correction as follows: Page 2, first column, line 51, for the word "satisfactory" read --satisfactorily--; page 3, first column, line 5, for "a device 19" read --device 19--; and second column, line 24, for "0.3%" read --0.03%--; and that the said Letters Patent should be read with this correction therein that the same may conform to the record of the case in the Patent Office.

Signed and sealed this 25th day of June, A. D. 1940.

(Seal)

Henry Van Arsdale,
Acting Commissioner of Patents.