Nov. 24, 1964 G. E. SCHACHER 3,158,852

APPARATUS AND PROCEDURE FOR SENSING PASSAGE OF MOVING THREAD OR THE LIKE

Filed Aug. 23, 1960

FIG. 1

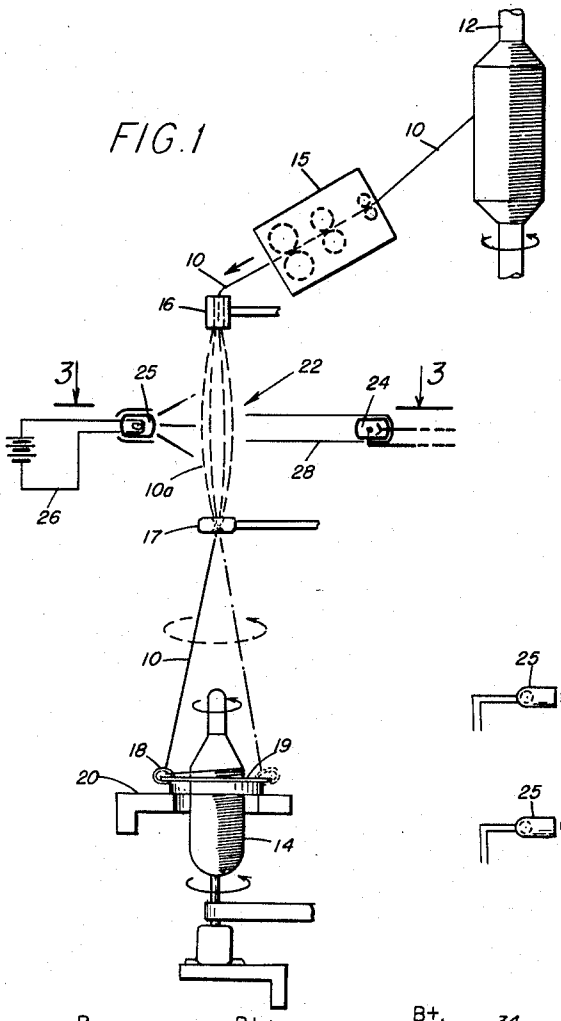

FIG. 2

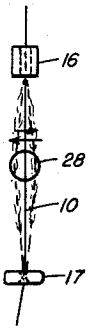

FIG. 4

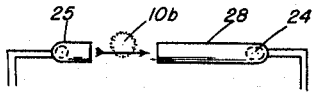

FIG. 3

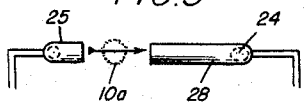

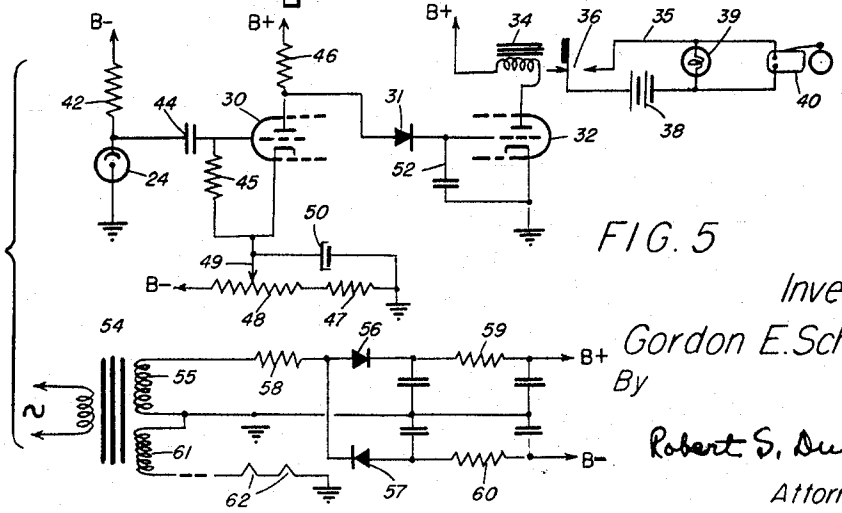

FIG. 5

Inventor

Gordon E. Schacher

By

Robert S. Dunham

Attorney

United States Patent Office 3,158,852 Patented Nov. 24, 1964

3,158,852

APPARATUS AND PROCEDURE FOR SENSING PASSAGE OF MOVING THREAD OR THE LIKE

Gordon E. Schacher, New Brunswick, N.J.
(7 Via Ventura, Monterey, Calif.)

Filed Aug. 23, 1960, Ser. No. 51,374
8 Claims. (Cl. 340—259)

This invention relates to apparatus and procedure for detecting passage of a moving article, and more particularly for sensing the presence or absence of a thread, filament or the like which is passing continuously through a given region. In a more specific sense the invention is concerned with detecting interruption in the passage of thread in textile apparatus, as where such thread is continuously advanced for winding or for spinning or for use in knitting or other operations.

For convenience, the term thread is used herein to include generically similar filamentous material such as yarn, roving and other fibrous strands such as synthetic filaments or bundles of such filaments. In a more general sense, unless limited to textile thread as just described (which includes sewing thread) the term is intended to include other filamentous articles such as wire, cord, string, twine, strands for cordage, and the like.

In one particular embodiment of the invention, it is associated with yarn-spinning machinery, where, for example, a continuous thread-like article is drawn from one or more supply bobbins, such article being specifically one or more so-called rovings, and where the roving is then continuously wound on a receiving bobbin, as yarn, the winding operation including a twisting action for imparting the desired twist to constitute the fibrous material as yarn. In spinning machines of this sort, the roving or yarn continuously travels through a space between the supply bobbin or spool and the receiving bobbin. Ordinarily the machine comprises a large multitude of assemblies of the character described, thus simultaneously producing a corresponding number of bobbins of spun yarn.

One problem in the operation of such machinery, is the need to watch carefully for the occurrence of breaks in any of the many moving threads, so that appropriately prompt attention can be given to mending the break or otherwise correcting the malfunction of the given unit of the apparatus. To maintain desirable efficiency in the use of such equipment it has therefore been necessary for an attendant or operator to inspect the machine almost all the time. This is a difficult task, especially where the machine or group of machines may involve as many as hundreds of spinning units, each with its individual yarn or roving to be watched.

A similar problem occurs in knitting machines, where yarn continuously travels from a supply bobbin or spool, through the intervening space, to the knitting mechanism itself. Indeed here, the problem is particularly acute because the knitting machine must immediately be stopped, i.e. when the yarn fails by breakage or other occurrence. So far as I am aware, no effective way has heretofore been found to detect interruptions of thread passage in apparatus of these types, other than electromechanical devices, which by their nature must physically touch the thread and can therefore cause breakages. This trouble is especially acute with threads that are being spun and thus are very weak.

For brevity of reference herein, the term textile machine is adopted as a generic designation for equipment of this sort, i.e. including spinning and yarn-handling machines as used in producing yarn. Thus the various types of machines used in spinning natural fibrous materials, as well as apparatus for producing, spinning, winding or otherwise treating various similar filamentous

bodies, of which instances are synthetic filaments and bundles of filaments of any composition whatever, ranging from rayon to glass, are intended by the term textile apparatus. Such term likewise includes knitting, weaving, sewing, braiding, and like machines, where threads are continuously transported and there is need to detect any interruption in the passing thread.

Principal objects of the invention are therefore to provide novel methods and apparatus for sensing the occurrence of the passing yarn or the like and for providing a signal, as for indication or control purposes, when the thread is broken or otherwise fails to follow its desired course in the operation of the equipment. Further objects are to afford new photoelectric means for detecting interruption in thread passage and for establishing signals representing any breakage or other stoppage of the passing thread, or alternatively providing a signal when the operation is continuing as desired.

Additional objects are to provide new means and methods for photoelectric detection of passing objects, particularly objects undergoing oscillation or vibration.

In various types of textile equipment or the like, as exemplified by spinning and knitting machines, the yarn travels from one locality to another, through an intervening space, in such fashion that it is continuously in vibration. Thus in spinning equipment, the roving is brought down from the supply spools, through a suitable eye or guide and then to the winding and spinning structure, conventionally involving a traveler following a circular path around a collecting bobbin so that as the yarn is wound on the rotating bobbin, it traces a conical surface defined by the circular path, such action affording the desired twist in the yarn. By virtue of this oscillating movement, the yarn above the eye is set in vibration, e.g. of a circular or cylindrical type, which may be readily seen, or which indeed may be so minute as to be difficultly perceptible.

In accordance with the present invention, photoelectric means are disposed adjacent the path of the yarn where it undergoes the last-mentioned vibration, together with appropriate illumination, in such relation that the light received by the photoelectric means has a periodic or oscillating character, for example being interrupted or reduced in an oscillating manner by the vibrations of the yarn. By an appropriate circuit, a pulsating voltage is thus delivered by the photoelectric element and the detecting circuits of the invention further include means deriving an alternating current signal from such voltage. This signal, which has a frequency corresponding to the vibration of the yarn, is then detected as by appropriate rectifying means, to control the output circuit in accordance with the presence or absence of the A.C. signal. Suitably relay or other means in such output circuit are consequently arranged to yield a significant signal, e.g. upon failure of the thread. Such signal may involve a visible or audible indication, as by a light or bell, or may be arranged for control or recording purposes.

Thus in the case of a spinning machine, the described instrumentalities are organized to afford a visible or audible signal upon breakage of the yarn and absence of the pulsating output of the photocell. The operator is then warned to locate and repair the broken thread. In other types of textile machinery, similar signals may be employed, or preferably in the case of a knitting machine, the output signal representative of thread breakage, may be directed to stop the machine, as by suitable control of the circuit for energizing a driving motor.

The response to the condition of the passing thread is positive and reliable, and is unaffected by considerable changes in the intensity of the light source or in ambient illumination or in power supplied to the photocell or in its characteristics, or the like. Whereas attempts to detect

the presence or absence of a thread by direct measurement of the D.C. output of a phototube have been essentially unsuccessful, largely because the light-modifying effect of the thread, with respect to the total quantity of light, is so slight and is so easily masked by variable factors as just outlined, the present system is unusually satisfactory. As will now be appreciated, the voltage output of the photocell circuit is essentially modulated or rendered pulsating, by the vibration of the thread. This pulsating or oscillating component of the electrical output is separated or converted as an alternating current signal, which thus is detectably present or is absent, in direct and necessary response to the condition of the thread alone. Hence the signaling function of the system is completely positive and is not confused by other factors.

The invention may be further explained by reference to the accompanying drawing, wherein:

FIG. 1 is a somewhat schematic view, in elevation, of the related parts of one unit of a spinning machine, in combination with the optical parts of the present invention, as illustrating one embodiment of the latter;

FIG. 2 is a diagrammatic elevation of the vibrating thread region in FIG. 1, taken as seen from the left-hand side of FIG. 1;

FIG. 3 is a fragmentary plan view of the optical elements as seen on line 3—3 of FIG. 1;

FIG. 4 is a view similar to FIG. 3, with a slightly different relation of the elements to the passing thread; and

FIG. 5 is a diagram of one form of electrical circuit constituted in the invention, as in combination with the structure of FIG. 1.

For purposes of illustration, the drawing shows the invention as related to spinning apparatus, where one or more strands of cotton roving 10 are withdrawn from a spool or bobbin 12 and eventually twisted and rewound on a bobbin 14, it being understood that in some cases two or more strands of roving are combined to constitute a single thread or yarn cluster 10, i.e. from a corresponding number of bobbins 12, or from a large number of threads on one bobbin (or card).

As dragrammatically shown, the roving may pass through a conventional draft section or unit 15, where drawing rollers attenuate the fibrous thread. From the draft section the thread 10, now attenuated as desired for yarn, traverses, first, a tubular guide 16, which may also impart a twist to the yarn, and then at a lower locality, a further guide element 17, e.g. in the nature of an eye or eyelet of glazed ceramic. The thread then follows a path conventional for the spinning and rewinding action, for example as in passing through a so-called traveler 18, which is freely movable around the circular periphery of a ring guide 19 carried by a ring rail 20 that is appropriately displaced in a vertical direction for winding the yarn on the bobbin 14. The ring guide 19 surrounds the vertical bobbin which is continuously rotated at a high speed. As the yarn is thus wound upon the bobbin 14, the arrangement illustrated drags the traveler around the ring, i.e. so that the yarn 10 (being the attenuated roving) is twisted into the desired yarn formation.

It will be understood that modified or other structures for the spinning operation can be employed as may be desired, for example as with respect to arrangement of guides, twisting and winding elements, and so forth. The essential features of the assembly are that the yarn at one end of its path is given an oscillatory or equivalent motion, so that in an appropriate part of the path it exhibits a detectable vibration, usually in the nature of a trace of a surface of revolution, e.g. as seen in the central locality 22 where the thread passes between the guides 16 and 17. Although in this instance the vibration is transmitted from the lower motion of the thread in a cone-shaped path, other situations or configurations of vibratory motion of the thread may be utilized, even including upper portions of the cone-shaped oscillation pursued by the yarn in its twisting and winding action.

In spinning operations of this sort where a single machine may have a great many units of the sort illustrated in FIG. 1 for correspondingly simultaneous production of a large number of bobbins of finished yarn 14, it is important to ascertain promptly the occurrence of a broken yarn (i.e. roving) in any of the units, or any stoppage of the yarn travel or any premature or unexpected termination of the length of yarn. To such ends, the invention includes a photoelectric cell 24 disposed at one side of the region 22 of thread travel, and a source of light such as a small incandescent bulb 25 at the opposite side of the region 22, the lamp having an appropriate energizing circuit 26. Suitable collimation is also included, as by means of the collimating tube 28 which surrounds the photocell 24 and extends a considerable distance into proximity with the vibrating thread 10*a* at the region 22. Thus to a considerable extent, the light reaching the photocell 24 is restricted to that which originates in the source 25, although the nature of the system, and its selectivity of response to the pulsating or alternating signal are such that a high degree of exclusion of external light is usually unnecessary.

Although as indicated above, the difference in light transmission which would be occasioned by the presence or absence of a stationary thread would be easily masked by other changes in light or by variable factors in the photocell or its circuit, or would be confused with the results of such changes, the vibrating character of the thread 10*a* provides a highly distinctive modification of the light received by the photocell. Specifically it is found that the electrical output of the latter then includes a pulsating or alternating component, corresponding to the frequency of vibration, which is readily detectable apart from the electrical effect simultaneously represented by more or less constant (or at least non-oscillatory) impingement of light. If desired, the center line about which the thread vibrates may be displaced partly sidewise of the central axis of the collimated light path between the source and the photocell, as indicated in FIG. 4, at 10*b*. This arrangement insures that there is an oscillating variation in the total light received by the photocell 24 from the source 25, while the thread is vibrating. It is found, however, that good results are also obtained where the central, vertical line of the vibrating thread intersects the central axis of the collimated light path and is thus disposed in alignment with the center of the photocell; although theory might suggest that in a perfectly symmetrical relation, there would be no reduction in light because of vibration of the thread, it appears that by reason of the nature of the light source, the characteristics of the photocell electrode structure and other necessary inexactness of mechanical arrangement, such theoretical result does not occur, but there is always sufficient inherent asymmetry of light-blocking or photocell response as to impose oscillations in the electrical effect of the cell.

Although other circuits, including arrangements using transistors or other types of electrical amplifying or translating means, may be employed, FIG. 5 shows an example of a simple electronic system for handling the electrical output of the cell and for translating the corresponding alternating electrical signal representative of thread vibration, into a desired output response, e.g. so as to afford a working signal when the thread breaks and its vibration disappears. Described generally, in the system of FIG. 5, the alternating component of the phototube 24 is amplified as an alternating current signal by the tube 30. The amplified A.C. voltage delivered by the last-mentioned vacuum tube is rectified by the rectifier 31, which feeds a D.C. amplifier constituted by the vacuum tube 32. Thus the alternating current signal representative of vibration of the thread 10*a* becomes a D.C. signal in the plate circuit of the tube 32, energizing

a suitable translating device such as the relay **34**. The relay may be arranged to control a final output circuit **35**, i.e. by closure of relay contacts **36** upon deenergization of the relay, so that a working electrical signal is produced in the circuit **35** when the A.C. signal from the photocell disappears because the vibrating thread **10***a* is broken or has stopped vibrating. For simplicity of illustration, the circuit **35** is shown as including a source of current **38** and one or more signaling or other translating or control devices such as a signal lamp **39** and a bell **40**. Hence the arrangement is such that when the thread **10** breaks, so that there is no vibrating element affecting the light to the photocell and correspondingly modulating the photocell output, a visible signal, or an audible signal, or both, will be given immediately.

As already described, the illustrated apparatus, and the method involved in operating it in the stated manner, provide a highly reliable watch or monitoring of the condition of the thread **10** in the spinning or like machine. As long as the thread supply lasts, and there is no breakage and the spinning operation around and upon the bobbin **14** continues as desired, the alternating current signal from the photocell will persist. In consequence, for example, the output circuit **35** is kept open. Should the thread **10** break, at any point in its course, there will be an immediate cessation of vibration af the region **22**, so that there will no longer be a vibrating thread condition affecting the light to the cell **24**. In consequence, the alternating electrical signal disappears, whereupon a working signal is automatically produced in the circuit **35**, with consequent establishment of a visible or audible warning, which persists so long as the thread breakage or other malfunction has not been corrected. The machine attendant is thus promptly notified that a spinning unit is in trouble, and he can readily find it and correct the difficulty. Indeed it will be apparent that each of a large number of spinning units in the machine may be accompanied with photoelectric means and circuits controlled thereby as in FIGS. 1 and 5, to actuate a single warning device (light, bell or the like) upon thread breakage at any one of the units. It is ordinarily not difficult to find the non-functioning unit under such circumstances, yet the system avoids the tedious and time-consuming task of constant watch over the units to learn of the fact of a breakage at any place. It is also possible to have a warning signal at each spinning to eliminate searching the entire machine for the defective unit.

It will be readily apparent that the system is essentially foolproof and highly reliable. For example if the intensity of illumination from the light source or exciter lamp **25** should change, there is no danger of improper response, since the translating circuits are controlled only in accordance with the presence or absence of an alternating component of the photocell output. Non-oscilliatory or non-periodic changes have no effect, nor within a relatively large range, is there any effect because of change in amplitude of the A.C. signal. In other words, the system may be described as automatically adjusted to the intensity of illumination from the lamp **25**, when such intensity changes.

The circuit is similarly free of improper function or lack of desired response, because of other casual changes, e.g. in power supply, phototube characteristics, or the like. At the same time, the apparatus is of a fail-safe character, since any circuit failure will interrupt the A.C. signal and thus establish a working signal just as if the vibrating thread had broken. The operator, finding no broken thread, is thus warned of the malfunction of the circuit. It will also be noted that the system responds to a stoppage of the spinning operation in that any arrest of the thread **10** necessarily brings its vibrating section **10***a* to to rest and the oscillating signal is cut off.

Although, as indicated above, other electronic or similar circuit arrangements may be employed, and although different types of components (including the photocell) may be used in the system illustrated, the following detailed description of a specific circuit is given as a working example.

In the apparatus as constructed, the photoelectric means **24** is a CL2P photoelectric cell, which has a diameter of cross-section approximately ¼ inch, i.e. facing the light source. The collimating tube **28** was accordingly a metal tube having an inside diameter of ¼ inch. The light source **25** is a small tungsten (incandescent) lamp, supplied from a suitable D.C. source, or a 6.3 volt A.C. source. In the circuit of FIG. 5, the circuit of the photocell **24** includes a resistor **42**, of 150,000 ohms, serving for voltage dividing purposes to apply the correct voltage to the photocell from the negative terminal of the corresponding power source. The photocell is coupled through a condenser **44** (0.5 mfd.) to a grid of the triode **30**, the latter being one-half of a dual triode 12AT7. The grid circuit of the tube **30** is completed to the cathode of the tube through resistor **45**, 1 megohm. The plate or anode of the tube section **30** is connected through a plate or load resistor **46** (220,000 ohms) to the positive side of the corresponding power supply. The return of the plate circuit to the cathode extends from ground through a fixed resistor **47** (10,000 ohms) and a further variable resistor **48** (15,000 ohms), by virtue of an adjustable tap **49** on the latter. The ungrounded side of the series resistors **47, 48** extends to the negative power terminal. Thus adjustment of the tap **49** provides a sensitivity control for the circuit, i.e. by adjustment of the potential on the plate of tube **30**, so as to control the grid bias or sensitivity of tube **32**. For by-pass of the alternating current in the path between the tube cathode and ground, a capacitor **50** is connected, i.e. between the tap **49** and ground. This is conveniently an electrolytic condenser of 5 mfd.

It will be understood that the voltage across the phototube **24** constitutes a D.C. component having superimposed thereon a pulsating or alternating component when there is a vibrating article in the path of light to the tube. By virtue of the coupling through the capacitor **44**, only the A.C. component is transmitted to the first amplifier stage, i.e. for application of corresponding alternating potential on the grid of this tube. An amplified A.C. signal is thus delivered at the plate of the tube, such signal being in effect rectified by the crystal diode rectifier **31** (1N70) which constitutes the coupling to the second amplifier stage.

This second stage is provided by the tube **32**, being the other half of the dual triode 12AT7, connected as a D.C. amplifier. Thus the unidirectional voltage is applied from the rectifier **31** to the grid of the tube **32**, with return from the cathode to ground and with alternating components by-passed through the capacitor **52** (0.25 mfd.). The plate of the tube **32** extends through the winding of the relay **34** to the positive side of the power supply. Hence an amplified, continuing A.C. signal at the plate of the tube **30** is received as a D.C. potential by the tube **32**, affording a corresponding flow of plate current through the relay winding **34**, the tube **32** being arranged or adapted for substantial cut-off when there is no signal on the grid. As previously explained, the relay **34** controls the working signal circuit **35**, e.g. in that the latter circuit is in a deenergized condition when the relay is energized, and is modified to an energized condition, by closure of the contacts **36**, when there is no current through the relay.

A power supply of conventional character may be provided, e.g. including a power transfer **54** energized from a commercial A.C. line and having a high voltage secondary **55**. A pair of silicon rectifiers (M–500), **56, 57** are arranged to rectify alternate half cycles of the current from the secondary **55** and connected to deliver current in series (as a voltage doubler) so that the positive and negative power supply terminals are represented as at B+ and B— with a point of inter-

mediate potential (being one side of the secondary 55) connected to ground. The power supply includes a suitable protective resistor 58 (47 ohms) and conventional resistor-capacitor filter networks including resistors 59 (270 ohms) and 60 (22,000 ohms). The transformer also has a separate winding 61 for supplying the heaters 62 of the tube sections 30, 32.

As will now be seen, the effect of a modulated light signal on the photoelectric cell establishes a corresponding alternating electrical signal in the control circuit, such A.C. signal being amplified by the tube section 30, rectified by the crystal diode 31 and converted into an amplified unidirectional current for energization of the relay 34 or similar translating device. Under the control of the relay, an appropriate warning signal, as by the light 39 or bell 40 or other device, is furnished when there is no A.C. signal, thus representing absence of a vibrating thread (or absence of vibration in the thread) at 10*a* in FIG. 1. On the other hand, so long as the spinning apparatus is functioning properly and the thread 10*a* is in vibration, the corresponding signal from the photocell keeps the relay 34 energized and no warning signal is actuated.

Although it will now be appreciated that any of a variety of operations or devices may be controlled in accordance with the presence or absence of the vibrating thread or the like, e.g. to the extent that driving motors may be turned off or other control operation performed as in use of the system with a knitting machine, the illustrated structure affords appropriate example of the basic instrumentalities and of their use.

As indicated, various modifications may be made, and the procedure and system are adaptable for detecting the condition of a passing thread or the like (i.e. any cord-like element) which is under vibration, in a wide variety of equipment and circumstances. Indeed the described instrumentalities are applicable to detection or absence of other articles, i.e. where the article is in vibrating or oscillatory condition, such as to indicate its presence by corresponding modulation or modification of light (as transmitted or reflected to the inspecting photocell). While other modes of illumination may be employed, including arrangements where light from a special or natural source is reflected by the vibrating article, the arrangement shown is of special advantage for sensitivity and reliability. As explained, the photocell is continuously illuminated from the light source, while the effect of the vibrating element is to reduce the illumination in a pulsating or oscillating manner. It will be appreciated that unless otherwise stated, references herein to light and to optical inspection are applicable to radiant energy outside as well as within the visible spectrum, i.e. so far as appropriate for detection in modulated form by a sensing device such as a photocell.

It is to be understood that the invention is not limited to the specific embodiments herein shown and described but may be carried out in other ways without departure from its spirit.

I claim:

1. In apparatus which comprises thread-handling mechanism, the combination, with means for continuously advancing the thread from one locality through an intervening region to another locality, and cyclically moving means engaging said thread at one of said localities and imparting thereto a motion producing continuous vibration of the traveling thread in the aforesaid region, of signal-producing means including photoelectric means disposed to inspect an area occupied by the vibrating thread in said region, for delivering an alternating electrical signal in correspondence with the vibration of the thread, and means controlled by said signal-producing means and selectively responsive to the presence and absence of said alternating signal, to provide a working signal upon cessation of vibration of the thread.

2. In yarn-spinning apparatus which comprises mechanism for continuously advancing yarn being spun from a first locality to a second locality, the combination, with means delivering yarn from a wound body thereof at said first locality, means for winding the yarn on a receiving bobbin at said second locality, means guiding the yarn through a region intermediate said first and second localities, and cyclically moving yarn-engaging means rotatable about the receiving bobbin for twisting the yarn as it is wound thereon by imparting to the yarn a motion producing continuous vibration of the yarn in the aforesaid region, of photoelectric means disposed to inspect an area occupied by the vibrating yarn in said region and adapted to produce an electrical effect and to indicate the presence of vibrating yarn in said region by modification of said electrical effect at a frequency corresponding to the frequency of yarn vibration, circuit means associated with said photoelectric means and responsive to its electrical effect, for producing an alternating current signal in accordance with said modification of said electrical effect at said first-mentioned frequency, and means controlled by said circuit means and including an output circuit, for selectively controlling said output circuit in accordance with the respective presence and absence of said alternating current signal, to provide a working signal of the absence of vibration of the yarn as representing interruption of passage of the yarn through said region.

3. Apparatus as defined in claim 2, in which the photoelectric means is disposed at one side of the region of the vibrating yarn, and which includes a light source disposed on the other side of said region so that light from said source is received by the photoelectric means and is reduced in an oscillating manner by the vibration of the yarn between the source and the photoelectric means.

4. Apparatus as defined in claim 3, wherein the photoelectric means includes a collimating tube therefor, aligned with the area occupied by the vibrating yarn and with the light source, for restricting access of light to the photoelectric means otherwise than from said source.

5. Apparatus as defined in claim 2, wherein the means controlled by said circuit means comprises a relay, arranged to be energized in response to said alternating current signal, and having a pair of contacts which are closed only when the relay is deenergized, and an output circuit connected with said contacts, for establishing said working signal when the contacts are closed.

6. In apparatus which comprises thread-handling mechanism, the combination, with means for continuously advancing the thread from a first locality through an intermediate region to a second locality, and cyclically moving means engaging said thread at one of said localities and imparting thereto a motion producing continuous vibration of the traveling thread in said region, of a light source disposed at one side of said region to direct light through an area occupied by the vibrating thread in said region, photoelectric means disposed at the other side of said region to receive said light and adapted to produce an electrical effect and to respond to periodic modification of said light resulting from the vibration of said thread in said area by modification of said electrical effect at a frequency corresponding to the frequency of thread vibration, circuit means associated with said photoelectric means and responsive to its electrical effect, for producing an alternating current signal in accordance with said modification of said electrical effect at said first-mentioned frequency, and means controlled by said circuit means and selectively responsive to the presence and absence of said alternating signal for producing a positive working signal responsive to the absence of said alternating current signal, representing cessation of vibration of said thread.

7. In apparatus which comprises thread-handling mechanism, the combination, with means for continuously advancing the thread from one locality through an intervening region to another locality, and cyclically moving means engaging said thread at one of said localities and imparting thereto a motion producing continuous vibration of the traveling thread in the aforesaid region, of:

means for illuminating an area occupied by the vibrating thread in said region in such manner that vibration of the thread creates a pulsating light signal; signal-producing means, including photoelectric means disposed to inspect said area to detect said pulsating light signal, for producing an alternating electrical signal responsive only to said pulsating light signal and in correspondence with the vibration of the thread, said signal-producing means being constructed and arranged to cease producing said alternating electrical signal in response only to cessation of said pulsating light signal; and means controlled by said signal-producing means and selectively responsive only to the presence and absence of said alternating electrical signal, to provide a working signal upon cessation of said pulsating light signal.

8. In apparatus which comprises thread-handling mechanism, the combination, with means for continuously advancing the thread from a first locality through an intermediate region to a second locality, and cyclically moving means engaging said thread at one of said localities and imparting thereto a motion producing continuous vibration of the traveling thread in said region, of a light source disposed at one side of said region to direct light through an area occupied by the vibrating thread in said region, photoelectric means disposed at the other side of said region to receive said light and adapted to produce an electrical effect and to respond to periodic modification of said light resulting from the vibration of said thread in said area by modification of said electrical effect at a frequency corresponding to the frequency of thread vibration, said light source and said photoelectric means being disposed to permit completely free vibration of said thread

in all directions transverse of its path through said region, circuit means associated with said photoelectric means and responsive to its electrical effect, for producing an alternating current signal in accordance with said modification of said electrical effect at said first-mentioned frequency, said photoelectric means and said circuit means being constructed and arranged to produce said alternating current signal only in response to said periodic modification of said light, and means controlled by said circuit means and selectively responsive only to the presence and absence of said alternating current signal for producing a positive working signal in response only to the absence of said alternating current signal upon cessation of said periodic modification of said light, representing cessation of vibration of said thread.

References Cited in the file of this patent

UNITED STATES PATENTS

2,200,863	Schuck	May 14, 1940
2,269,340	Gulliksen	Jan. 6, 1942
2,351,229	Potts	June 13, 1944
2,591,977	Strutt et al.	Apr. 8, 1952
2,631,273	Bagno	Mar. 10, 1953
2,728,220	Willner	Dec. 27, 1955
2,744,408	Seney	May 8, 1956
2,892,950	Sadowsky	June 30, 1959
3,043,991	Schneider et al.	July 10, 1962

FOREIGN PATENTS

1,028,155	Germany	Apr. 17, 1958
216,854	Australia	Sept. 2, 1958

UNITED STATES PATENT OFFICE

CERTIFICATE OF CORRECTION

Patent No. 3,158,852 November 24, 1964

Gordon E. Schacher

It is hereby certified that error appears in the above numbered patent requiring correction and that the said Letters Patent should read as corrected below.

Column 2, line 53, for "Suitably" read -- Suitable --; column 6, line 68, for "transfer" read -- transformer --.

Signed and sealed this 5th day of October 1965.

(SEAL)
Attest:

ERNEST W. SWIDER
Attesting Officer

EDWARD J. BRENNER
Commissioner of Patents

UNITED STATES PATENT OFFICE

CERTIFICATE OF CORRECTION

Patent No. 3,158,852 November 24, 1964

Gordon E. Schacher

It is hereby certified that error appears in the above numbered patent requiring correction and that the said Letters Patent should read as corrected below.

Column 2, line 53, for "Suitably" read -- Suitable --; column 6, line 68, for "transfer" read -- transformer --.

Signed and sealed this 5th day of October 1965.

(SEAL)
Attest:

ERNEST W. SWIDER
Attesting Officer

EDWARD J. BRENNER
Commissioner of Patents