B. F. UPHAM.

SHEET PRINTING PRESS.

APPLICATION FILED NOV. 20, 1915. RENEWED NOV. 15, 1916.

1,231,463.

Patented June 26, 1917.

4 SHEETS—SHEET 1.

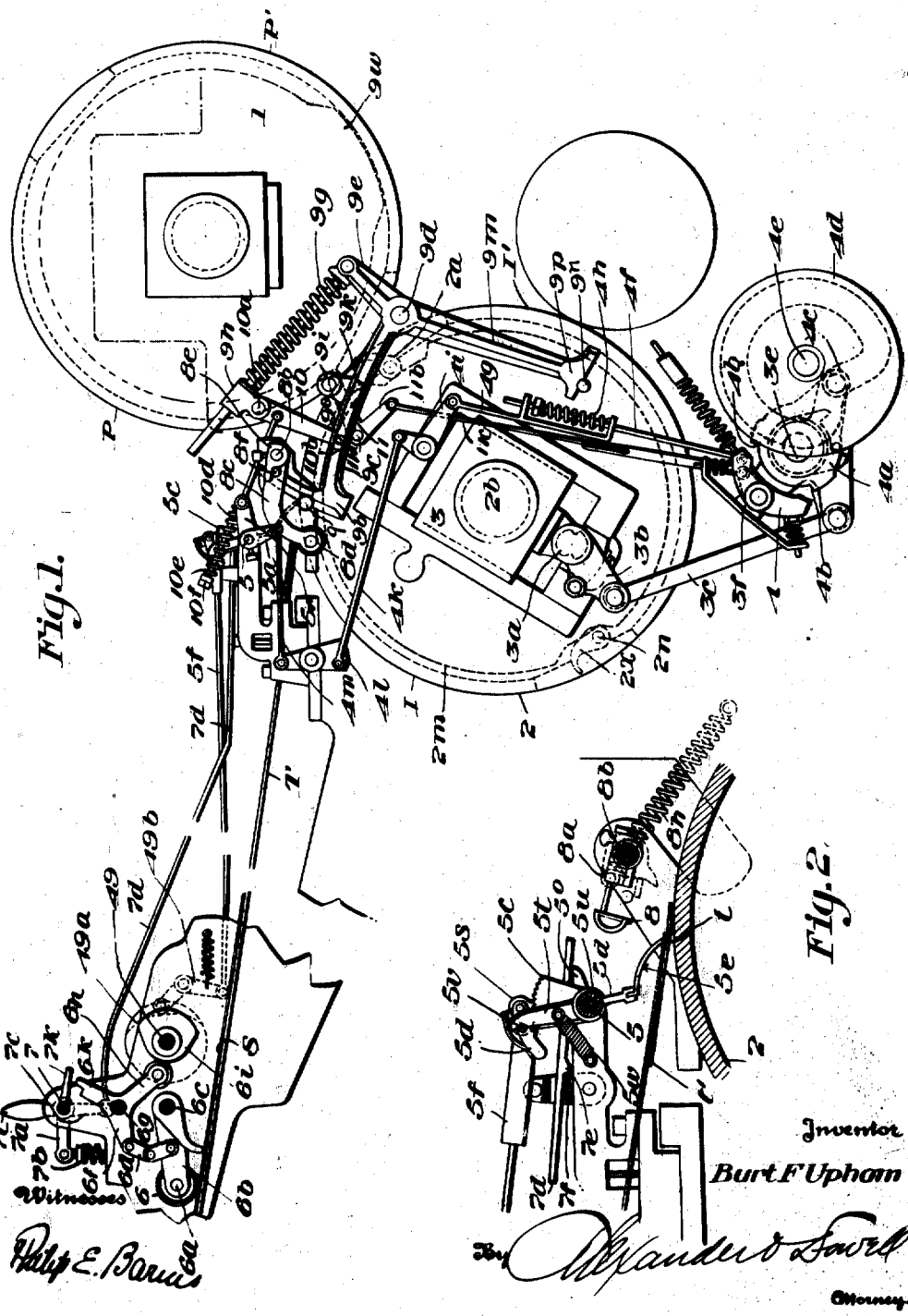

Fig. 1.

Fig. 2.

Witnesses

Philip E. Barnes

Inventor

Burt F. Upham

By Alexander & Sawell

Attorneys

B. F. UPHAM.

SHEET PRINTING PRESS.

APPLICATION FILED NOV. 20, 1915. RENEWED NOV. 15, 1916.

1,231,463.

Patented June 26, 1917.

4 SHEETS—SHEET 2.

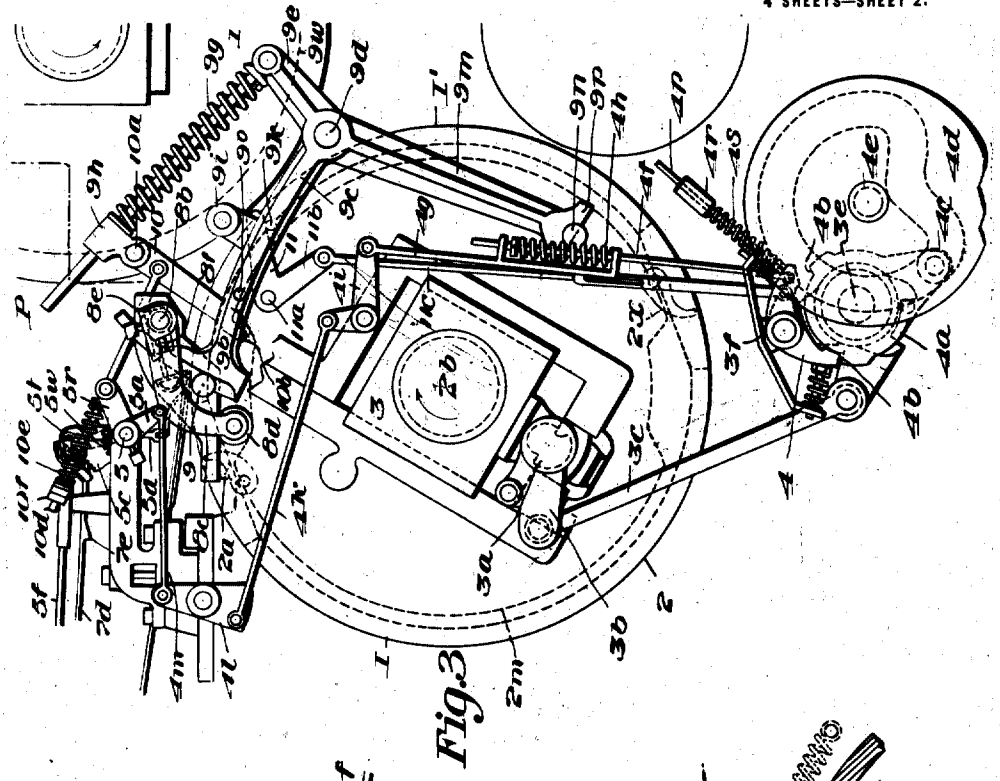

Fig. 3

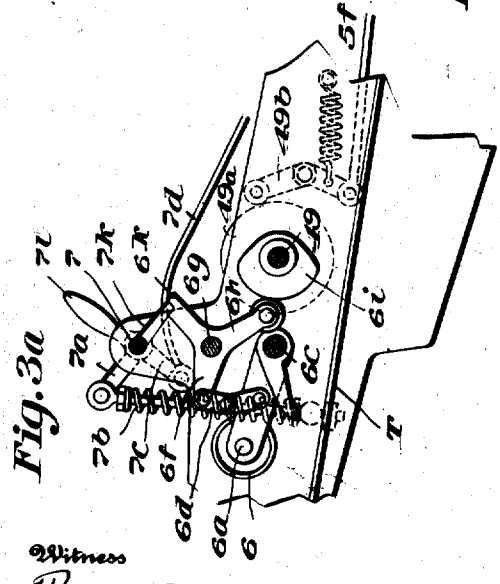

Fig. 3a

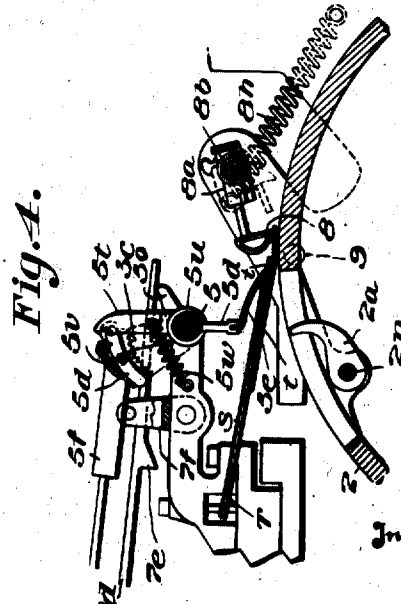

Fig. 4.

Witness

Philip E. Barnes

Inventor

Burt F. Upham

By Alexander & Sawall

Attorneys

B. F. UPHAM.

SHEET PRINTING PRESS.

APPLICATION FILED NOV. 20, 1915. RENEWED NOV. 15, 1916.

1,231,463.

Patented June 26, 1917.

4 SHEETS—SHEET 3.

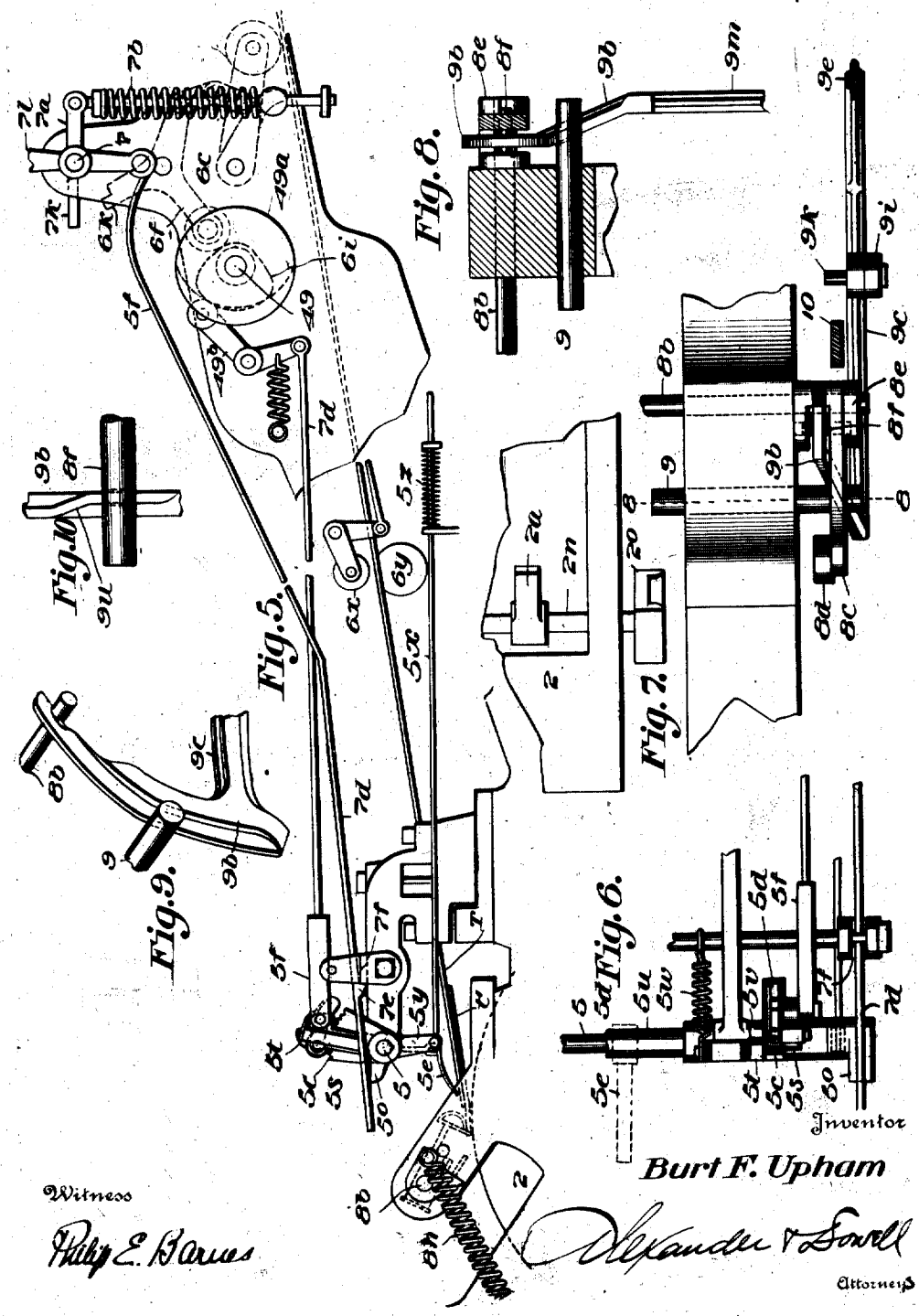

Witness

Philip E. Barnes

Inventor

Burt F. Upham

Alexander & Sawell

Attorneys

B. F. UPHAM.

SHEET PRINTING PRESS.

APPLICATION FILED NOV. 20, 1915. RENEWED NOV. 15, 1916.

1,231,463.

Patented June 26, 1917.

4 SHEETS—SHEET 4.

Fig. 11.

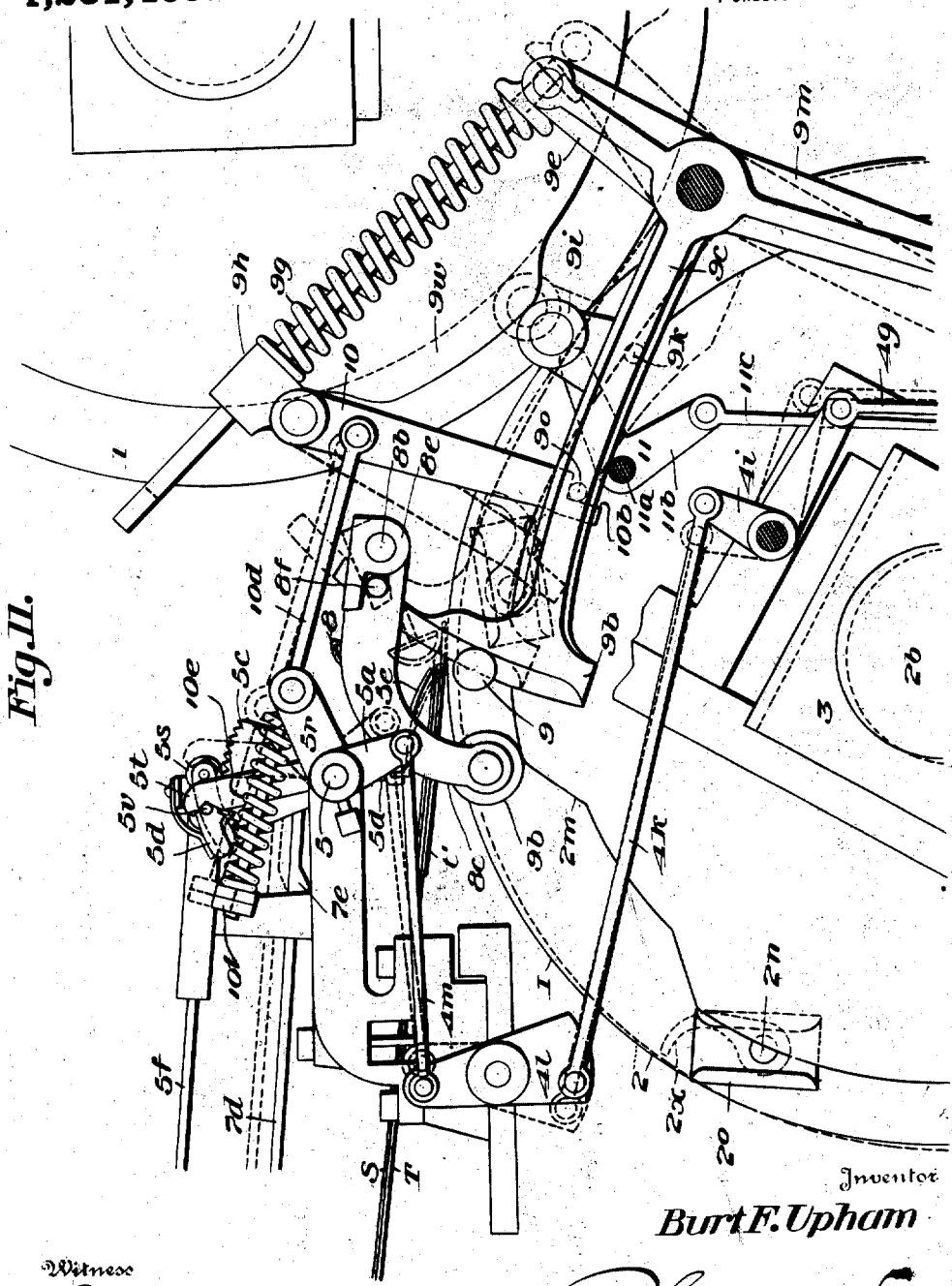

Inventor

Burt F. Upham

Witness

Philip E. Barnes

By Alexander & Sawell

Attorneys

UNITED STATES PATENT OFFICE.

BURT F. UPHAM, OF BOSTON, MASSACHUSETTS, ASSIGNOR TO UNITED PRINTING MACHINERY COMPANY, OF BOSTON, MASSACHUSETTS, A CORPORATION OF MAINE.

SHEET-PRINTING PRESS.

1,231,463. Specification of Letters Patent. Patented June 26, 1917.

Application filed November 20, 1915, Serial No. 62,616. Renewed November 15, 1916. Serial No. 131,571.

To all whom it may concern:

Be it known that I, BURT F. UPHAM, a citizen of the United States, residing at Boston, in the county of Suffolk and State of Massachusetts, have invented certain new and useful Improvements in Sheet-Printing Presses; and I hereby declare that the following is a full, clear, and exact description thereof, reference being had to the accompanying drawings, which form part of this specification.

This invention is an improvement in sheet printing presses, preferably of the type in which rotary impression cylinders are employed, as shown for example in my Patents No. 1,016,659 dated February 6, 1912, and No. 1,087,055, dated Feb. 10, 1914, and the invention has particular reference to presses, such as shown in my said patents, in connection with which automatic sheet feeding devices are employed, such for example as shown in my Patent No. 1,082,374 of Dec. 23, 1913, by which the sheets are automatically fed to the point of seizure by the impression cylinder grippers; and which automatic feeding devices are usually provided with means whereby if a sheet is not fed in time, or is improperly presented or is imperfect, the feeding mechanism may be stopped and the press or cylinder thrown off impression, so as to prevent any offset impression from the type upon the packing of the impression cylinder, or printing of such defective sheet if it passes through the machine.

The object of the present invention is to absolutely insure that a defective or misplaced sheet shall not be taken by the cylinder grippers without stopping either the press or the feeder.

In the preferred form of the invention, as indicated in the accompanying drawings, means are provided whereby if the sheet detectors find a sheet is out of registering position, or is imperfect, the mechanism whereby the devices which forward the sheet from the feeder shall be rendered ineffective so that no other sheet shall be fed forward until the sheet, if merely misplaced, has been properly positioned; or the sheet if imperfect has been removed; also simultaneously the cylinder shall be thrown off impression; also simultaneously the grippers of the cylinder will be prevented from seizing such defective or misplaced sheet, preferably by being rendered ineffective at the seizing point; and also simultaneously if desired the sheet gages are lowered or left in position to prevent the advance of such defective or misplaced sheet onto the cylinder; but each and all of these several precautionary actions occur without stopping the movements of the major heavy portions of the sheet feeding apparatus, or of the major portions of the press.

In the preferred and present practical embodiment of the invention, indicated in the drawings, only the combing rolls of the feeder are thrown out of action when an imperfect or misplaced sheet is detected, and while the impression is thrown off the press continues to run but the cylinder grippers are left open instead of being closed at the seizing point, so they will not take the sheet; and the sheet gages are left down in such position that the defective sheet cannot advance by momentum or jarring; otherwise the heavy parts of the press and feeder continue in operation, so that after the misplaced sheet is properly positioned, or the defective sheet is removed, the operator can by simply tripping a small hand lever cause all the parts to resume their normal operations at full speed, and the sheets are again fed and printed without any waste of time or of power in bringing heavy parts of the press or feeder to a stop; or of starting such heavy parts again; or of speeding them up to full speed, because all the major parts continue to go through their normal movements at full speed; and only such small and light portions of the press and the feeder as actually engage with the sheets are thrown out of effective operation, and most or all of these light parts continue to move but ineffectively.

I will only illustrate and describe so much of a printing mechanism and a related automatic feeding mechanism as will enable others familiar with the art to readily adapt and use the invention, as I do not consider the invention restricted to any particular press or feeder, and it may be usefully adapted for use in connection with various types of presses and automatic sheet feeding mechanisms, but is particularly adapted for

use in connection with rotary sheet presses and feeding of the type shown in my aforesaid patents.

In said drawings:—

Figure 1 is a diagrammatic side elevation of part of a printing press and automatic sheet feeding tripping mechanism embodying my invention and showing parts in normal working position.

Fig. 2 is a detail sectional view of parts shown in Fig. 1.

Figs. 3 and 3^a represent a diagrammatic side elevation, similar to Fig. 1, but somewhat enlarged, and showing the parts in tripped position.

Fig. 4 is a detail sectional view of parts shown in Fig. 3.

Fig. 5 is a detail partly broken elevation of the parts shown in Fig. 1 looking from the opposite side of the press.

Fig. 6 is a detail view of the detector mechanism.

Fig. 7 is an enlarged detail view of the cylinder gripper controlling devices.

Fig. 8 is a sectional view on line 8—8 Fig. 7.

Fig. 9 is a detail view of the gripper pin and gage pin operating devices.

Fig. 10 is an enlarged bottom view of the devices operating the gage controlling pin.

Fig. 11 is an enlarged side elevation of the various tripping devices adjacent the impression cylinder showing the parts in normal operative positions in full lines, and in tripped positions in dotted lines.

In the press indicated in the drawings, the plate cylinder 1, carries two diametrically opposite printing surfaces P, P'; and the impression cylinder 2 has two diametrically opposite impression surfaces I, I', respectively provided with grippers 2^x, 2^x which may take sheets successively from separate feed tables (not shown) and present the sheets to the plates on the cylinder 1, as described in my aforesaid patents. I shall for brevity and clearness simply explain the invention as if the plate cylinder had but one printing surface, and the impression cylinder but one impression surface and one set of grippers, and as if but one feeder was used.

The throw off devices.

In the form of press illustrated in the drawings I prefer to throw the impression on and off by laterally shifting the impression cylinder 2; and for this purpose each trunnion 2^b of such cylinder may be journaled in a slidable box 3 which is supported upon an eccentric 3^a operated by a rocking arm 3^b, which is connected by a link 3^c to a swinging lever 3^d, which is connected to a rock shaft 3^e journaled in the side frames of the press, adjacent the cylinder 2; said rock shaft being connected at the other side of the press to the eccentric in which the other trunnion of cylinder 2 is journaled, so that when shaft 3^e is rocked both ends of cylinder 2 will be similarly and simultaneously moved.

The lever 3^d has two arms, to one of which link 3^c is pivoted, and to the other arm 3^f is pivotally connected a double ended oscillating dog 4, which normally lies in inactive position opposite the notched edge of an oscillating lever 4^a, pivoted on the shaft 3^e and having notches 4^b in its periphery slightly longer than the length of the dog 4. The lever 4^a has a roller 4^c on its end opposite the notch, which roller engages a groove in a cam 4^d mounted on a stud 4^e, which can be driven by any suitable means, and should make one revolution for each impression surface on the impression cylinder; that is in practice lever 4^a should be oscillated once for each operative impression surface on the impression cylinder during the revolution of such cylinder. Motion will not be imparted from lever 4^a to the lever 3^d unless dog 4 is thrown into engagement with notch 4^b.

Said dog 4 is shown as pivotally connected to the lower end of a rod 4^f the other end of which is slidably connected to a rod 4^g, a spring 4^h being arranged in the connection between the rods so as to allow a slight relative movement of said rods. Rod 4^g is connected to one arm of a bell-crank lever 4^j pivoted at its bend on any suitable part of the machine adjacent the bearing of cylinder 2, and the other arm of lever 4^j is pivotally connected by a link 4^k to one arm of an oscillating lever 4^l pivoted on a suitable part of the machine. The other arm of said lever 4^l is connected by a link 4^m to a crank arm 5^a on a rock-shaft 5 above the delivery end of the table T, which shaft is adapted to be rocked by the usual means controlled by the sheet detectors, if a sheet is not fed down on the table at the proper time.

Whenever shaft 5 is rocked motion is imparted to the arm 5^a and from it, through the connections described, to the lever 4^l which in turn pulls rods 4^g and 4^f upward, thereby rocking dog 4 so as to throw one end of the dog into engagement with the notch 4^b of the oscillating lever 4^a, whereupon on the next upward movement of the notch 4^b the lever 3^f is swung upward,—(by reason of engagement of the lever end of dog 4 with notch 4^b in lever 4^a)—and on this upward movement of lever 3^f link 3^c and its connections rock the eccentric 3^a so as to move cylinder 2 away from cylinder 1 and thus "throw off the impression", and the impression will remain "off", until lever 3^f is moved downward again.

The cylinder when thus tripped is intended to remain "off impression" only during that part of its revolution when the sheet which should have been properly fed on

table T would have been printed,—and the cylinder should therefore be thrown "on impression" before another sheet is brought to the printing point. For this purpose the dog 4 is rocked so as to disengage its lower end from notch 4^b and engage its upper end therewith, so that on the return movement of lever 4^a lever 3^f will be returned to original position.

As shown a rod 4^p is pivotally connected to the end of dog 4, and its other end is slidably engaged with a rocking guide 4^r, suitably pivoted to the frame adjacent dog 4; and an expansion spring 4^s is strung on rod 4^p between guide 4^r and the dog 4; said spring is therefore put under compression when lever 3^f is thrown upward; and consequently when the lever 3^f begins to make its return stroke, spring 4^s causes dog 4 to rock and engage its upper end with notch 4^b in lever 4^a, so that upon the return stroke of lever 4^a, lever 3^f is rocked backward and through link 3^c operates eccentric 3^a and throws the cylinder 2 "on impression." If a sheet has meanwhile been properly adjusted on the table T the dog 4 will simply return to normal position and remain out of engagement with lever 4^a, until rod 4^t is pulled upward again; but if a sheet has not been properly adjusted on table T, to be taken by the grippers, shaft 5 will be again rocked at the proper time so as to cause the lower end of dog 4 to again engage notch 4^b of lever 4^a and again throw off impression, in the manner above described, at the proper time. Thus, although the cylinder is "thrown off" impression during the time the sheet which should have been received from table T would be printed, it is "thrown on" impression in time to print any properly fed sheet but will remain "off impression" until a sheet is properly fed.

So far the devices described are or may be constructed to operate substantially as shown in my Patents Nos. 1,087,055 and 1,016,659, aforesaid. The particular construction of such throw-off devices is not claimed herein, and for a more full description of the construction and operation of these throw off devices I refer to my said patents. In the said patents two feed tables are employed, one feeding sheets to the grippers for impression surface I and the other feeding sheets for impression surface I'. As these devices form no part of the present invention it is unnecessary to illustrate or describe both feeders in detail. The second feed table however is provided with devices for automatically tripping the throw off mechanism in case a sheet is not properly fed to the grippers of impression surface I' as described in my said patents.

The sheet feeder and detector.

The automatic sheet feeding devices illustrated in the drawings is of the type illustrated in my Patent No. 1,082,374, dated Dec. 23, 1913. I will briefly describe such portions of this feeder as are relevant to the present invention.

To the shaft 5 is attached a segment 5^c and on the shaft is a loose arm 5^s, beside the segment 5^c, to which arm is connected one end of a rod 5^t that is pivotally connected at its forward end to a pivoted lever 49^b which is oscillated by a cam 49^a attached to a driven shaft 49 (see Patent 1,082,374) by which arm 5^s will be continuously rocked back and forth. To the arm 5^s is pivoted a pawl 5^d which is provided with a pin 5^v on one side adapted to engage a notch in the upper end of an arm 5^t placed beside segment 5^c and fast on a sleeve 5^u loosely surrounding shaft 5. Arm 5^t is normally held against the pin 5^v as by means of a spring 5^w. As arm 5^s is oscillated by link 5^r the pawl 5^d is oscillated back and forth above the segment 5^c but is held out of engagement therewith by pin 5^v engaging arm 5^t because the spring 5^w causes arm 5^t to keep in contact with pin 5^v and hold the pawl raised; and also causes sleeve 5^u to rock with arm 5^s, unless prevented.

To the sleeve 5^u are attached depending arms 5^d to which detector fingers 5^e are attached. Said fingers normally rest upon the sheet of paper S fed forward upon the table T, but if any sheet is imperfect, or is not in position to be taken by the cylinder grippers at the proper time, the end of one or more of the detector fingers 5^e will drop into holes t in the metal plate or strips t' on the end of table T, and will arrest the sleeve and arm 5^t, and prevent the latter arm returning when arm 5^s moves backward, and therefore pin 5^v will disengage arm 5^t, and pawl 5^d will thereupon drop into engagement with segment 5^c and the latter will thereupon be moved with arm 5^s, thereby rocking shaft 5 and causing the trip of the throw-off devices, by means of the arm 5^a on shaft 5 to which is connected the rod 4^m that controls the throw off tripping devices. The pin 5^v can automatically reëngage the notch in arm 5^t as arm 5^s rocks after the detector fingers are reset.

The shaft 5 may be normally held in the position shown in Figs. 1 and 5 and returned to normal position when permitted by any suitable means as shown and described in my Patent 1,082,374 or by other suitable means. I have conveniently shown a rod 5^x pivoted to an arm 5^y on shaft 5 and pressed by a spring 5^z for the purpose.

The sheet of paper S may be fed forward in the usual manner, as by means described in my Patent 1,082,374, until they are arrested by sheet stops or gages 8 in position to be taken by the cylinder grippers (see post).

The combing rollers 6 are mounted upon a suitably driven shaft 6^a journaled in arms 6^b attached to rock shaft 6^c suitably journaled in the side frame of the feeder, and one arm 6^b is connected by links 6^d to one arm 6^f of a compound lever hung on the shaft 6^g. This compound lever has an arm 6^h which may carry a frictional roller engaging a cam 6^i on the driven shaft 49, which is rotated by suitable means, so as to raise and lower the combing rollers at the proper times, so they will advance a sheet to the seizing rollers 6^x, 6^y and toward the cylinder when the feeder is normally operating. The lever 6^f is also provided with an arm 6^k which is adapted to be engaged by a catch 7^k to arrest and hold the combing rolls in ineffective position when the parts are tripped.

As shown in the drawings the catch lever 7^k is attached to a rock shaft 7 journaled in the frame above or adjacent the rock shaft 6^g. Shaft 7 has an arm 7^a which is normally pressed upward by a spring 7^b, see Fig. 3^a. On shaft 7 is an arm 7^c to which is pivotally connected a rod 7^d, the other end of which rod extends through a slotted guide 7^f attached to part of the framing adjacent the shaft 5, (Figs. 2 and 4); and rod 7^d has a tooth 7^e which is adapted to engage the side of the guide 7^f, when the parts are in operative position (Figs. 1 and 2) so as to hold catch 7^k out of position to engage arm 6^k.

On the shaft 5 is a finger 5^o which normally lies underneath the forward end of the rod 7^d. When the parts are in normal position the catch 7^e is engaged with member 7^f, and holds shaft 7 and connected parts in the position shown in Fig. 1 against the tension of the spring 7^b; but when the shaft 5 is actuated, as above described, the finger 5^o disengages shaft 7^e from member 7^f; whereupon spring 7^b rocks shaft 7 and throws the catch 7^k into engagement with arm 6^k, thereby locking the combing rolls in ineffective position (Fig. 3^a) and holding them thus till the operator restores the parts to normal position by rocking the shaft 7 by means of a hand lever 7^l to disengage catch 7^k and tension spring 7^b. As long as the combing rollers are held raised (Fig. 3^a) sheets will not be fed down, so that when a defective or misplaced sheet is detected the next following sheet is stopped and will not be fed down until the defective or misplaced sheet is removed.

The sheet stop gages.

The sheets are fed down against the usual front end sheet gages 8; which are lowered at the proper time to stop the front edge of the sheet in position to be taken by the grippers, and are normally raised out of the way to permit the cylinder grippers to take the sheet. The gages 8 are shown as connected to holders 8^a strung on a rock shaft 8^b, which is normally rocked so as to depress the gages, by means of a spring 8^h (Fig. 4) connected to a crank arm on the end of the shaft and an adjacent stationary part of the frame. In carrying out my present invention if a sheet is misplaced or defective I keep the gages down so that they will prevent such sheet entering between the cylinders. For this purpose on the shaft 8^b (Figs. 1 and 3) is loosely hung an oscillating lever 8^c which carries a roller 8^d on its outer end engaging a cam 2^m connected with the gear on the end of the adjacent impression cylinder 2, or its shaft. A finger 8^e is fixed on the shaft 8^b beside lever 8^c and projects over a pin 8^f slidably mounted in the lever 8^c. This finger 8^f is normally projected so as to engage finger 8^e and cause the shaft 8^b to move upward when the lever 8^c is swung upward by the cam and thus lifts the sheet gage out of the way at the proper time. If however a sheet should be misplaced or defective I provide means whereby this pin 8^f is retracted so that although lever 8^c may rise, the pin 8^f will not engage finger 8^e, and consequently spring 8^h will hold the gages down as indicated in Fig. 4 and thus prevent further forward movement of the sheet. The catch pin 8^f may be operated by any suitable means, but I prefer to operate it by means of the devices which operate the cylinder gripper pins as hereinafter described.

The cylinder gripper trips.

The cylinder grippers 2^a may be mounted on a gripper shaft 2^n provided with a tumbler 2° on one end in the usual manner. A gripper tripping pin 9 is slidably mounted in a fixed portion of the frame adjacent the end of the cylinder and normally lies in position to engage the tumbler 2^o (Fig. 7) when the grippers reach the proper position for closing upon the sheet positioned by the catches 8. The pin 9 is slidable and is provided near its outer end with a slot which is engaged by a cam member 9^b on arm 9^c of a compound lever 9^c—9^m pivoted at 9^d on the main frame. Said lever is provided with a short arm 9^e which is engaged by an expansion spring 9^g interposed between the arm 9^e and a stop 9^h attached to a suitable fixed portion of the frame, said spring tending to throw the lever into position to retract the pin 9 out of operative position.

The lever is held in position to normally hold pin 9 in operative position against the action of the spring 9^g, by means of a latch 10 (Fig. 3) hung on a pivot 10^a attached to a suitable part of the frame, said latch having a notched lower end 10^b adapted to engage a pin 9^o on the arm 9^c and hold the compound lever in the position shown in Fig. 1, with spring 9^g under tension.

To the latch 10 is pivotally connected a

rod 10^d which passes loosely through an arm 5^r attached to shaft 5, and a free spring 10^e is strung on rod 10^d between the said arm and the collar 10^f on the outer end of rod 10^d, so that when shaft 5 is rocked arm 5^a will through the spring and rod 10^d swing latch 10 out of engagement with the pin 9^c; so as to permit spring 9^g to rock the compound lever and withdraw the gripper tripping pin out of operative position.

As the spring 9^g is much more powerful than the spring 10^e it is desirable that at the moment when the latch should be disengaged the pressure between the catch 10 and pin 9^c should be relieved, and for this purpose I provide a cam 9^w adjacent the end of the cylinder 1, and which rotates with said cylinder; and said cam 9^w (Fig. 1) will engage with a roller or pin 9^t on arm 9^c, just before the time when the cylinder grippers should close upon a sheet, and relieve the pressure of pin 9^c against the catch 10, so that if the detectors should find a misplaced or defective sheet and cause shaft 5 to be rocked as above described latch 10 would be disengaged from the pin 9^c and spring 9^g will throw the compound lever and retract the tumbler pin 9 so that the cylinder grippers will not close upon the sheet.

Pivoted upon the frame beside arm 9^c is a bell crank lever having an arm 11 adapted to engage a pin 9^k on the arm 9^c. This bell crank lever is pivoted at 11^c on the frame, and its other arm 11^b is connected by a rod 11^e to the lever 3^f adjacent dog 4, so that whenever said lever 3^f is moved downward, the bell crank lever will be rocked and its arm 11 will engage pin 9^k and return the compound lever to normal position, putting the spring 9^g under compression. This action takes place every time the parts have been tripped and before the gripper fingers again reach the taking point; so that each time tumbling pin 9 is thrown out of operative position it will be returned to operative position in time to operate the grippers when they next reach the taking point, provided a sheet has been properly fed down and is ready to be seized; but if the sheet is not in such position the parts will be tripped as before and the tumbling pin 9 retracted so as to prevent the closing of the cylinder grippers.

The cam end 9^b of arm 9^c is extended up behind lever 8^c (see ante) and has a cam portion 9^u which is adapted to engage the slotted end of the pin 8^f (Figs. 9 and 10), so that when the arm 9^c is shifted to throw out the tumbling pin 9 the pin 8^f is also retracted, so that although lever 8^c rises the finger 8^t and shaft 8^c are not affected, and consequently the sheet gages 8 remain down under tension of spring 8° in the position shown in Fig. 4, so that the misplaced or defective sheet cannot pass. When the arm 9^c is returned to normal position so as to return the tumbling pin 9 into operative position, the cam portion 9^u also causes pin 8^f to return to normal position, and then the sheet gages will be raised and lowered at the proper times, as required in the normal operation of the press.

In the ordinary operation of the press shown and indicated in the drawings and described in my aforesaid patent the cylinder grippers are closed upon the sheet at the taking point by pin 9 and are opened at the delivery point as indicated by means of a pin 9^n; which corresponds to pin 9 and is preferably mounted on the frame in position to be engaged by the tumbler 2° on the gripper shaft so as to open the grippers at the moment that the sheet should be delivered. But if the cylinder grippers are not closed at the taking point, the second pin 9^n should also be thrown out so that it will not operate the grippers, as it would then cause the grippers to close at the delivery point, and therefore the grippers would be closed when they next reached the taking point. The gripper pin 9^n is preferably provided with a cam slot, like gripper pin 9, which is engaged by a cam 9^p on the end of arm 9^m of the compound lever 9^c—9^m so that the pin 9^n is thrown in and thrown out as and when the pin 9 is thrown in or thrown out; consequently if the grippers are not shifted at the taking point they pass the delivery point without being shifted.

During the time that the grippers are traveling from the delivery to the gripping point the compound lever 9^c—9^m is returned to normal position by the action of the compound lever 11—11^b as above described. And if a sheet has been properly positioned then the gripper will take such sheet, but if it has not been properly positioned the pins 9 9^n will be again retracted so that the grippers will not take the sheet. When a sheet is properly fed the cylinder will be automatically thrown on impression, and the compound lever 9^c—9^m, will be locked down by the latch 10 so that the cylinder grippers will be operated at the proper times.

Operation.

From the foregoing it will be seen that if an imperfect or misplaced sheet is found by the detector fingers 5^e the shaft 5 will be rocked and through the described connections the impression will be thrown off, the feed of the sheets will be stopped, the cylinder grippers will be rendered ineffective and cannot take a sheet, and the sheet gages will remain down so that the defective sheet cannot jar or slide into the press; and although the major heavy portions of the press and feed mechanism continue to go through their cycle of movements at speed

the devices which practically handle the sheets are rendered ineffective.

A defective sheet will remain upon the feed board until it is removed by the pressman, and a misplaced sheet will remain upon the feed board until it is properly positioned or removed, and the advance of the following sheets is suspended until the defective sheet is removed or the misplaced sheet properly positioned. Then the pressman by simply throwing the lever 7' permits the feed of the sheets, and at the same time permits all the other parts to return to normal position and the sheets can be immediately fed and printed at the same speed at which the press was operating at the time the misplaced or defective sheet was directed; and thus no time is lost in stopping or slowing down or speeding up any heavy moving parts of the press feeder; and the only interruption and only delay in the printing operation is the short time required for a misplaced sheet to be positioned or for the pressman to remove the defective sheet, and throw the lever 7'.

What I claim is:

1. In sheet printing mechanism, the combination of an impression cylinder, and a printing member co-acting therewith, said cylinder being provided with sheet grippers, gages for arresting sheets in position to be delivered to the cylinder grippers; means for throwing on and off impression, and means for rendering the cylinder grippers ineffective at the taking point; with devices adapted to detect misplaced or defective sheets, and means whereby, when a defective or misplaced sheet is fed, the throw off devices are permitted to operate, the sheet gages are left down, and the means for rendering the cylinder grippers ineffective operate.

2. In sheet printing mechanism, the combination of an impression cylinder, and a printing member co-acting therewith, said cylinder being provided with sheet grippers; gages for arresting sheets in position to be taken by the cylinder grippers; means for throwing on and off impression, and means for rendering the cylinder grippers inoperative at the taking and delivery points; with devices adapted to detect misplaced or defective sheets, and means controlled by said detecting devices whereby when a defective or misplaced sheet is fed down the throw off devices are permitted to operate, the sheet gages are left down, and the means for rendering the cylinder grippers ineffective operate.

3. In sheet printing mechanism, the combination of an impression cylinder and a printing member co-acting therewith, said cylinder being provided with grippers, sheet gages for arresting sheets in position to be taken by the cylinder grippers, means for throwing on and off impression, and means for rendering the cylinder grippers ineffective at the taking point; with devices adapted to detect a misplaced or defective sheet fed to the cylinder, and connections whereby, if a defective or misplaced sheet is fed to the taking point, the sheet feeding devices are held in ineffective position the sheet gages are left down to prevent the advance of the sheet; the impression is thrown off and the cylinder grippers rendered ineffective.

4. In sheet printing mechanism, the combination of an impression cylinder and a printing member co-acting therewith, said cylinder being provided with grippers, sheet gages for arresting sheets in position to be taken by the cylinder grippers, means for throwing on and off impression, and means for rendering the cylinder grippers ineffective; with devices adapted to detect a misplaced or defective sheet fed to the cylinder, and connections whereby, if a defective or misplaced sheet is fed to the taking point, the sheet feeding devices are held in ineffective position, the sheet gages are left down to prevent the advance of the sheets, the impression is thown off, and the cylinder grippers rendered ineffective.

5. In sheet printing mechanism, the combination of an impression cylinder and a printing member co-acting therewith, said cylinder being provided with grippers; sheet gages for arresting sheets in position to be taken by the cylinder grippers, automatic means for feeding the sheets to the cylinders, means for throwing the cylinder on and off impression, and means for rendering the cylinder grippers ineffective, with devices adapted to detect a misplaced or defective sheet fed to the cylinder; means controlled by said detector devices, and connections between said detector controlled means the sheet feeding devices the throw off devices, the gripper controlling devices and the gage operating devices, whereby, if a defective or misplaced sheet is fed to the taking point, the sheet feeding devices are held in ineffective position; the gages are left down to prevent the advance of the sheet; the cylinder is thrown off impression and the cylinder grippers rendered ineffective.

6. In combination a printing mechanism, sheet gages, a rock shaft for operating the gages, a lever adjacent the rock shaft, means for oscillating said lever, and devices for engaging or disengaging the lever from the rock shaft; with means for detecting a misplaced or defective sheet, and connections between said detecting means and the said devices whereby if a misplaced or defective sheet is detected the gages are left down.

7. In combination impression mechanism, sheet gages, a rock shaft carrying the said

gages, a lever loosely pivoted on said shaft, and means for oscillating said lever; a finger on said shaft, a pin connected with said lever adapted to engage said finger to rock the shaft, and means for shifting said pin into or out of finger engaging position; with devices for detecting a misplaced or defective sheet and connections between said detecting devices and the pin controlling devices whereby the latter is withdrawn so as to let the gages stay down when a defective or misplaced sheet is detected.

8. In combination sheet printing mechanism, a feed table, sheet stops and means whereby upon the presentation of a misplaced or defective sheet the taking of the sheet is prevented and the stops positioned to prevent the passage of such sheet between the printing members.

9. In combination sheet printing mechanism, means for feeding sheets to said printing mechanism, sheet stops and means whereby upon the presentation of a misplaced or defective sheet the feed of sheets is stopped and the stops positioned to prevent the passage of such sheet between the printing members.

10. In combination sheet printing mechanism, a feed table, sheet stops and devices for detecting misplaced or defective sheets; with means controlled by the detecting devices whereby upon the presentation of a misplaced or defective sheet the taking of such sheet is prevented, and the stops positioned to prevent the passage of such sheet between the printing members.

11. In combination sheet printing mechanism, sheet feeding devices, sheet stops, gripping devices to take the sheets and devices for detecting misplaced or defective sheets; with means controlled by the detecting devices whereby upon the presentation of a misplaced or defective sheet the sheet gripping devices are rendered ineffective, and the stops positioned to prevent the passage of such sheet between the printing members.

12. In combination sheet printing mechanism, means for automatically feeding sheets to said printing mechanism; sheet stops, sheet taking devices and means for detecting misplaced or defective sheets; with means whereby upon the presentation of a misplaced or defective sheet the sheet taking devices are rendered ineffective, and the stops are positioned to prevent entry of such sheet between the printing members.

13. In combination sheet printing mechanism, means for automatically feeding sheets to said printing mechanism, sheet gages and means for detecting misplaced or defective sheets; with means controlled by the detecting devices whereby upon the presentation of a misplaced or defective sheet the feed of sheets is stopped, the sheet taking devices are rendered ineffective, and the gages are positioned to prevent entry of such sheet between the printing members.

14. In combination sheet printing mechanism, means for automatically feeding sheets to said printing mechanism, a cylinder having grippers, sheet gages and means for detecting misplaced or defective sheets; with means controlled by the detecting devices whereby upon the presentation of a misplaced or defective sheet the feed of sheets is stopped the grippers on the cylinder are rendered ineffective, the impression is thrown off, and the gages positioned to prevent entry of such sheet between the printing members.

15. In a sheet printing mechanism, the combination of a cylinder provided with sheet grippers, means for arresting sheets in position to be taken by the cylinder grippers; and means for rendering the cylinder grippers ineffective; with devices adapted to detect misplaced or defective sheets, and means whereby, when the detectors find a defective or misplaced sheet, the sheet arresting means is positioned to arrest the sheet and the means for rendering the said grippers ineffective operate.

16. In sheet printing mechanism, the combination of a cylinder provided with sheet grippers; means for arresting sheets in position to be taken by the cylinder grippers; and means for rendering the cylinder grippers ineffective at the taking and delivery points; with devices adapted to detect misplaced or defective sheets, and means controlled by said devices whereby when a defective or misplaced sheet is detected the sheet arresting means is positioned to arrest the sheet, and the means for rendering the cylinder grippers ineffective operate.

17. In sheet printing mechanism, the combination of a cylinder provided with sheet grippers, gages for arresting sheets in position to be taken by the cylinder grippers; means for throwing on and off impression, and means for rendering the cylinder grippers ineffective; with devices adapted to detect misplaced or defective sheets, and means whereby, when a defective or misplaced sheet is detected, the throw off devices are permitted to operate, the sheet gages are left down, and the means for rendering the said grippers ineffective operate.

18. In sheet printing mechanism, the combination of a cylinder provided with sheet grippers; gages for arresting sheets in position to be taken by the cylinder grippers; means for throwing on and off impression, and means for rendering the cylinder grippers inoperative at the taking and delivery points; with devices adapted to detect misplaced or defective sheets, and means controlled by said detecting devices whereby when a defective or misplaced sheet is fed

down the throw off devices are permitted to operate, the sheet gages are left down, and the means for rendering the cylinder grippers ineffective operate.

19. In combination sheet printing mechanism including an impression member provided with grippers, a feed table, sheet gages and devices for detecting misplaced or defective sheets; with means controlled by the detecting devices whereby upon the presentation of a misplaced or defective sheet the taking of such sheet by the grippers on the impression member is prevented, and the gages positioned to prevent the entry of such sheet between the printing member.

20. In combination sheet printing mechanism including an impression member provided with grippers, a feed table, sheet gages and devices for detecting misplaced or defective sheets; with means controlled by the detecting devices whereby upon the presentation of a misplaced or defective sheet the sheet gripping devices on the impression member are rendered ineffective, and the gages positioned to prevent the entry of such sheet between the printing members.

21. In a sheet printing mechanism, the combination of an impression cylinder and a printing member co-acting therewith, said cylinder being provided with sheet taking devices; automatic means for feeding sheets to the cylinder, sheet stops, means for throwing on and off impression, and means for rendering the cylinder sheet taking devices ineffective; with devices adapted to detect a misplaced or defective sheet; and means whereby, if a defective or misplaced sheet is fed, the throw off devices are permitted to operate and throw off the impression, the means for rendering the cylinder sheet grasping devices ineffective also permitted to operate, and the stops are positioned to prevent entry of such sheet between the printing members.

22. In a sheet printing mechanism, the combination of an impression cylinder and a printing member co-acting therewith, said cylinder being provided with sheet grasping devices; automatic means for feeding sheets to the cylinder, sheet gages, means for throwing on and off impression, and means for rendering the cylinder sheet grasping devices ineffective at the taking and delivery points; with devices adapted to detect a misplaced or defective sheet, and means whereby, if a defective or misplaced sheet is fed, the throw off devices are permitted to operate and throw off the impression, the means for rendering the cylinder sheet grasping devices ineffective also permitted to operate, and the gages are positioned to prevent entry of such sheet between the printing members.

23. In sheet printing mechanism, the combination of an impression cylinder and a printing member co-acting therewith, said cylinder being provided with sheet grippers; automatic means for feeding the sheets to the cylinder; means for throwing on and off impression; and means for rendering the cylinder grippers ineffective; with devices adapted to detect a misplaced or defective sheet fed to the cylinder; means controlled by said detecting devices; and connections between said detector controlled means, the sheet feeding devices, the throw off devices and the gripper controlling devices; whereby, if a defective or misplaced sheet is fed, the feed of sheets is stopped, the impression is thrown off, and the cylinder grippers rendered ineffective.

24. In combination an impression cylinder having a gripper shaft, and a reciprocatory gripper operating pin having a slot, a pivoted lever having a cam end adapted to engage the slot in said pin, a spring for moving said lever to throw the pin into inoperative position, and means for holding the lever and pin in operative position; with sheet detectors and connections whereby the lever is released and the pin moved into inoperative position by the spring when the detectors find an imperfect or misplaced sheet.

25. In combination a rotary impression cylinder having sheet grippers, and slotted pins adapted to operate the grippers at the taking and delivering points; with an oscillating lever having cam portions engaging the slots in the pins and adapted in one position to hold the pins in operative position, means for throwing the lever to shift the pins to inoperative position; and means for normally locking the lever with the pins in operative position.

26. In combination a rotary impression cylinder having sheet grippers, and slotted pins adapted to operate the grippers at the taking and delivering points; an oscillating lever having cam portions engaging the slots in the pins and adapted in one position to hold the pins in operative position, means for throwing the lever to shift the pins to inoperative position; and means for normally locking the lever with the pins in operative position; with sheet detecting means, and connections whereby when a misplaced or imperfect sheet is fed the said lever is unlocked, and the pins thereby thrown into inoperative position.

27. In combination mechanism for operating upon sheets, means for directing sheets thereto, a sheet stop, means for automatically moving such stop into and out of the path of the sheets, and means whereby upon the presentation of a misplaced or defective sheet such stop is allowed to remain in the path of such sheet to prevent its forward movement.

28. In combination sheet printing mecha-

nism, means for feeding sheets to said printing mechanism, a positive sheet stop, means for automatically moving such stop into and out of the path of the sheets, and co-acting means whereby upon the presentation of a misplaced or defective sheet the feed of sheets is stopped and said stop is allowed to remain in the path of the sheet to prevent its passing to the printing mechanism.

29. In combination sheet printing mechanism, means for feeding sheets to said printing mechanism, a positive sheet stop, means for automatically moving such stop into and out of the path of the sheets; and co-acting means whereby upon tthe presentation of a misplaced or defective sheet the feed of sheets is stopped, said stop is permitted to remain in the path of the sheet, and the taking of such sheet by the printing mechanism is prevented.

30. In combination sheet printing mechanism, means for feeding sheets to said printing mechanism; a positive sheet stop, means for automatically moving such stop into and out of the path of the sheets; and co-acting means whereby upon the presentation of a misplaced or defective sheet the feed of sheets is stopped, said stop is permitted to remain in the path of the sheet to arrest it, the taking of such sheet by the printing mechanism is prevented, and the impression is also thrown off.

31. In combination mechanism for operating upon sheets, means for directing sheets thereto, a sheet stop, means whereby upon the presentation of a misplaced or defective sheet such stop is introduced into the path of such sheet to prevent its forward movement; and means for thereafter automatically removing the stop from the path of a properly positioned perfect sheet.

32. In combination sheet printing mechanism, means for feeding sheets to said printing mechanism, a positive sheet stop, co-acting means whereby upon the presentation of a misplaced or defective sheet the feed of sheets is stopped, and said stop is introduced into the path of the sheet to arrest it; and means for thereafter automatically removing the stop from the path of a properly positioned perfect sheet.

33. In combination sheet printing mechanism, means for feeding sheets to said printing mechanism, a positive sheet stop; co-acting means whereby upon the presentation of a misplaced or defective sheet the feed of sheets is stopped, said stop is introduced into the path of the sheet to arrest it, and the taking of such sheet by the printing mechanism is prevented; and means for thereafter automatically removing the stop from the path of a properly positioned perfect sheet.

34. In combination mechanism for operating upon sheets, including a member having grippers; means for directing sheets thereto, a sheet stop, and co-acting means whereby upon the presentation of a misplaced or defective sheet such stop is introduced into the path of the sheet to arrest it and the grippers on said member are rendered ineffective to take such sheet.

35. In combination mechanism for operating on sheets, means for directing sheets to said mechanism, means for detecting misplaced or defective sheets, a sheet stop; and co-acting means controlled by the detecting mechanism whereby upon the presentation of a misplaced or defective sheet the stop is introduced into the path of the sheet to prevent such sheet passing the registering point and the devices for taking the sheet are rendered ineffective.

36. In combination mechanism for operating on sheets, means for directing sheets to such mechanism, means for detecting defective or improperly placed sheets; means whereby upon the presentation of a misplaced or defective sheet the sheet stop is permitted to remain in the path of the sheet to arrest such sheet; and means for thereafter automatically removing the stop from the path of a properly positioned sheet.

37. In combination sheet printing mechanism, means for directing sheets to the printing mechanism, means for detecting misplaced or defective sheets, a sheet stop; and co-acting means whereby upon the presentation of a misplaced or defective sheet such stop is permitted to remain in the path of such sheet, the sheet taking devices of said mechanism are rendered ineffective, and the impression is thrown off.

38. In combination sheet printing mechanism including a gripper cylinder; means for directing sheets to the printing mechanism, means for detecting misplaced or defective sheets, a sheet stop; and co-acting means controlled by the detecting mechanism whereby upon the presentation of a misplaced or defective sheet such stop prevents such sheet passing the registering point, the sheet taking devices or grippers on the cylinder are rendered ineffective, the impression is thrown off, and the feed of the sheets is stopped.

39. In combination sheet printing mechanism, means for directing sheets to the printing mechanism, means for detecting misplaced or defective sheets, a sheet stop; co-acting means whereby upon the presentation of a misplaced or defective sheet such stop is permitted to remain in the path of such sheet, the sheet taking devices of said mechanism are rendered ineffective, and the impression is thrown off; and means for thereafter automatically removing the stop from the path of a properly positioned sheet.

40. In combination sheet printing mecha-

nism including a gripper cylinder, means for directing sheets to the printing mechanism, means for detecting misplaced or defective sheets, a sheet stop; co-acting means controlled by the detecting mechanism whereby upon the presentation of a misplaced or defective sheet such stop prevents such sheet passing the registering point, the sheet taking devices or grippers on the cylinder are rendered ineffective, the impression is thrown off, and the feed of the sheets is stopped; and means for thereafter automatically removing the stop from the path of a properly positioned sheet.

In testimony that I claim the foregoing as my own, I affix my signature.

BURT F. UPHAM.