April 24, 1934. H. E. SHOEMAKER 1,956,160

BAG FOLDING AND SEALING MACHINE

Original Filed March 3, 1931 2 Sheets-Sheet 1

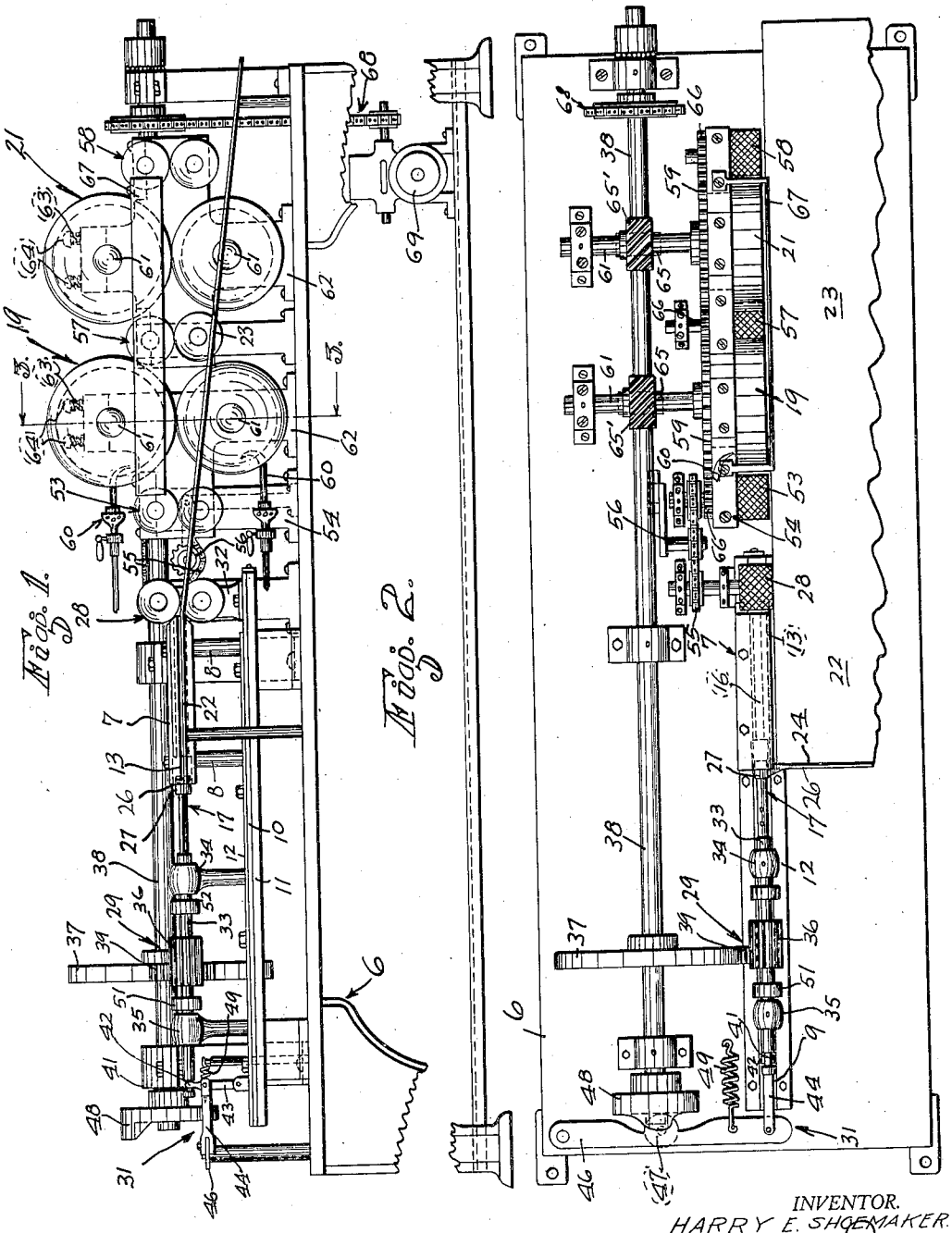

Fig. 1.

Fig. 2.

INVENTOR.
HARRY E. SHOEMAKER.
BY Lucas & Johnson
ATTORNEYS.

April 24, 1934. H. E. SHOEMAKER 1,956,160

BAG FOLDING AND SEALING MACHIN E

Original Filed March 3, 1931 2 Sheets-Sheet 2

Fig. 3.

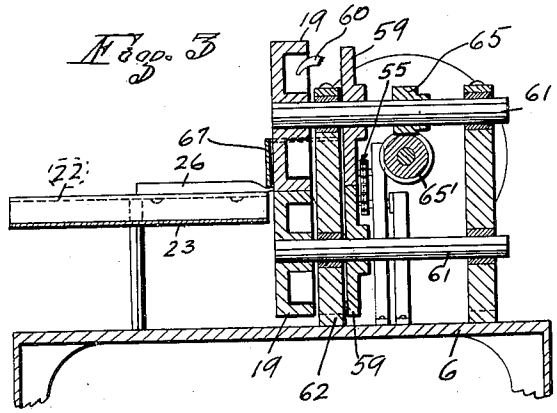

Fig. 6.

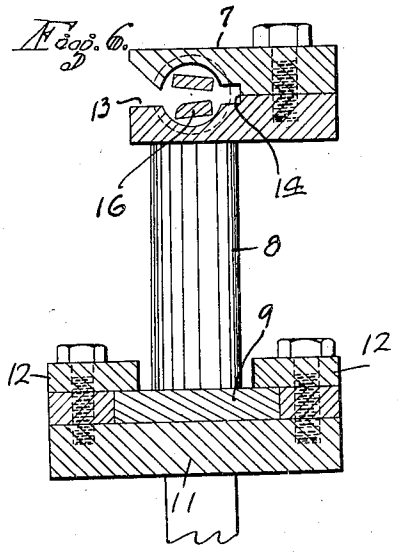

Fig. 4.

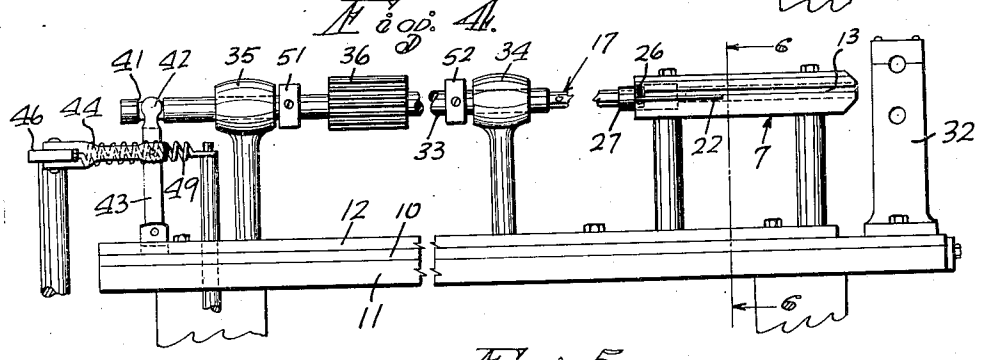

Fig. 5.

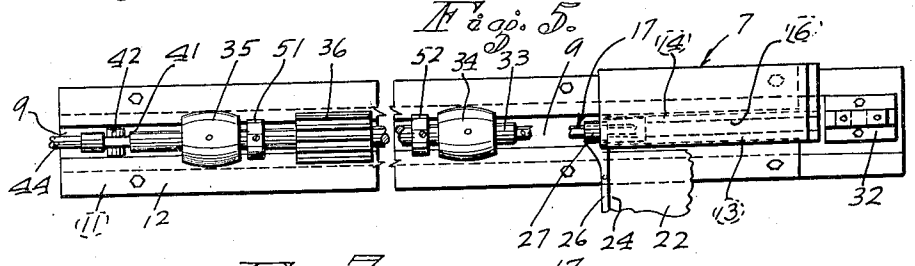

Fig. 7.

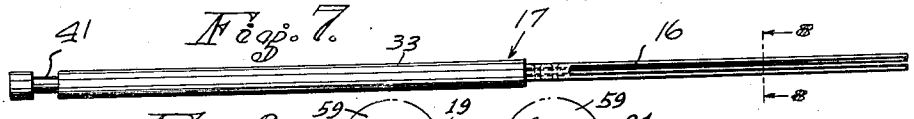

Fig. 8.

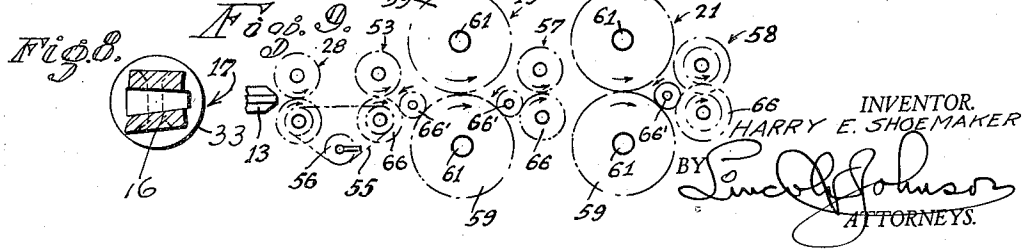

Patented Apr. 24, 1934

1,956,160

UNITED STATES PATENT OFFICE

1,956,160

BAG FOLDING AND SEALING MACHINE

Harry E. Shoemaker, San Francisco, Calif.

Application March 3, 1931, Serial No. 519,723
Renewed September 21, 1933

22 Claims. (Cl. 93—2)

This invention relates to bag folding and sealing machines.

The primary object of the invention is the provision of a machine for folding and sealing the end of a paper bag or the like, such as wax paper bags used to hold potato chips, nuts, or other articles, the folding and sealing of an open end of said bag being accomplished by this machine automatically, efficiently and speedily, without tearing or wrinkling the bags, or otherwise injuring the same.

Another object of the invention is the provision of a mechanism to automatically fold over the open end of a bag by the rotation of a bifurcated folding member within a casing, means being provided in the casing to facilitate the insertion and removal, and also the folding over of the end of the bag.

Another object of the invention is the provision of a machine of the character described in which the open end of a bag is folded by a rotating bifurcated element, the folded bag being withdrawn endwise from said element into a sealing and pressing mechanism to be sealed without injuring the sealing material on the bag; automatically actuated means being provided to break the adhesion between the forked element and the folded end of the bag; and to convey the folded bag through the entire machine.

Other objects and advantages are to provide a bag folding and sealing machine that will be superior in point of simplicity, inexpensiveness of construction, positiveness of operation, and facility and convenience in use and general efficiency.

In this specification and the annexed drawings, the invention is illustrated in the form considered to be the best, but it is to be understood that the invention is not limited to such form, because it may be embodied in other forms; and it is also to be understood that in and by the claims following the description, it is desired to cover the invention in whatsoever form it may be embodied.

The invention is clearly illustrated in the accompanying drawings wherein,

Fig. 1 is a side view of the machine constructed in accordance with my invention.

Fig. 2 is a top plan view of the machine.

Fig. 3 is a sectional view of the machine, the section being taken on the line 3—3 of Fig. 1.

Fig. 4 is a fragmental detail view of the folding mechanism of the machine.

Fig. 5 is a plan view of the folding mechanism.

Fig. 6 is a sectional view of the folding mechanism, the section being taken on the line 6—6 of Fig. 4.

Fig. 7 is a detail view of the bifurcated folding element.

Fig. 8 is a cross sectional view of the folding element, the section being taken on the line 8—8 of Fig. 7.

Fig. 9 is a diagrammatic view, in dash and dot lines, of the gear drive assembly of my machine.

In carrying out my invention I make use of a frame 6 on which is mounted a casing or sleeve 7, on legs 8. The legs 8 are fixed on a base plate 9, which is slidably clamped on a platform 11 above the frame 6, by means of clamping plates 12 bolted onto the platform 11 and spaced from the same by spacers 10. The edges of the plates 12 overlap the respective sides of the base plate 9 to slidably hold the latter in place.

The sleeve 7 is made of two complemental sections forming a substantially cylindrical, longitudinal passage through the sleeve. In the front side of the sleeve 7 is provided a longitudinal intake slot 13 having its upper edge tapered inwardly of the sleeve. In the wall of the sleeve 7 opposite the slot 13 is cut a longitudinal recess 14 of substantially rectangular cross section, in alignment with the slot 13.

A bifurcated end 16 of a folding fork 17 is rotatably disposed in the passage of the sleeve 7 in such position that the slot between the branches of the bifurcated end 16 is normally held in registry with said intake slot 13 and the recess 14.

The actual folding of the open end of a paper bag is accomplished by inserting the end of the bag through the intake slot 13 and between the branches of the fork end 16 into the recess 14. The end is held within said recess 14 until the fork 17 is rotated. It is to be noted that the lower branch of the bifurcated end 16 is mitered at its intake edge to facilitate the insertion of the end of the bag therethrough. After the bag is inserted, the fork element 17 is rotated a complete revolution thereby folding the end of the bag around the fork end 16, forming a double fold closure at the said end of the bag.

The folded bag is then removed from the sleeve 7 endwise, to the forked end 16, to be passed through a set of heated rolls 19 to be sealed thereby, and through a pair of cold rolls 21 to be ironed and pressed into its final shape.

The feeding of the bags into the sleeve 7 is facilitated by the use of an apron 22 mounted on

the frame 6 in alignment with the lower edge of the intake slot 13. The apron 22 is extended in front of the heated rolls 19 and cold rolls 21, at a proper inclination as at 23, to support the body of the bag while the end thereof is passed through the subsequent mechanisms. Alongside the edge 24 of the apron 22 adjacent the sleeve 7 is disposed a stop 26 to prevent the movement of the bag in that direction. The stop 26 has a hub 27 thereon extended into the adjacent counterbored end of the passage in the sleeve 7. The fork element 17 rotatably extends through the hub 27.

The folded bag is removed from the sleeve 7 by axially moving the fork 17 and the sleeve 7 in the direction of the stop 26 so as to leave the farther edge of the bag end uncovered to be gripped by a set of conveyor rolls 28 and to be withdrawn endwise by said rolls 28, from the fork and from the sleeve. To permit such withdrawal the slot 13 is extended to the discharge end of the sleeve 7.

In order to break the adhesion between the fork end 16 and the folded end of the bag, the fork is moved slightly out of the folded end prior to the moving of the sleeve 7 itself. The fork 17 itself is rotated by an intermittent rotating mechanism denoted in its entirety by the numeral 29. The axial movement of the fork element 16, the sleeve 7 and the conveyor rolls 29 is accomplished by a cam actuated mechanism designated in its entirety by the numeral 31. Said mechanism 31 is connected to and is operated in synchronism with the intermittent rotating mechanism 29 so that it operates when the fork element 17 is at a standstill, the former being rotated a revolution at a time when the sleeve 7 is in normal position.

The conveyor rolls 28 are mounted one above the other in a bearing bracket 32 mounted on the base plate 9 to move with the latter. The stem 33 of the fork element 17 is rotatably supported in bearings 34 and 35 which are also mounted on the plate 9 to move therewith. Between the bearings 34 and 35 is a gear 36 fixed on the fork stem 33. A driving disc 37 is disposed in operative relation to the driven gear 36. The driving disc 37 is fixed on a drive shaft 38 disposed parallel to the stem 33 and extended throughout the length of the top of the frame 6 to transmit movement to the various mechanisms of the machine in synchronism. The periphery of the disc 37 is smooth except a section 39 thereof which is provided with gear teeth for engagement with the driven gear 36, once during each revolution of the driving disc 37. The length of the toothed section 39 is such as to cause exactly one complete revolution of the fork element 17, while the section 39 is in mesh with the gear 36. The disc 37 and gear 36 constitute the intermittent drive mechanism 29 whereby the fork element 17 is rotated to fold the end of the bag.

The free end of the fork stem 33 has an annular groove or neck of reduced diameter 41 cut therein for engagement with a yoke 42 in the end of a lever 43, which latter is fulcrumed on the base plate 9. The lever 43 has an end of a link 44 pivotally secured thereto intermediate the ends of the lever 43. The other end of the link 44 is connected to the free end of an actuating lever arm 46, which latter has its other end fulcrumed in the top of the frame 6, beyond the shaft 38. Intermediate the ends of the lever arm 46 is mounted a cam roller 47 engaging a face cam 48 on the end of the shaft 38. A spring 49 connected to the lever arm 46 at one end and to the top of the frame 6 on the other end thereof, urges the lever arms 46 toward the face cam 48.

It is to be noted that the disc section 39 engages the gear 36 and rotates the fork element 17 a complete revolution to fold the bag before the face cam 48 begins to move the lever arm 46 outwardly, to the left, viewing Fig. 2. The initial outward movement of the lever arm 46 is transmitted by the link 44 to the lever 43 to swing the latter around its fulcrum so that the movement of the yoke 42 pulls the fork element 17 out of the sleeve 7 to a slight distance to break the adhesion between the fork and the bag. The last mentioned distance being determined by a collar 51 fixed on the fork stem 33 between the gear 36 and the bearing 35, which collar 51 abuts against the bearing 35 when the desired short distance is traveled by the fork element 17. Thereupon the lever 43 rigidly connects the fork to the plate 9 and the subsequent outward movement of the lever arm 16 moves through the lever 43, the entire base plate 9 with the fork, the sleeve, and the conveyor rolls 28 thereon, as a unit. The sleeve 7 and fork element 17 thus clear the edge of the bag adjacent the conveyor rolls 28. The bag is held on the apron 22 by the stop 26 and the rolls 28 are drawn over the freed edge thereof as the base plate 9 is moved. The rolls 28 are preferably knurled and are so rotated as to pull the bag out of the sleeve and feed it in the direction of the heated rolls 19.

Inasmuch as the face cam 48 continues to rotate, the lever arm 46 is permitted to be returned into normal position by the action of the spring 49. The initial return movement of the lever 43 causes the partial return of the fork element 17 until another collar 52, disposed between the gear 36 and the bearing 34, abuts against the bearing 34, whereupon the entire base plate 9, the fork element 17, sleeve 7, and rolls 28, are returned to normal position as a unit.

The bags are inserted one after another into the sleeve 7, the fork element 17 is rotated to fold the end of each bag, and the folded bag is withdrawn from the sleeve 7 in the manner heretofore set forth.

A pair of knurled feed rolls 53 is supported in a bearing bracket 54, fixed on the top of the frame 6. The feed rolls 53 receive the bag from the rolls 28 and feed the same between the heated rolls 19. The upper rolls of the pairs of rolls 28 and 53 are connected to each other by sprocket and chain connection 55, to drivingly connect the shafts of the said upper rolls. The chain of the connection 55 is comparatively loose to provide for the slight travel of the rolls 28 with the base plate 9. The disengagement of the said chain from the sprockets is obviated by the use of a chain tightener 56 of the usual type, mounted on the top of the frame 6.

A set of feed rolls 57 is disposed between the heated rolls 19 and the cold rolls 21 to convey the bag therethrough, and another set of feed rolls 58 is disposed outside of the cold rolls 21 to convey the bags out of the machine.

Each of the pair of heated rolls 19 is smooth and is of different diameter than the other heated roll. The upper roll being preferably the larger. The same relation exists between the smooth pair of cold rolls 21. Gas burners 60 of the usual type extend to each roll of the set 19 to heat the same. Each roll of both sets 19 and 21 is driven positively by a spur gear 59. Each roll is a cylin-

drical drum and is supported on a shaft 61 in the respective fixed bearing brackets 62 on the frame 6. The tops of said bearings are preferably split and are provided with springs 63 under the respective holding screws 64 so that pressure engagement between the respective rolls can be regulated. The gears 59 of each set of rolls are of the same pitch diameter, and are in mesh with each other. Due to the different diameters of the adjacent rolls in the respective sets 19 and 21, a slippage occurs at the contact points of the respective pairs of rolls 19 and 21, producing a smoothing and ironing effect on the folded bag passed therebetween. Each of the shafts 61 of the upper roll of each of the pairs 19 and 21 has a gear 65 thereon, in mesh with a worm 65' on the drive shaft 38 whereby the rolls 19 and 21 are driven. Gears 66 on the shafts of the lower rolls of the feed rolls 53, and 57, and 58, are in mesh respectively with intermediate drive pinions 66', the latter being mounted on extensions on the bracket 62. The pinions 66' are in mesh with the adjacent spur gears 59, on the respective lower shafts 61 whereby driving power is transmitted to said feed rolls to rotate the same in the same direction as the rolls 19 and 21, as shown in Fig. 9. The pair of conveyor rolls 28 is drivingly connected to the feed rolls 53 in the manner heretofore set forth.

In some instances wax paper bags have a tendency to adhere to the rolls. The inclined apron portion 23 operates as a stripper plate from the lower rolls of each set. A stripper bar 67 is provided above the contact points of the sets of rolls to prevent the traveling of the adhering bags with the upper rolls of said sets.

The drive shaft 38 is connected by a chain drive 68 to an electric motor 69, whereby all the instrumentalities of the machine are driven.

It will be recognized that a particularly compact, and simple machine is provided for the folding and sealing of paper bags; the machine is entirely automatic, and is operated at such a speed as to allow time to insert a new bag into the machine after a folded bag is withdrawn from the folding mechanism of the machine; the machine may be made to accommodate bags of various sizes and types; it does not require any particular adjustment, therefore it readily lends itself to speedy and efficient application by the labor ordinarily available.

Having thus described this invention, what I claim and desire to secure by Letters Patent is:

1. In a bag folding and sealing machine a frame; a folding casing on the frame; a folding fork in the casing, said casing and fork being adapted to receive the end of a bag therein, and said casing being adapted to hold the bag; means to intermittently rotate the fork to fold the end of the bag; and means to remove the folded bag endwise from the fork.

2. In a bag folding and sealing machine, a frame; a casing on the frame; a folding fork rotatably disposed to receive the end of the bag inserted therethrough; means to intermittently rotate the fork to fold the end of the bag; and conveyor means related to the casing to remove the folded bag endwise from the fork.

3. In a bag folding and sealing machine, a frame; a casing on the frame; a folding fork rotatably disposed to receive the end of the bag inserted therethrough; means to intermittently rotate the fork to fold the end of the bag; conveyor means related to the casing to remove the folded bag endwise from the fork; and a pair of heated rotary elements on the frame in alignment with said conveyor means to receive said folded bag from the conveyor and to seal and convey said bag therebetween.

4. In a bag folding and sealing machine, a frame; a casing on the frame; a folding fork rotatably disposed to receive the end of the bag inserted therethrough; means to intermittently rotate the fork to fold the end of the bag; conveyor means related to the casing to remove the folded bag endwise from the fork; a pair of heated rotary elements on the frame in alignment with said conveyor means to receive said folded bag from the conveyor and to seal and convey said bag therebetween; and a pair of cold rotary elements in alignment with the pair of hot elements to receive the bag therefrom, and to press the same.

5. In a bag folding and sealing machine, a frame; a folding casing on the frame; a folding fork in the casing, said casing and fork being adapted to receive the end of a bag therein and said casing being adapted to hold the bag; means to intermittently rotate the fork to fold the end of the bag; means to move the casing on the frame; means to hold the bag against movement with the casing; and conveying means cooperating with the casing to grip the bag after the casing is moved, and to withdraw said bag from the casing and from said fork.

6. In a bag folding and sealing machine, a frame; a folding casing on the frame; a folding fork in the casing, said casing and fork being adapted to receive the end of a bag therein and said casing being adapted to hold the bag; means to intermittently rotate the fork to fold the end of the bag; means to move the casing on the frame; means to hold the bag against movement with the casing; conveying means cooperating with the casing to grip the bag after the casing is moved, and to withdraw said bag from the casing and from said fork; and means to break the adhesion between the fork and the folded bag before the withdrawal of the bag from the casing.

7. As a sub-combination in a machine of the character described, a hollow casing having a longitudinal slot on one side thereof and a recess therein opposite said slot to receive an end of a bag therein; a slotted folding element rotatable in said casing having its slot normally in alignment with said first slot and recess; and means for intermittently rotating said element a complete revolution at a time, to fold the end of a bag inserted into said slots and recess.

8. As a sub-combination in a machine of the character described, a hollow casing having a longitudinal slot on one side thereof and a recess therein opposite said slot to receive an end of a bag therein; a slotted folding element rotatable in said casing having its slot normally in alignment with said first slot and recess; and means for intermittently rotating said element a complete revolution at a time, to fold the end of a bag inserted into said slots and recess, said casing being adapted to allow the endwise removal of the folded end of the bag from the said element.

9. As a sub-combination in a bag folding machine, a casing having a longitudinal slot on one side thereof, and a recess opposite said slot; a forked folding element rotatable in said casing between the said slot and recess, said element being so arranged as to allow the insertion of an

end of a bag therethrough; and means to intermittently rotate said element to fold the end of the bag inserted thereinto.

10. As a sub-combination in a bag folding and sealing machine, a casing having a longitudinal slot on one side thereof and a recess opposite said slot; a forked folding element rotatable in said casing between the said slot and recess, said element being so arranged as to allow the insertion of an end of a bag therethrough; and means to intermittently rotate said element to fold the end of the bag inserted thereinto, said casing being adapted to allow the removal of the bag from the fork endwisely to the latter.

11. As a sub-combination in a bag folding and sealing machine, a casing longitudinally slotted on one side; a recess in the casing opposite the slot; a folding fork disposed in the casing so that the slot of the fork is in registry with said first slot and recess; and means to intermittently rotate the fork to fold the end of a bag inserted therethrough, said first slot extending to an end of the casing to allow the endwise removal of the folded bag end from the fork.

12. As a sub-combination in a bag folding and sealing machine, a casing longitudinally slotted on one side; a recess in the casing opposite the slot; a folding fork disposed in the casing so that the slot of the fork is in registry with said first slot and recess; and means to intermittently rotate the fork to fold the end of a bag inserted therethrough, said first slot extending to an end of the casing to allow the endwise removal of the folded bag end from the fork, the slot of said fork being of a tapered cross section, the wider end being disposed opposite the said first slot.

13. As a sub-combination in a bag folding and sealing machine, a casing longitudinally slotted on one side; a recess in the casing opposite the slot; a folding fork disposed in the casing so that the slot of the fork is in registry with said first slot and recess; means to intermittently rotate the fork to fold the end of a bag inserted therethrough, said first slot extending to an end of the casing to allow the endwise removal of the folded bag end from the fork; and means to move the fork relative to the folded end of the bag before the removal of the bag to break the seal between the fork and the bag.

14. As a sub-combination in a bag folding and sealing machine, a casing longitudinally slotted on one side; a recess in the casing opposite the slot; a folding fork disposed in the casing so that the slot of the fork is in registry with said first slot and recess; means to intermittently rotate the fork to fold the end of a bag inserted therethrough, said first slot extending to an end of the casing to allow the endwise removal of the folded bag end from the fork; and means to break the adhesion between the fork and the bag before the removal of the latter.

15. In a machine of the character described a frame; a hollow casing supported on the frame, having a longitudinal slot on a side thereof and a recess therein opposite the slot; a bifurcated folding element rotatable in said casing being disposed with the slot of its forked end in alignment with the said casing slot and recess; means to rotate the said folding element intermittently to fold the end of a bag inserted into said slots and recess; means to move the casing axially on the frame; means to hold said bag against movement with the casing; conveying means related to an end of the casing and being adapted to be moved therewith to grip the end of the bag and withdraw the same endwise from the said element; and means related to said casing-moving means to return the casing and said conveying means into the original positions thereof.

16. In a machine of the character described a frame; a hollow casing supported on the frame, having a longitudinal slot on a side thereof and a recess therein opposite the slot; a bifurcated folding element rotatable in said casing being disposed with the slot of its forked end in alignment with the said casing slot and recess; means to rotate the said folding element intermittently to fold the end of a bag inserted into said slots and recess; means to move the casing axially on the frame, said casing moving means being adapted to move said folding element endwise to break the adhesion between said element and the bag; means to hold said bag against movement with the casing; conveying means related to an end of the casing and being adapted to be moved therewith to grip the end of the bag and withdraw the same endwise from the said element; and means related to said casing-moving means to return the casing and said conveying means into the original positions thereof.

17. In a machine of the character described a frame; a casing supported on the frame with freedom of axial sliding movement, and having a longitudinal slot extending from an end thereof on one side, and a longitudinal recess within the casing opposite said slot; a fork rotatable in the casing having its slot in alignment with said first slot and recess; means to rotate the fork intermittently to fold the end of a bag inserted therethrough; conveyor rolls opposite the open end of the slot in the casing adapted to be moved over the edge of the paper to grip the same and to withdraw it endwise from the casing; means operated in synchronism with said intermittent rotating means to move said casing and rolls to bring the rolls over the edge of the bag; means to hold the bag against movement with the casing, said casing moving means being adapted to move said fork prior to the movement of said casing so as to break the adhesion between the fork and the bag; and means to return said casing, fork, and rolls to normal position.

18. In a machine of the character described a frame; a casing supported on the frame with freedom of axial sliding movement, and having a longitudinal slot extending from an end thereof on one side, and a longitudinal recess within the casing opposite said slot; a fork rotatable in the casing having its slot in alignment with said first slot and recess; means to rotate the fork intermittently to fold the end of a bag inserted therethrough; conveyor rolls opposite the open end of the slot in the casing adapted to be moved over the edge of the paper to grip the same and to withdraw it endwise from the casing; means operated in synchronism with said intermittent rotating means to move said casing and rolls to bring the rolls over the edge of the bag; means to hold the bag against movement with the casing, said casing moving means being adapted to move said fork prior to the movement of said casing so as to break the adhesion between the fork and the bag; means to return said casing, fork, and rolls to normal position; and an apron adjacent the slot of the casing to hold the bag, said bag holding means comprising a stop extending into the end of the casing farthest from the conveyor rolls.

19. As a sub-combination in a bag folding and sealing machine, a pair of rotating rolls arranged

with their peripheries opposite each other to receive a folded end of a bag therebetween, one of the rolls being of a larger diameter than the other to cause a slipping and ironing of the bag therebetween.

20. In a machine of the character described, a frame, a casing thereon, having an opening through which an end of a bag can be inserted, a folding element rotatably arranged in said casing, means on said element to engage the end of the bag and to fold the same when the element is rotated, and means to impart intermittent rotary movement to said element in the casing.

21. In a machine of the character described, a frame, a casing thereon, having an opening through which an end of a bag can be inserted, a folding element rotatably arranged in said casing, means on said element to engage the end of the bag and to fold the same when the element is rotated, means to impart intermittent rotary movement to said element in the casing, and means to separate the folded end of the bag and said element from each other.

22. In a machine of the character described, a frame, a hollow casing thereon, a folding element movably arranged within the casing, said casing having an opening thereon to receive the end of a bag therethrough, means on said element to engage said end of the bag, means to move said element relatively to the casing to fold said end of the bag, and means to cause separation of the folded end of the bag from said element.

HARRY E. SHOEMAKER.