April 11, 1939. J. E. ROACH ET AL 2,154,214

CONTAINER AND SEAL THEREFOR

Filed April 23, 1937 2 Sheets-Sheet 1

FIG. 1.

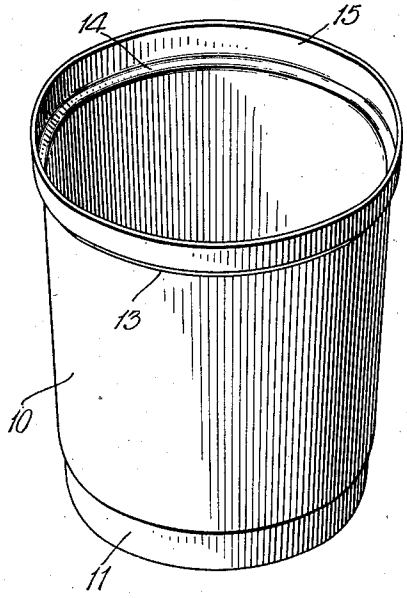

FIG. 2.

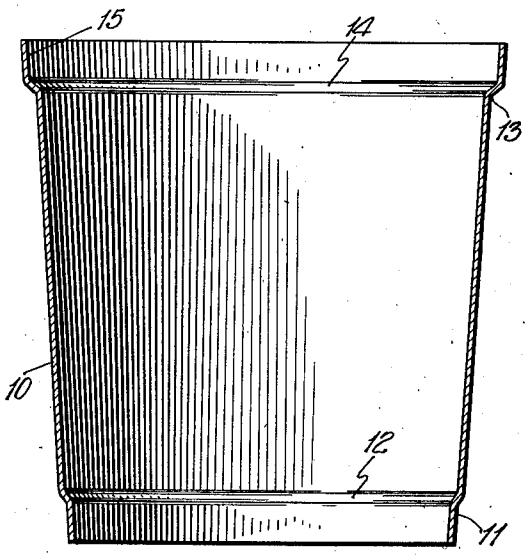

FIG. 3.

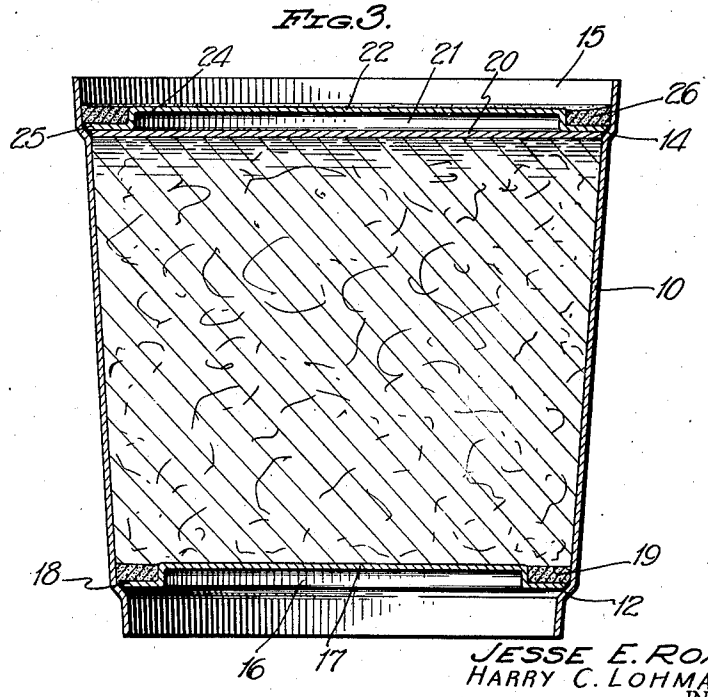

JESSE E. ROACH.
HARRY C. LOHMAN.
INVENTORS.

WITNESS:

BY Ely & Pattison,
ATTORNEYS.

April 11, 1939. J. E. ROACH ET AL 2,154,214

CONTAINER AND SEAL THEREFOR

Filed April 23, 1937 2 Sheets-Sheet 2

FIG. 4.

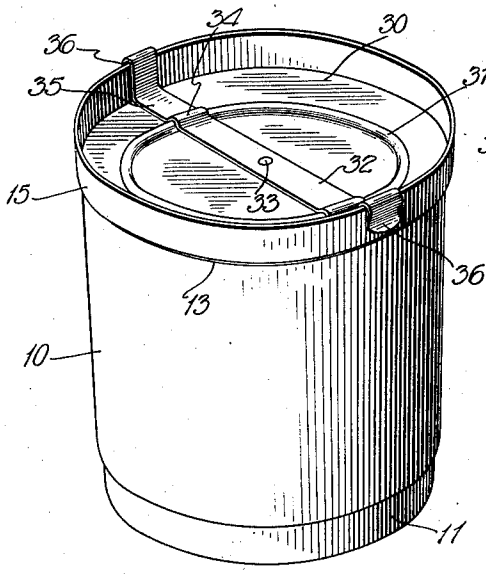

FIG. 5.

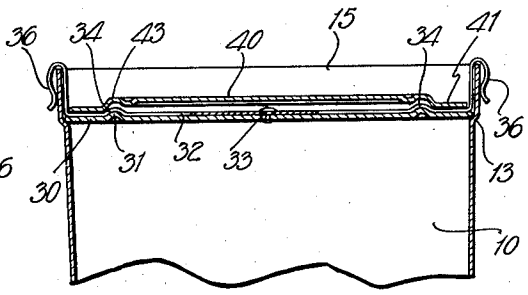

FIG. 6.

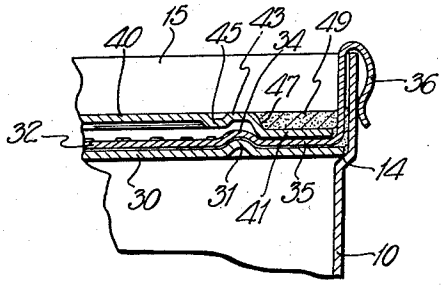

FIG. 7.

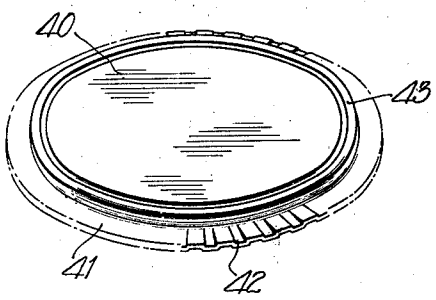

FIG. 8.

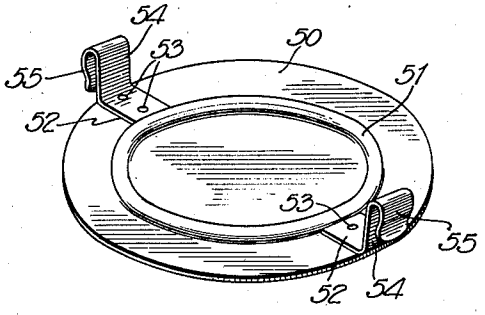

JESSE E. ROACH
HARRY C. LOHMAN.
INVENTORS.

BY Ely & Pattison.
ATTORNEYS.

WITNESS:

Patented Apr. 11, 1939 2,154,214

UNITED STATES PATENT OFFICE

2,154,214

CONTAINER AND SEAL THEREFOR

Jesse E. Roach, New York, and Harry C. Lohman, Brooklyn, N. Y., assignors to Cold Pack Container, Inc., Edgewater, N. J., a corporation of New Jersey

Application April 23, 1937, Serial No. 138,506

7 Claims. (Cl. 229—5.5)

This invention relates to new and useful improvements in containers and more particularly it pertains to containers of the type constructed from moisture-proof material of which wax paper is one very good example.

It is the object of the invention to provide a container in which such materials as preserves and similar semi-fluid materials may be packed and stored for sale.

A feature of the invention resides in a new and improved construction which materially reduces the cost of manufacture thereby rendering the device capable of use for merchandising all products in small quantities at relatively low prices.

A further feature of the invention resides in a novel construction whereby effectual sealing of the container against accidental rupture is provided and consequent discharge of the contents is reduced to a minimum.

A further feature of the invention resides in a novel form of seal or closure for closing one end of the container and sealing the contents therein after the container has been filled.

Still a further feature resides in a new and novel means for opening the container.

Still a further feature resides in a new and novel form of seal whereby the seal, after it has been broken and the container open, will serve as a temporary cover for the container until the contents thereof have been consumed.

Other objects of the invention will appear as the nature thereof is more clearly understood and for this purpose, reference will be had to the following specification and claims and the accompanying drawings, in which:

Figure 1 is a perspective view of a container constructed in accordance with the present invention, the seal or cover of the container being removed,

Figure 2 is a vertical sectional view of the container with the seal or cover and the bottom removed,

Figure 3 is a vertical sectional view of the container with the cover or seal and bottom in place, the container being filled with a product to be stored therein,

Figure 4 is a perspective view illustrating a modified form of seal which form includes means for rupturing the seal to render the same removable,

Figure 5 is a fragmentary vertical sectional view showing the construction of the seal and seal-rupturing means,

Figure 6 is an enlarged fragmentary sectional view showing more specifically the construction of the seal,

Figure 7 is a detail perspective view of one of the sealing elements, and;

Figure 8 is a perspective view of a modified form of sealing element.

Referring specifically to the drawings and particularly to Figures 1 to 3, inclusive, the container comprises a main body portion 10. This main body portion 10 is preferably of slightly tapered cylindrical form. One end of the body portion, preferably the smallest end, is reduced, as designated by the reference character 11 to provide an internal annular shoulder 12 closely adjacent said end. The opposite or larger end of the main body portion is flared outwardly as at 13 to provide an internal annular shoulder 14 from the outer edge of which projects a flange-like portion 15 which forms the mouth of the container.

We do not wish to be limited to any specific method of forming this container but we have found by actual experience that such a container as depicted in the drawings may be economically formed by rolling a strip of paper about a properly shaped form or mandrel and securing the meeting edges thereof together in overlapped relation. It will be noted that this container body differs from the general type in that it has no inwardly turned flange at either end, the support for the bottom and the support for the seal being formed by shaping the side walls of the container adjacent the ends in which these elements are to be mounted.

The bottom of the container is designated 16 and it preferably consists of a disk-like member formed to provide, when the bottom is in its operative position, a raised central portion 17 defined by a container or annular peripheral flange 18. This bottom member is of such transverse dimension that it will be supported upon the internal annular flange 12, heretofore mentioned, and it may be placed in position upon said flange by inserting it through the larger end of the body portion. The side walls of the raised portion 17 and the annular peripheral flange 18 of the bottom member together with the inner side walls of the container body form a channel for the reception of a sealing medium 19. We have found by actual experiment that an effective sealing of the joint between the bottom and the side walls of the container may be obtained by the use of paraffin or a similar wax which is introduced into the channel in fluid form in sufficient quantity that when the sealing medium sets it will completely fill the channel and its upper surface will

be level or substantially flush with the inner surface of the raised portion 17 and the bottom.

By this construction a comparatively cheap bottom construction for paper and similar containers is provided, and furthermore, such a construction has, in actual practice, proven to be of a highly satisfactory nature.

The seal of the container comprises two members 20 and 21. Each of these members are of disk-like nature and are adapted to be inserted in the opposite end of the container body to close the same.

The member 20 is a disk-like member of paper or similar material suitably waterproofed and is of a dimension such that it will engage the base of the annular shoulder 14 as illustrated in Figure 3. When the commodity is placed in the container it will be placed therein in such quantity that when the disk 20 is put in position it will engage the top surface of the commodity as illustrated in Figure 3.

The transverse dimension of the sealing member 21 is slightly greater than that of the sealing member 20, and this dimension is such that the sealing member 21 will, when it is inserted in the larger end of the container 10, rest upon the annular shoulder 14, as illustrated in Figure 3. The central portion of this sealing member 21 is raised as at 22 and this construction provides side walls 24 and an annular flange 25, which side walls and annular flange together with the side walls of the container 10 form a channel for the reception of a sealing medium 26. We have also found by experience that this sealing medium 26 may be of a wax-like nature of which paraffin is a very good example and if introduced into the channel in a fluid state, when set, will not only substantially hermetically seal the contents of the container therein but will also act as a securing means to retain the seals in position in the container.

In Figures 4 to 6, inclusive, we have illustrated a slightly modified form of the invention particularly as pertains to the seal for the container.

In this last-mentioned form the container 10 is formed with the annular shoulder 14, as in the heretofore described form. However, in this last-mentioned form of the invention the sealing medium comprises a disk 30 which is of such transverse dimension that it rests upon the annular shoulder 14, as illustrated in Figure 6. This sealing disk 30 has an annular bead 31 therearound, as best illustrated in Figure 4, the purpose of which will be hereinafter described. Pivotally mounted for rotating movement upon said sealing disk 30 there is a member 32 preferably in the form of an elongated strip of metal pivotally mounted upon the sealing disk as at 33. This member is so constructed as to have rotary movement about its pivotal point and is shaped as at 34 to overlie the bead 31 and to provide a portion 35 which will again contact or substantially contact the outer face of the sealing disk 30 between the annular bead 31 and the peripheral edge of said disk. This member 32 is provided with end extensions 36 which are adapted to engage over the upper edge of the container, as best illustrated in Figures 4 to 6, inclusive, and the purpose of this construction will be hereinafter described.

Superimposed with respect to the sealing disk 30 there is a second sealing disk 40. As best shown in Figure 7, this sealing disk 40 has a peripheral flange 41 which is crimped or corrugated as at 42 and is formed with an annular bead 43 which is so located in the sealing disk 40 as to overlie and receive the annular bead 31 of the sealing disk 30 and the corresponding annular portion of the member 32. This sealing disk 40 also has a depressed portion 45 as best illustrated in Figure 6.

The outer side walls 47 of the portion 43, the annular flange 41 and the inner wall of the adjacent end of the container form a channel for the reception of a sealing medium 49 which, as heretofore stated, may be paraffin wax introduced into said channel in liquid state.

When the sealing medium is introduced in the liquid state, it will probably flow to position between the two sealing disks 30 and 40, and it is the function of the portion or bead 31 of the sealing disk 30 to prevent the flow or spread of this sealing medium to the entire surface of the opposed faces of the sealing disks 30 and 40 and confine it, the sealing medium, to the location at the peripheral edges of said sealing disks. This resultant construction is shown in Figure 6.

It will be noted that when the sealing medium has been introduced into the channel, those portions of the member 32 which extend parallel with the side walls of the container 10 and those portions of said member will be embedded in the sealing medium and a perfect seal will be obtained.

To open the container to remove the contents therefrom, the container is grasped in one hand and the fingers of the other hand are engaged with the extensions 36 of the member 32. This member is then rotated about its pivotal point 33, which action ruptures the sealing medium in the channel and permits of ready removal of the sealing elements or disks to provide access to the contents of the container. This is the first function of the member 32.

The second function of the member 32 is as follows: After the container has been opened, the sealing elements or disks 30 and 40 will provide a temporary closure therefor until such time as it is desired to discard the entire container and when functioning in this manner the extensions 36 of the member 32 provide hooks for engagement with the edge of the end of the container to suspend the sealing disks 30 and 40 in position upon the annular shoulder 14 as a removable cover for the container.

The crimps or corrugations 42, heretofore described, permit of interlocking engagement of the sealing medium with the peripheral edge of the sealing disk 40 and serve to produce better adherence of the sealing medium to the sealing disk 40 than can be obtained if the surface of the annular flange 41 thereof is formed with a plain surface.

In Figure 8 there is shown a still further modified form of sealing element 30. In this form the device comprises a disk-like body portion 50 formed with an annular bead 51 similar to the body portion 30 and bead 31, heretofore described.

In this last form of the invention, however, there is no member 32. In lieu thereof there are two members 52 each of which is secured as at 53 to the disk, preferably at diametrically opposite points. Each of these members has a portion 54 which terminates in a hooked extension 55 which is adapted to engage over the edge of the open end of the container in a manner similar to the extensions 36 of the heretofore described form.

In this last-mentioned form of the invention the entire sealing disk 50 is rotated by these

members 52 to break the seal, and as in the heretofore described form, the hooked extensions 55 of these members constitute means for supporting the sealing medium in position to provide a temporary closure for the container.

From the foregoing it will be apparent that the present invention provides an improved and a new type of container together with seal and temporary closure therefor in which all of the objects heretofore recited are obtained.

It is to be understood that the invention is not limited to the specific construction herein shown but that it may be practiced in other forms without departing from the spirit and scope of the appended claims.

Having thus described the invention, what is claimed as new, is:

1. In a container, a main body portion having an internal annular shoulder adjacent each of its ends, a disk supported upon each of said shoulders, a second disk supported upon one of said first-mentioned disks, a sealing means for securing said second disk in position upon the disk upon which it is supported, and means for rupturing said sealing medium.

2. In a container, a main body portion having an internal annular shoulder adjacent each of its ends, a disk supported upon each of said shoulders, a second disk supported upon one of said first-mentioned disks, a sealing means for securing said last-mentioned disk in position upon the disk upon which it is supported, and means carried by one of said disks for rupturing said sealing medium.

3. In a container, a main body portion having an internal annular shoulder adjacent each of its ends, a disk supported upon each of said shoulders, a second disk supported upon one of said first-mentioned disks, a sealing means for securing said second disk in position upon the disk upon which it is supported, and means rotatably mounted between the last mentioned disks for rupturing said sealing medium.

4. In a container, a main body portion having an internal annular shoulder adjacent each of its ends, a disk supported upon each of said shoulders, a second disk supported upon one of said first-mentioned disks, a sealing means for securing said last-mentioned disk in position upon the disk upon which it is supported, and means rotatable between said disks for rupturing said sealing medium, said rupturing means including extensions which embrace the defining edge of the adjacent open end of the container.

5. In a container, a main body portion having an internal annular shoulder adjacent each of its ends, a disk supported upon each of said shoulders, a second disk supported upon one of said first-mentioned disks, a sealing means for securing said last-mentioned disk in position upon the disk upon which it is supported, and means rotatably mounted between said disks for rupturing said sealing medium, and extensions on the rupturing means of said sealing medium for embracing the defining edge of the adjacent end of the container.

6. In a container, a sealing disk, a sealing medium upon the top of said disk for sealing said disk in the container to close the same, and means carried by said disk at diametrically opposite points thereon for rupturing the sealing medium and releasing the disk.

7. In a container, a sealing disk, a sealing medium upon the top of the disk for sealing said disk in the container to close the same, and means rigidly carried by the disk at diametrically opposite points thereon, for rupturing the sealing medium and releasing the disk.

JESSE E. ROACH.
HARRY C. LOHMAN.