Oct. 16, 1951 E. H. LESLIE 2,571,143

DESOLVENTIZING OF SOLVENT-EXTRACTED SOLID PARTICLES

Filed March 28, 1947 2 Sheets-Sheet 1

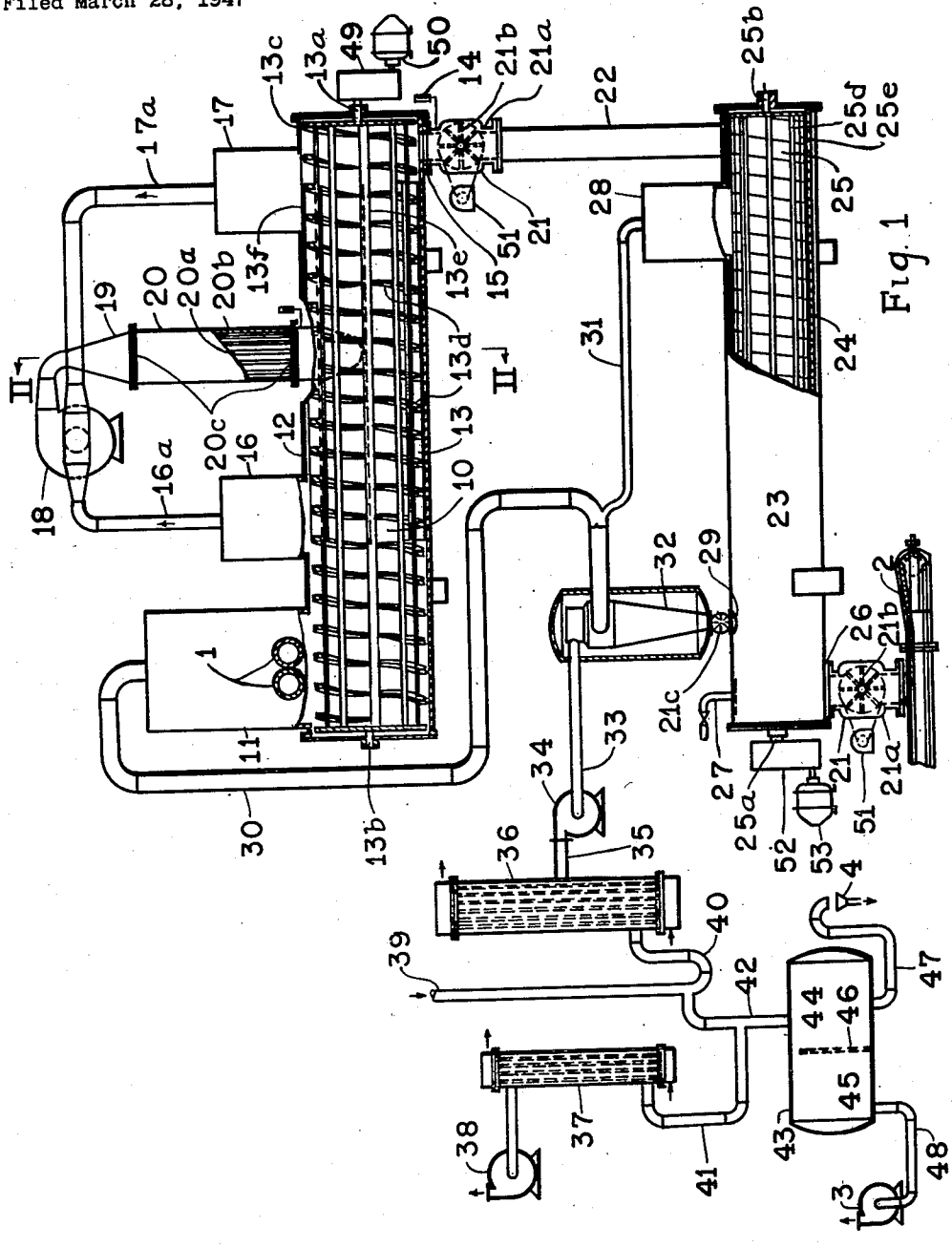

Fig. 1

INVENTOR.

EUGENE. H. LESLIE

BY Wm Henry Venable

his Attorney

Oct. 16, 1951 E. H. LESLIE 2,571,143

DESOLVENTIZING OF SOLVENT-EXTRACTED SOLID PARTICLES

Filed March 28, 1947 2 Sheets-Sheet 2

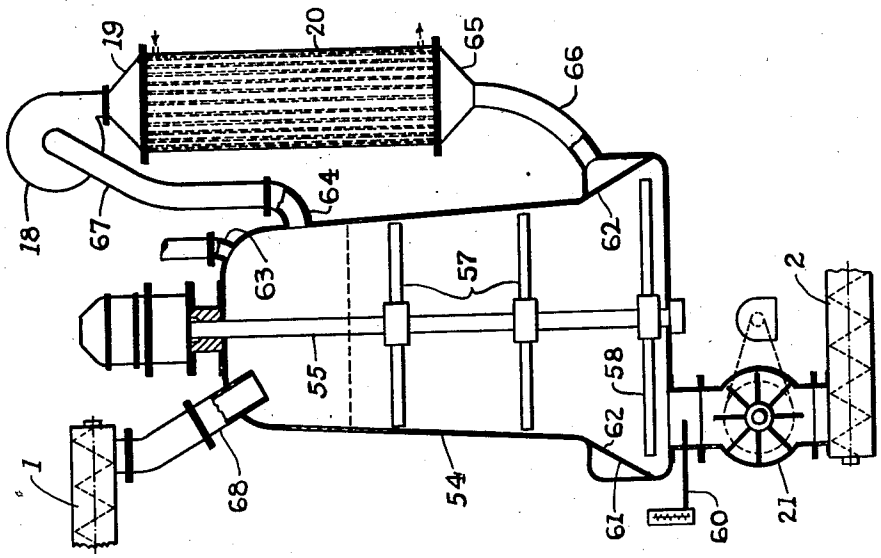

Fig 3

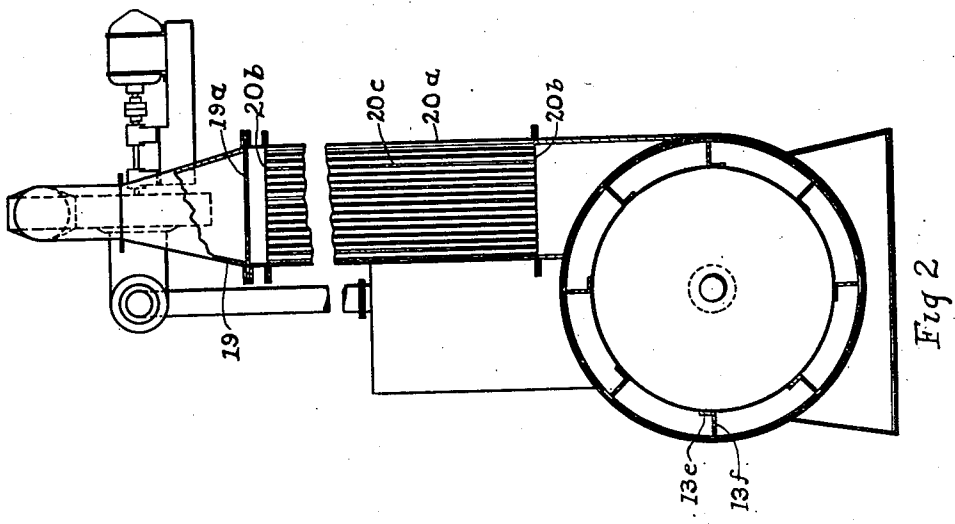

Fig 2

INVENTOR.
EUGENE H. LESLIE
BY Wm Henry Venable
his attorney

Patented Oct. 16, 1951 2,571,143

UNITED STATES PATENT OFFICE

2,571,143

DESOLVENTIZING OF SOLVENT-EXTRACTED SOLID PARTICLES

Eugene Hendricks Leslie, Ann Arbor, Mich.

Application March 28, 1947, Serial No. 737,915

3 Claims. (Cl. 34—182)

1

My invention relates generally to the art of using solvent to extract oils and fats from divided or granular organic solid materials containing them; and in particular to the treatment of the solids after extraction to recover solvent, which treatment is generally called desolventizing. In the extraction of oils from seeds, nuts and the like, desolventizing of the extracted residual solids is important not only to recover the solvent, but also to recover a marketable protein-containing material which is of improved quality when my method is followed and my apparatus is used. These may also be applied to extraction of animal oils and fats, as of marrow from crushed bones, fats from rendered animal materials, and in general to any similar extraction in which the solids treated are particles. My method may be adapted to suit the character of the materials to be processed, and it provides for considerable variation according to the fineness of particles, the uses for which they are intended, the nature of the solvent, and other factors. Similarly, my apparatus may be constructed in various forms, depending principally on the character of the solids and their strength, and whether violent agitation will affect them beneficially or adversely, or is immaterial.

Heretofore, it has been customary and deemed necessary to progress the solids to be desolventized over heated surfaces maintained at temperatures greatly exceeding the boiling temperature of the solvent, the solids remaining in contact with the hot surface for a substantial time interval. For example, in the desolventizing of soybean flakes and the like, it is customary to pass the flakes through a series of large tubes having annular concentric steam jackets maintained typically at a temperature of at least 290° F. and containing helical agitators rotating therein to move the flakes through the tubes. The time required for the passage of the solids through such a desolventizer is commonly five to ten minutes. Even when the heating is regulated to limit the final temperature of the material discharged from the tubes, a substantial portion of the particles is overheated for part of the treating time as a result of the prolonged contact with the hot metal surfaces. The effect of overheating, in the case of such a material as extracted soybean flakes, is partial denaturing of the protein in the desolventized material. This treatment requires, furthermore, the use of cumbersome equipment comprising several long jacketed cylindrical conveyors and connecting necks that are difficult to maintain, require frequent cleaning, and

2

are high in first cost. In the use of desolventizing equipment of this conventional type, it has been common to desolventize the solids only partially in this apparatus, and to discharge into a steam deodorizer, which usually follows the desolventizer, solids still containing substantial amounts of solvent, as for example in the neighborhood of 10% by weight. In this event solvent and water are interchanged in the particles and much difficulty has been experienced from the increased moisture content of the processed solids.

As the residual liquid solvent is removed from the solids, extreme fines and dust particles are freed from the mass and cause many difficulties in processing, due to their entrainment in vapors and gases and subsequent deposition on walls, tubes, paddles, etc. of vessels, condensers, and other processing apparatus. My method tends to obviate such difficulties and my apparatus is arranged to be substantially self-cleaning, and readily accessible for further periodic cleaning.

A major object of my invention is to recover the residual solvent from solvent-extracted protein-containing organic particles at relatively low temperatures and in a very short time.

Another object is to minimize difficulties in recovering the solvent vapors due to the dust particles therein.

Another object of my invention is improved control of moisture retained by the desolventized particles. Excessive moisture at any stage is particularly objectionable due to its physical effect on the character of the solid material, rendering it sticky or doughy rather than a free flowing and easily dispersed mass. At the same time, a substantial moisture content of controlled amount is often desirable, especially in connection with the further processing of the desolventized particles in preparing them for use as feeding supplements.

Another object of my invention is to provide improved apparatus for desolventizing which is compact, easily maintained, and economical to construct and operate.

The foregoing object and other objects and advantages will be apparent from the following description of my method and apparatus.

According to my method, the extracted solid particles are passed continuously through a treating zone in contact with vapors evolved from the particles, the vapors being continuously withdrawn from the zone, superheated, and returned thereto, and a portion of the vapors from which the superheat has been substantially used is continuously removed, condensed, and recovered in

liquid form for reuse in the extraction of more solids. The flow of vapor with respect to the solid particles may be co-current or countercurrent, there being certain advantages characteristic of each flow; and one form of my apparatus provides for both types of flow in novel and advantageous manner. Heating of the vapors is regulated to maintain a temperature of solids delivered from the zone only slightly higher than the boiling point of the solvent. These vapors, thus having only sufficient sensible heat to supply the latent heat to evaporate the solvent contained in the solids, cool quickly in the contacting zone without raising the temperature of the solid particles appreciably.

Ordinarily, the vapors recirculated consist chiefly of solvent vapor and water vapor, the latter being present because it is usually a component of the solids prior to solvent extraction. The vapor pressure of the water in the solids is, however, appreciably depressed by its presence in the solid phase. This does not appear to be true of the solvent, at least to a noticeable extent. The result is that the vapor removed from the solids is not of the azeotropic composition which it would have in the absence of the solid phase; but the evaporation nevertheless does occur at a temperature somewhat lower than the boiling point of pure solvent. The composition of the atmosphere in the treating zone of my method may be modified by addition of other vapors or gases to those evolved from the solids, which addition may be desired for various reasons, as for example, to lower the temperature of effective evaporation or to control the residual moisture content of the desolventized product. The former may be effected by addition of an inert gas, the latter by addition of steam.

My apparatus broadly comprises an envelope confining a constant volume of vapor and enclosing therein vapor heating, solids-vapor contacting, and vapor-propelling elements; the envelope having a solids inlet, a solids outlet, and a vapor outlet communicating with a condenser, and including means for separating solids from the vapors passing to the vapor outlet. Various means may be provided for progressing solids through the contacting portion of the envelope, which may, and in a preferred form of my apparatus does, effect intimate mingling of the solid particles with the circulating heated vapor.

As was previously mentioned, the continuous contacting of particles with vapor may be counter-current or concurrent or a combination of the two. An advantage of concurrent flow is that the hottest vapor contacts the particles containing the most solvent, which provides the highest degree of protection against overheating of the particles. Advantages of counter-current flow reside in the greater vapor temperature drop available for heat exchange, and in the cleansing action of the liquid-wetted particles on the dust laden vapors. In a preferred practice of my method and as provided particularly by a preferred embodiment of my apparatus, the superheated vapors are introduced at an intermediate point along the path of the particles, and passed in circuits in both directions, in substantially equal parts; and the net evolved vapor is removed from the solids inlet point of the desolventizer. By this means, the vapor passes through solvent wetted particles as it flows towards the outlet, and a substantial amount of entrained dust is removed thereby. The particles being treated contain substantially half of their original liquid solvent when they arrive at the hottest vapor zone, and the probability that any dry particles arrive there is extremely remote, and concurrent flow thereafter towards the solids outlet effects a rapid drop in vapor temperature which effectively insures against subsequent overheating of the particles. At the same time, advantage is taken of the greatest temperature drop of a substantial portion of the vapor, and the net evolved vapor is delivered at approximately saturation temperature, providing excellent thermal economy of operation.

One form of my apparatus I prefer for desolventizing solvent extracted vegetable minerals comprising relatively coarse solid particles high in protein of which flaked soybeans is typical. These particles are rather fragile flakes, containing only a limited amount of dust. It is essential that they be gently handled to preserve their coarse structure, and to avoid excessive formation of dust and fine particles. It is also beneficial to avoid heating these flakes excessively, to prevent undesired denaturing of the protein and other possible adverse chemical and physical changes. As this embodiment is an excellent illustration of one important application of my invention, I will describe it rather fully as applied in the art of extracting the oil from soybeans with hexane.

The beans are prepared for extraction in the usual manner by cracking the beans and conditioning the cracked beans as to temperature and water content and flaking the conditioned pieces between rolls. The flakes are then contacted with solvent in any desired manner. A suitable and preferred extractor is the basket-type in which the material is carried through a fixed circuit in baskets having perforated bottoms, the solvent deluging the baskets in transit and continuously draining through the flakes. After final drainage at the end of the circuit the extracted flakes are discharged from the baskets into an enclosed conveyor, which moves the solvent-wet flakes to the inlet of the desolventizer. The conveyor casing provides a fluid conduit for solvent vapor which is maintained under slight suction by the fans presently to be mentioned. The desolventizer is a cylindrical vessel lying generally horizontally and containing a slowly rotating agitator which moves the flakes longitudinally and causes a gentle cascade of the particles as they pass through a heating zone in the vessel in transit towards the opposite or discharge end of the vessel. A fan withdraws solvent vapor from the desolventizer and circulates it through a heater and back again to the desolventizer in the zone where material is cascaded through the vapors by the agitator. The circulating superheated vapor drives off more solvent from the material, this evolution occurring chiefly in the region of the apparatus close to the hot vapor inlet, at which point a high-temperature zone prevails in the vapor, the temperature in the remainder of the apparatus being substantially lower. Heating of the vapors is controlled to maintain a substantially constant temperature at the solids discharge outlet, preferably slightly above the boiling point of the solvent. A thermometer or temperature controller is provided near the solids outlet for this purpose. The vapor evaporated from the flakes is withdrawn through a thermally jacketed dust separator and fan to a condenser. The material is transferred from the desolventizer by means of a vane feeder or rotary vane lock for further treatment to a deodorizer, which is a horizontal cylindrical vessel having heated

walls and a rotating agitator, in which the material is contacted with steam. Here the last trace of solvent is removed, along with undesirable volatile components of the flakes adversely affecting their aroma and taste. The completely desolventized and deodorized material is discharged through a second vane feeder to a conveyor which removes it to a further treating apparatus or for other disposal, and the steam and solvent vapors are cleaned and condensed, conveniently by the same dust separator, fan and condenser provided for the desolventizer vapors. It has been customary to waste fines separated from solvent vapor, but in my method they may be recovered, preferably by returning them to the particle stream near the solids discharge end of the deodorizer, where the vapor velocity is low and the path to the solenoids outlet is relatively short.

Concerning the factors which are important in the carrying out of my method and the construction of my apparatus, the temperature to which the circulating atmosphere is heated in the vapor heater may be any conveniently attainable by use of heating steam; the amount of vapor recirculated must be sufficient to afford, as sensible heat, enough heat to evaporate the solvent from the flakes; the velocity of vapor in contact with the particles should be low, preferably below 120 feet per minute, and the vapor velocity in the heater should be relatively high to favor rapid heat exchange. Conveniently, the heater is a heat interchanger supplied with steam commonly available in extraction plants in the neighborhood of 100 lbs. per sq. inch, which permits heating the recirculating vapors to about 300° F. Commercial hexane is an excellent solvent, quite generally used, having a boiling range between 140° F. and 160° F., a latent heat of vaporization at 150° F. of about 144 B. t. u. per lb., and an average specific heat of vapor between 300° F. and 150° F. of about 0.45 B. t. u. per lb. per F°. It consists principally of pure hexane boiling at approximately 150° F. Excluding the effects of other components in the atmosphere such as steam and inert gases, and assuming the vapors are superheated to about 300° F., about three pounds of hexane vapor should be circulated through the fan and heater for each pound of liquid solvent evaporated. This rate of circulation may be varied within practical limits, and between two to four pounds of vapor circulated to the superheater per pound of vapor evaporated is a preferred range. Another factor, however, is of the greatest importance, namely maintaining a maximum flake temperature at or below 165° F. I have discovered that by desolventizing protein-containing solvent extracted particles with heat while maintaining a flake temperature below about 165° F., a much improved product is obtained which heretofore could not be produced commercially. This product is lighter in color and yields more protein on protein extraction than does the same original material desolventized according to prevailing practice.

The limitation to 120 feet per minute velocity for vapor flowing in contact with the particles is particularly important to avoid blow-back of particles in counter-current treatment, and in both concurrent and counter-current contacting, to prevent excessive entrainment of particles in the vapors circulated through the heater; but higher velocities are contemplated in certain instances of concurrent treatment where centrifugal separation of vapor and particles is interposed between the contacting and heating steps, and my method and apparatus are not limited in all embodiments to any particular maximum vapor velocity.

In connection with the maximum flake temperature, it should be noted that while various known expedients may be employed to limit or lower the temperature of the flakes during the desolventizing process, such as employing unusually low-boiling solvents for extraction, desolventizing under vacuum, and the like, such expedients are undesirable for the most part, for reasons obvious to those skilled in the art; and my method provides inherently a protection against flake overheating which renders such expedients unnecessary. As the flakes are cascaded through the superheated vapors delivered from the heater, their maximum temperature is limited to the solvent boiling point so long as evaporation proceeds, and may be somewhat lower due either to concurrent evaporation of water from the flakes or to the presence of some inert gas. A very large surface of contact is presented by the particles and the vapors are quickly cooled to a temperature approaching the saturation temperature, unless they have been excessively superheated, so that flakes as they are desolventized pass quickly into a low temperature zone. Hence a simple control of heat supplied to the vapor heater, regulating the supply to be just sufficient for evaporating the solvent, or but slightly in excess of this requirement, effectively determine the maximum temperature to which the flakes are heated in my apparatus and according to my method; and I preferably control the admission of steam to this heater in accordance with the temperature of the outgoing meal, so as to maintain this temperature at or below 165° F. In case a solvent for extraction is selected which has higher boiling point than hexane, as for example commercial heptane having a boiling range of 177° F. to 233° F. or in case a material temperature lower than or approaching the boiling temperature of hexane or other solvent is desired as the control level, an inert gas such as nitrogen or carbon dioxide may be introduced into the desolventizer to reduce the partial pressure of the solvent and effect a saturation temperature in the evaporating zone lower than the solvent boiling point and somewhat lower than the control temperature selected for the maximum temperature of the flakes being desolventized.

Steam is an excellent direct heating medium but when it is used as the principal vapor contacting the solids containing solvent of lower boiling point than water, rapid exchange of liquid water for liquid solvent occurs in the solids which increases the moisture content. The physical characteristics of the solids may be radically affected by this, there being locally produced doughy masses, which causes severe material handling difficulties when steam is used for desolventizing, even when the total available heat is sufficient to, and eventually does, subsequently reduce the moisture content of the material to a lower value. In my process, some steam can advantageously be admitted to the desolventizer to modify the proportional atmosphere of solvent and water vapors, which in equilibrium with the material establishes or regulates the moisture content at some desired determinable value; or the use of added steam can be deferred until the deodorizing step, when the solvent content of the solids or flakes is low and the exchange of water for solvent does not result in excessively

moistening the particles. I prefer in any case to reduce the solvent content of the solids to 4% or less before treating the flakes in the deodorizer where steam is the principal atmosphere. The deodorizer is jacketed so as to have heated inside walls, providing an extensive heating surface or heat source other than the steam inside the deodorizer, so that the system is flexible and can be used to decrease or increase the moisture content of the flakes as desired. Dry steam is continuously passed through the deodorizer in contact with the flakes, which effectively removes all residual solvent and volatile odoriferous components. The vapor velocity in the deodorizer is quite low and entrainment of dust in the vapors is but slight.

Vapors are withdrawn from the desolventizer and deodorizer, combined, and passed through a heated dust separator, preferably of the centrifugal type, under suction of a fan which thence delivers them to suitable condensers in which solvent and water are liquified and removed. Any vapors not condensed in this manner are delivered to a vent condenser, under suction from a fan, which cools the gases passing through it to a temperature sufficiently low to discharge substantially solvent-free non-condensible gases to the atmosphere. The fan does sufficient work on the gases and vapors to overcome the friction through the condensers and dust separator and to maintain a slight vacuum on the extractor, so that proper direction of flow of vapors and gases is insured through the system.

Condensate, consisting of solvent and water, drains to a decanter in which these liquids are separated. Solvent is returned to the extractor and the water is discharged to a sewer, usually after being boiled to render it solvent free.

In the desolventizer described above, mechanical means is employed to gently disperse the particles in the heated atmosphere and to progress them through the treating zone. My method and apparatus, however, are not necessarily limited to the use of this expedient. Nor are they limited only to processes in which the particles are subsequently deodorized with steam. For example, it is within the contemplation of my method and apparatus to arrange the desolventizer vertically and pass the solids therethrough from the top to the bottom, under the action of gravity. Vapors evolved from the particles in this case are removed at or near the top of the vertical desolventizer, passed through the heater, and returned at or near the bottom to rise through the particles countercurrent to their descent. Such apparatus may be of large volume, and the flow of vapor and particles may be adjusted to effect desolventizing as the solids fall freely through the vapor atmosphere, or the solids may be retarded to form a slowly flowing bed or mass through which the superheated vapor is passed. Suitable provision is made, of course, to separate solids particles from vapors diverted to the heater and the net evaporated vapors discharged to the condensers. The particles may or may not be deodorized after leaving the bottom of the apparatus, depending, of course, on whether such subsequent treatment is desired.

My method will be more perfectly understood and novel features of my apparatus more particularly explained, in the following description with reference to the accompanying drawings in which

Fig. 1 shows diagrammatically one example of my complete desolventizing and deodorizing system, certain apparatus being indicated in elevation and partially in section;

Fig. 2 shows a longitudinal sectional elevation of the desolventizer in greater detail, on the line II—II of Fig. 1; and

Fig. 3 shows diagrammatically another example of my desolventizing system.

Referring first to Fig. 1, drained extracted flakes to be desolventized are delivered continuously to my treating system from the enclosure of a suitable extractor (not shown) through conveyor casings 1, two of which are indicated side by side and may conveniently be screw conveyors. Desolventized flakes finally leaves my system through conveyor 2, which may be of any convenient type. Recovered solvent is delivered by the pump 3 and waste liquor is discharged to the sewer 4. These elements generally define the terminal points of my system.

The discharge ends of the casings of feed screws 1 enter the desolventizer 10 through a lateral wall in a dome 11 near one end, being sealed therein to prevent leakage of vapor. The desolventizer 10 has an insulated cylindrical casing 12, extending generally horizontally and containing a rotor 13 which sweeps the walls of the casing and is arranged to progress the particles towards the outlet nozzle 15. A thermometer or other temperature responsive device 14 is provided near this outlet nozzle. Vapor is withdrawn from intermediate steam-jacketed domes 16 and 17 through steam-jacketed ducts 16*a* and 17*a* to the suction inlet of a fan 18, which discharges through a flaring transition passage 19 and the vertical tubes of the heater 20 back into the casing 12. The tubes 20*a* of the heater extend between tube sheets 20*b* at opposite ends of the shell 20c. The shell is supplied with heating steam, which surrounds the tubes. It will be apparent that the superheated vapor from the heater 20 divides and passes in opposite directions to the domes 16 and 17, providing two circuits for the vapor, one countercurrent and the other concurrent with the particles. This is a preferred arrangement, particularly for desolventizers of the larger sizes and capacity; but in smaller sizes, the dome 17 and conduit 17*a* may be omitted, eliminating the concurrent circuit. In the single counter-current circuit arrangement (dome 17 and conduit 17*a* being omitted) the duct 16*a* will be substantially larger as the entire recirculating flow passes through it. Where, however, two domes 16 and 17 delivering vapor to the same heater 20 are used, the flow through ducts 16*a* and 17*a* is preferably made unequal, so as to effect substantially equal vapor flow within the desolventizer from the heater outlet in opposite directions. Where hexane is the solvent, this requires maintaining the flow through duct 17*a* approximately twice that in duct 16*a*; and Fig. 1 shows duct 16*a* of smaller size than 17*a* for this reason. Flakes from the desolventizer outlet 15 are transferred through vane feeder 21 and duct 22 to one end of a lower vessel 23 generally described as a deodorizer. This consists of a generally horizontal steam-jacketed cylindrical casing 24 containing a rotor 25 which sweeps the inside wall to pass the material towards the outlet nozzle 26, and having a stream inlet 27, vapor outlet dome 28, and dust return inlet 29. From the outlet nozzle 26 the particles are transferred through a second vane feeder 21 to the discharge conveyor 2.

A vapor outlet-dome 11 is provided in the top

of the desolventizer 10 at the solids inlet end, from which the evaporated solvent and water evolved by heating the flakes is removed. These and the vapors from dome 28 of the deodorizer are withdrawn through steam jacketed ducts 30 and 31 respectively and passed to the jacketed centrifugal dust separator 32. Solids removed from vapors in the dust separator are returned to the deodorizer by a vane feeder 21c. The dust separator 32 is connected by jacketed duct 33 to the suction side of a fan 34, which fan discharges to a condenser inlet duct 35. The net delivery of released vapor from duct 35 enters a condenser 36. Non-condensibles and a slight trace of lower-boiling solvent pass from condenser 36 to a supplementary vent condenser 37 which is exhausted and maintained under low pressure by the fan 38. Other apparatus in the extraction plant is also vented through condenser 37, pipe branch 39 indicating a conduit from such sources of vapor.

It will be understood that all vapor ducts and conduits, domes 11, 16, and 17 of the desolventizer, the dust collector, and in general apparatus through which dust-laden vapors pass, are preferably steam-jacketed to prevent solvent condensation. The dust carried by the vapors accumulates at wet spots, forming obstructions which interfere with operation of the apparatus. Jacketing or other heating means applied to walls in contact with the vapors effectively cures this difficulty. The use of jacketing is well known for this purpose and is mentioned here only as a precaution which is significant in the successful application of my method and use of my apparatus.

Liquid recovered in the condensers 36 and 37 drains through pipes 40, 41, and 42 to a decanter 43. This is a tank divided into two compartments 44 and 45 by separating bulkhead or weir 46. Pipe 42 discharges into compartment 44, in which the water and other heavy substances settle to the bottom and are withdrawn through overflow 47 to the sewer 4. Means for boiling the waste water are not shown for simplicity of the drawing, but it is understood that such means, well known to the art, are ordinarily provided. Solvent floats on top of the water and overflows into chamber 45, from which it is withdrawn through pipe 48 and pump 3. This specific portion of my system is an illustration of the step of separating recovered solvent from water and may be followed exactly where the solvent is lighter than, and immiscible with water. Where the solvent is miscible with water, or heavier than water, suitable modifications well known in the art may be made to my system to provide this separation. The particular illustration is selected because most oil and fat extraction with solvent uses solvents lighter than and immiscible with water.

Returning now again to the desolventizing vessel, it will be observed that two vapor removal domes 16 and 17 are shown, spaced longitudinally on the top of the casing on opposite sides of the vapor heater 20, the center of which, however, is offset from the centers of the domes. The ducts 16a and 17a are made as short as possible to form a continuous passage which connect, near its center, directly to the suction inlet of the fan 18. The fan rotor and heater 20 have their centers in the same vertical plane, the fan being closely adjacent to the heater 20 and inlet transition 19, discharging thereinto as directly as possible. This arrangement is extremely compact and permits ducts of the shortest possible length, which is important in conserving heat and preventing chilled spots in the ducts which cause deposition of dust particles and obstruction of the passages Furthermore, the heated vapors divide in the desolventizer and flow therethrough in opposite directions, with half the velocity that is required where the flow is undirectional, and providing the additional advantages of counter-current and concurrent contacting in sequence previously pointed out. At the same time, vapors flow through the heating tubes 20a at relatively high velocity, a condition favoring a high rate of heat transfer and permitting apparatus of economical size.

A removable screen tray 19a is provided at the lower end of the transition cone 19. The screen effectively catches any large agglomerations of dust particles which may have been formed at cool spots in the ducts and passed through the fan, preventing their falling on the tube sheets and fouling the tubes. The ducts 16a and 17a are preferably steam-jacketed to prevent such cool spots. The screen may be taken out periodically for cleaning. It is best shown in Fig. 2.

The rotor 13 which turns within the desolventizer is arranged to pass the solid particles from the inlet end towards the discharge end, and, in the zone under the outlet from the heater 20, to lift and cascade the particles through the circulating heated atmosphere. The rotor has stub shafts 13a and 13b journalled in the opposite ends of the desolventizer, the shaft 13a being driven through transmission 49 by the motor 50. Affixed to the inside ends of shafts 13a and 13b are torque discs 13c having a diameter slightly less than the inside diameter of the desolventizer casing 12. Between the discs 13c at their circumference, extend helical ribbons 13d and longitudinal bars 13e. The ribbons, as they rotate, pass the solid particles towards the desolventizer outlet. The bars 13e have flat rectangular sections generally perpendicular to radii through the axis of the rotor so as to tie together successive turns of the helical ribbon throughout the length of the rotor, stiffening it mechanically; and in addition, in the zone between the vapor domes 16 and 17, the bars 13e have flanges 13f extending radially between adjacent turns of the helix providing lifting paddles which scoop up the solid particles from the bottom of the desolventizer, and as they turn drop the particles causing them to fall through the vapor. This embodiment of my invention thus includes means for progressing the particles longitudinally, exemplified in this instance by the helical ribbons of the rotor, and means for dispersing the solid particles in the heated vapor atmosphere.

Three principal zones are characteristic of the foregoing example of my desolventizer; a heating zone between the vapor domes 16 and 17 in which the highest vapor velocity (preferably about 120 feet per minute or less) is maintained and the flakes are cascaded through the moving vapors in intimate contact therewith; a settling zone from the outlet dome 11 extending longitudinally to the heating zone, through which outgoing vapors only pass (in case of hexane at a velocity about one-half of that of the heating vapors, or less than 60 feet per minute) countercurrent to solvent-wetted particles which de-superheat the vapors and catch and remove a portion of the entrained dust; and a settling zone disposed vertically within the dome 11 itself, out of con-

tact with particles. This arrangement is even more effective when only one vapor dome 16 is provided instead of two, since the ratio of vapor velocities in the heating and settling zones respectively is then greatly increased, being, in case of hexane vapors, substantially four to one instead of two to one. It will be apparent that this construction provides for minimum entrainment of dust by the solvent vapors, and further for appreciable elimination of much of the dust entrained before the vapors are discharged from the desolventizer.

The vane feeders 21 which control the admittance of flakes to the deodorizer 23 and discharge of flakes therefrom are of well known construction. They each consist of a horizontally cylindrical casing 21*a* closed at the ends and having inlet and outlet passages at the top and the bottom. Within the casing turns a vaned rotor 21*b*, the vanes dividing it into radial segments. The rotor does not fit tightly in the casing, but baffles the passage for particles to obstruct intermingling and dispersion of the diverse atmospheres on opposite sides of the rotor. Undesired net flow of vapors and gases through the feeder is prevented or controlled by balancing pressures in the various units of the apparatus. It is generally preferable that the pressures be substantially equalized across the feeder at the desolventizer inlet and outlet. The rotor 21*b* may be driven at suitable speed by any convenient means, as by an electrical motor and transmission indicated at 51.

Particles leaving the desolventizer 10 ordinarily still contains a trace of residual solvent which is finally removed by steam treatment in the deodorizer 23. This vessel is a generally horizontal cylinder having a double-walled casing 24 which provides a jacket for heating steam, to impart heat to the particles as well as to avoid cool spots favorable to deposition of solids entrained in the vapor atmosphere, and thus prevent undesired condensation of water vapor. Saturated or slightly superheated process steam is admitted at steam inlet 27 and withdrawn at outlet 28. The rotor 25 is generally similar to the rotor 13 of the desolventizer previously described, being constructed with stub shafts 25*a* and 25*b*, torque discs 25*c*, helical conveying ribbon 25*d*, and bars 25*e*. Shafts 25*a* and 25*b* are journalled to turn in bearings in the heads of the desolventizer casing 24 and shaft 25*a* is driven through a transmission 52 by motor 53. The solids inlet duct 22 and steam inlet 27 are at opposite ends of the deodorizer, providing counter-current flow of vapor and flakes between the outlets 26 and 28 for flakes and vapor respectively.

Fig. 3 illustrates a modified form of my apparatus with the desolventizer arranged vertically, in which the solids are progressed principally by gravity. The particles to be desolventized are delivered by a screw conveyor 1 through nozzle 68 of the desolventizing vessel 54 at the top thereof. This vessel is preferably in form of a truncated cone, being circular in section and slightly larger at the bottom than the top, to prevent hanging up of the particles on the lateral surfaces. A vertical shaft 55 extends axially of the vessel, being driven to rotate at slow speed by the geared motor 56. Mounted on the shaft are radial arms 57 and 58, which gently agitate the solid contents of the vessel. The lowermost arms 58 sweep the particles into the discharge nozzle 59, whence they are passed by vane feeder 21 to discharge conveyor 2. A thermometer 60 may be conveniently located in the nozzle 59.

A manifold 61 girdles the bottom of the vessel 54, having a plurality of vapor openings 62 for discharge of superheated vapor. An outlet 63 for recovered solvent vapor is provided in the top of the vessel. A second outlet 64 is connected by a duct 67 to the suction side of a fan 18. The vessel preferably is not filled completely with solids, but a substantial vapor space is left below the opening 63 for gravity separation of entrained solids from the vapor. The fan 18 blows the vapor at a controlled rate through transition cone 19, heater 20, funnel 65, and duct 66 to the manifold 61. The net vapor evolved from outlet 63 is delivered to condensing and decanting apparatus, not shown in Fig. 3, but which may be substantially the same as condensers 36 and 37 and decanter 43 of Fig. 1. Parts numbered with the same reference numerals shown on Fig. 1 and described in connection therewith, are of essentially the same construction in this example, illustrated by Fig. 3, and further description of them need not here be made. If the solids to be processed are fine or dusty in character, a dust collector such as 32 previously described may be interposed between the vapor outlet 67 and the condensing apparatus, substantially as shown in Fig. 1.

Superheated vapors entering through the openings 62 rise through the agitated mass of particles and rapidly become saturated with evaporated solvent and water, cooling rapidly to saturation temperature. Mild agitation of the solids by the paddles 94 tends to prevent channeling and to insure thorough desolventizing of the particles.

Although I have illustrated and described but two embodiments and a preferred practice of my invention, it will be recognized that changes in details of construction disclosed and variations in the application of my method may be made without departing from the spirit of my invention or the scope of the appended claims.

I claim:

1. In apparatus for removing solvent from solvent-containing solid particles, in combination, an elongated casing forming a chamber having an entrance and an exit spaced therealong for said solid particles, a recirculation duct having its respective ends connected to said casing and opening thereinto at generally longitudinally spaced points, means for moving vapors through said recirculation duct, means for varying the temperature of said vapors in the course of their passage through said recirculation duct, movable means within said casing to move said solid particles between said entrance and said exit and to cascade said solid particles through the space within said casing generally between the respective ends of said recirculation duct, and an outlet duct for net evolved vapors connected to said casing nearer one end of said casing relative to the ends of said recirculation duct.

2. In apparatus for removing solvent from solvent-containing solid particles, in combination, an elongated casing forming a chamber having an entrance and an exit spaced therealong for said solid particles, a rotor within said casing to move said solid particles between said entrance and exit, an outlet duct for net evolved vapors connected to said casing adjacent said entrance, a recirculation duct having its respective ends connected to said casing and opening thereinto at generally longitudinally spaced points, the

ends of said recirculation duct being positioned toward said exit relative to said outlet duct, fan and heater means respectively connected in the circuit of said recirculation duct, a lifting member to cascade said solid particles through the space within said casing generally between the respective ends of said recirculation duct, and means for feeding said solid particles into said casing, said last-mentioned means having its discharge end generally positioned adjacent said outlet duct.

3. In apparatus for removing solvent from solvent-containing solid particles, in combination, an elongated generally horizontal casing forming a chamber having an entrance and an exit respectively adjacent the ends of said chamber for said solid particles, a rotor within said casing to progress said solid particles between said entrance and said exit, lifting flanges along at least a portion of said rotor, an outlet duct for net evolved vapors connected to said casing at said entrance end, a recirculation duct having three legs, said legs having their respective ends connected to said casing and opening thereinto at generally longitudinally spaced points, all of said respective ends of said recirculation duct being positioned toward said exit relative to said outlet duct, fan and heater means respectively connected in the circuit of the intermediate leg of said recirculation duct, and means for feeding said solid particles into said casing, said last-

mentioned means having its discharge end generally positioned adjacent said outlet duct in the path of vapors entering said outlet duct from said casing.

EUGENE HENDRICKS LESLIE.

REFERENCES CITED

The following references are of record in the file of this patent:

UNITED STATES PATENTS

Number	Name	Date
100,235	Sturtevant	Feb. 22, 1870
309,485	Munzinger	Dec. 16, 1884
1,059,820	Besemfelder	Apr. 22, 1913
1,460,519	Wadsworth	July 3, 1923
1,515,596	Harris	Nov. 18, 1924
1,543,073	Fiege	June 23, 1925
1,704,482	Lindsay	Mar. 5, 1929
1,737,533	Chapman	Nov. 26, 1929
1,862,945	Schlotterhose	June 14, 1932
1,994,220	Hormel	Mar. 12, 1935
2,119,261	Andrews	May 31, 1938
2,189,120	Ahlmann	Feb. 6, 1940
2,283,858	Kuerner	May 19, 1942
2,311,824	Gautreau	Feb. 23, 1943
2,321,893	Bimpson et al.	June 15, 1943
2,334,015	Levine et al.	Nov. 9, 1943
2,363,037	Arnold	Nov. 21, 1944
2,451,316	Bieber	Oct. 12, 1948

Certificate of Correction

Patent No. 2,571,143 October 16, 1951

EUGENE HENDRICKS LESLIE

It is hereby certified that error appears in the printed specification of the above numbered patent requiring correction as follows:

Column 4, line 13, for "minerals" read *materials*; column 5, line 18, for "solenoids" read *solids*; column 6, line 32, for "determine" read *determines*; line 38, for "th s" read *this*; column 7, line 33, for "through" read *throughout*; column 8, line 70, for "stream" read *steam*; column 9, lines 69 and 70, for "connect" read *connects*; column 10, line 5, after "passages" insert a period; and that the said Letters Patent should be read as corrected above, so that the same may conform to the record of the case in the Patent Office.

Signed and sealed this 5th day of February, A. D. 1952.

[SEAL]

THOMAS F. MURPHY,
Assistant Commissioner of Patents.