May 10, 1938.

R. W. GOETZ

2,116,886

FLOOR JOIST

Filed Dec. 24, 1936

Fig. I.

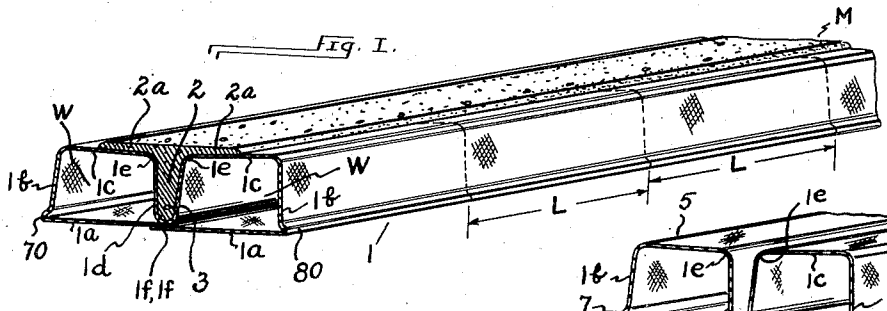

Fig. II.

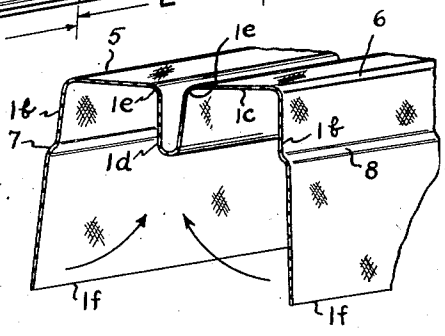

Fig. Ia.

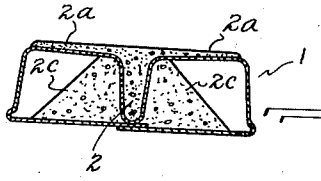

Fig. III.

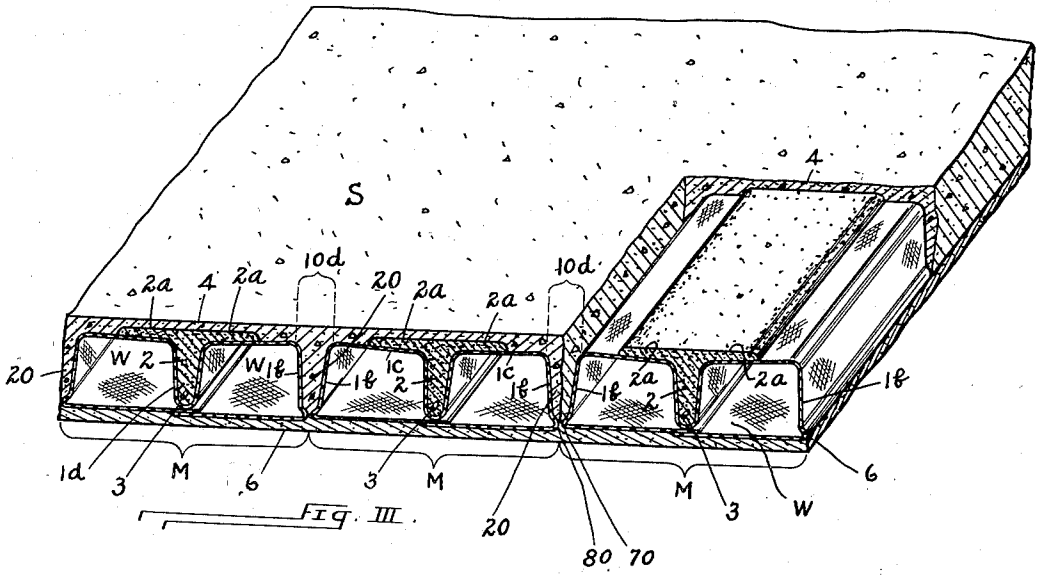

INVENTOR

Rowland W. Goetz

BY Christy and Wharton

ATTORNEYS

Patented May 10, 1938

2,116,886

UNITED STATES PATENT OFFICE

2,116,886

FLOOR JOIST

Rowland W. Goetz, Mount Lebanon, Pa.

Application December 24, 1936, Serial No. 117,505

5 Claims. (Cl. 72—66)

My invention relates to building construction, and consists in a structural member formed principally of sheet metal and concrete. The structural member may be employed in the construction of walls, partitions, and roofs, and is particularly adapted for the construction of floors. In the following specification, a consideration of this particular adaptation will afford to those skilled in the art a clear understanding of the wider field of application which is within the ambit of the invention.

The object of the invention is to reduce the cost of buildings, particularly homes. I aim to provide a fire-proof building in which the labor of erection is reduced to a minimum, and in which the required strength and durability are obtained in a construction of relatively light weight. Other objects will present themselves in the ensuing description.

In the accompanying drawing Fig. I is a fragmentary, isometric view of a structural member embodying the invention; Fig. Ia is a view in end elevation of the member, illustrating certain modifications in detail; Fig. II is a fragmentary, isometric view of the sheet metal body portion of the member in course of fabrication; and Fig. III is an isometric view of a section of flooring, constructed of the structural members of the invention.

Referring to the drawing, my structural member M consists in an elongate, tubular body 1 including a concrete joist or beam 2. The tubular body is fashioned of expanded sheet steel, and, as shown in Fig. I, is of general rectangular shape in cross section. Side walls 1b extend upward from the opposite edges of the flat bottom wall 1a of the body 1, and the top wall 1c is medially depressed, forming a channel 1d that divides the body from one end to the other into two ducts or ways W. In this channel a filler of concrete is cast and hardened, providing the beam or joist 2. Conveniently, a metal reinforcing rod 3 is embodied in the concrete, to increase the tensile strength of the cast joist.

Advantageously, the joist 2 is of specialized shape in cross-section. In this case the filler of concrete is laterally extended from the channel 1d, that is, the concrete is laterally extended over the top wall of the body 1, in such manner as to provide a joist (2, 2a, 2a) of T-section. The two portions 1c, 1c of the top wall of the body 1 slope downward from the horizontal toward the central channel 1d, and merge on small arcs 1e with the vertical side walls of such channel, whereby the cast beam is of relatively great strength in the region of mergence of the two flanges 2a, 2a with the stem 2 of the T. (Manifestly, by modification in detail, the beam 2 may take the form of other structural beam sections.)

With the aid of suitable forms, jigs, and presses, the body 1 is fashioned of two or more elongate sheets of metal secured along their meeting edges, or of single sheet, as illustrated in Fig. II. In shaping the sheet metal, the central channel 1d is first formed; next, the sheet is folded downward on opposite sides, forming round corners 5 and 6 which are equispaced from and parallel to the mouth of said channel, and then the downwardly extending limbs of the sheet are folded inward on lines 7 and 8, as indicated by the arrows in Fig. II, and the edges 1f, 1f of the sheet are secured in overlapping position against the bottom of the channel 1d, as indicated in Fig. I. Rivets, or tie-wires, or other known fastening means, may be employed in securing the overlapping edges of the sheet in such position. Concrete is then cast into the channel 1d and molded upon the upper wall 1c, 1c of the sheet metal body, forming the integral T beam 2, 2a, 2a, described above.

The shaping of the sheet metal, and the casting and molding of the concrete beam or joist, will ordinarily be completed in the shop, but it is contemplated that the fabrication of my structural member may be performed, either partially or entirely, in the field. In some cases, I will leave the overlapping edges 1f, 1f of the sheet free, until after the structural member (M) has been assembled in a unit of construction, whereby, for reasons presently to appear, the bottom flaps (1a) of sheet metal may be swung aside and access obtained to regions W, W within.

In accordance with the invention the sheet metal of which the body 1 is formed is expanded sheet metal of well-known sort, including within its body a myriad of recesses or holes, which in the casting and shaping of the beam 2, 2a, 2a are filled with concrete. The integration of the cast and hardened concrete with the sheet metal is thus rendered mechanically secure throughout the metal-engaged surfaces of the beam. The sheet metal walls of the body 1, indeed, provide metallic reinforcement for the beam, and, as will presently appear, it becomes possible to apply and secure plaster or concrete immediately to the top and bottom faces of the completed structural member M. In the use of such expanded metal, I obtain economy, strength, and durability in a structure of relatively light weight.

It may be remarked that I employ concrete of

a so-called dry mix. The aggregate of the concrete may consist of known particulate materials in which the average particle size equals, or exceeds to slight degree, the size of the openings in the expanded sheet metal. I have used haydite—a known aggregate formed of vitrified clay—with good results. Of course, the inner surfaces of the expanded sheet metal body 1 may be lined with paper (not shown, but a known expedient in the metal lathing art), to the end that a concrete of wet mix and finer aggregate may be used, without undue loss of concrete through openings in the sheet metal while the beam 2, 2*a*, 2*a* is being cast.

I shall now consider the manner in which a plurality of my structural member M is employed in the construction of a floor. The members are laid side by side, as illustrated in Fig. III, with the opposite ends of the members supported upon the foundation or frame elements of the building (not shown), in the same general manner that the floor beams of the usual building are supported. It will be observed that the side-walls 1*b*, 1*b* of the members M are inclined to the vertical, so as to provide open channels 10*d* between the adjacent members M in the assembly. Indeed, the lower corners 70 and 80 of the sheet metal bodies of the members M are so shaped that the channels 10*d* between the assembled members approximate the joist-defining channels 1*d* within the members.

The members M may be laid readily and quickly, and, when the desired assembly has been effected, concrete is cast and solidified in the channels 10*d*, thereby providing beams 20 that rigidly integrate and reinforce the assembled members.

The ends of the members M will not ordinarily abut the side wall of the building in which they are installed—an interval of one or more inches may be provided between the face of the wall and the ends of the members. In the casting of the beams 20 this interval is filled with concrete, providing greater strength and more secure integration of the members in the regions in which they are vertically supported.

As shown in Fig. III of the drawing, the concrete cast between the assembled members M may be in excess of the amount required to fill the channels 10*d*, so that the exposed portions of horizontal walls 1*c*, 1*c* and concrete flanges 2*a*, 2*a* shall lie within a monolithic layer 4 of concrete. The upper layer 4 of concrete may be smoothed and dressed, to provide a floor surface S of unbroken continuity and uniform finish. In such manner, a rigidly integrated and metallic reinforced concrete floor is provided, and the surface S may comprise the final floor surface, or it may carry another and more elaborate floor finishing.

If desired, wooden nailing strips or the like may in known way be embodied in the upper layer 4 of concrete, or in the tops of beams 2, 2*a*, 2*a* initially provided in the members M.

It is important to note that the horizontal bottom walls 1*a* of the assembled and integrated members M extend in common plane, and provide perfect support for a coating of plaster 6. Thus, the structure provides a sturdy floor; if the floor be for an upper room in a building, the lower surface of structure may be plastered, providing the ceiling for the room below.

It will be perceived that the regions W, W within the structural members M comprise fireproof ducts. In these ducts the electric wiring and pipe lines of the building may be housed.

As mentioned in the foregoing specification, the operlapping edges 1*f*, 1*f* of the sheet metal in individual members M may be left free, so that during the course of floor construction the basal flaps (1*a*) of the members M may be swung downward, to permit the introduction and assembly of wiring and plumbing. This matter of wiring and plumbing may be attended to either before or after the assembled members M have been integrated with the applied concrete 4, 20. After the wiring and plumbing has been installed, the edges 1*f*, 1*f* may be tied in position against the bases of channels 1*d*. The structure is then ready to receive the coating of plaster 6, as mentioned.

In Fig. I*a*, I illustrate that the flanges 2*a*, 2*a* of the concrete beam embodied in each structural member M may be laterally extended, to cover the entire upper surface of the sheet metal body 1.

Fig. I*a* is illustrative of another refinement. Advantageously, I provide means at the opposite ends of the cast beam 2, 2*a*, 2*a* for supporting the beam, and also the sheet metal body 1, against lateral tilting when the structure is first placed upon floor supports in the course of construction. Such means may consist, as here shown, in two vertical flanges 2*c*, 2*c* of concrete, two inches in thickness, more or less, and of the form in end elevation illustrated in Fig. I*a*.

While I contemplate that the sheet metal body or skeleton 1 of my structural member may be of uninterrupted continuity from end to end, it is important to note that, alternately, it may be formed in a plurality of sections L, as indicated in Fig. I. The sections L, being of relatively short length, are easier to manufacture, and the apparatus required for manufacture is simpler and less costly than otherwise would be the case. In constructing a member M of specified length, the required number of skeleton sections L are arranged in end to end alignment, and concrete is cast to provide a beam continuous throughout the length of the assembled sections L. The concrete forming the beam securely integrates the several sections L, and thus the desired structural member is provided.

My particular use of expanded sheet metal and concrete in the provision of a skeleton structural member is believed to be broadly new, and it will be understood that many modifications, refinements, and elaborations of the structure disclosed may be provided without departing from the essence of the invention.

I claim as my invention:

1. A structural member for the construction of floors or walls, said member comprising expanded sheet metal formed into an elongate skeleton, a beam secured in assembly with the expanded sheet metal of which said skeleton is formed, and means provided at the opposite ends of the member for reinforcing the structure and inhibiting tilting of the member, as described.

2. A preformed structural member for the construction of floors or walls, said member comprising a tubular skeleton of expanded sheet metal carrying a preformed beam of concrete molded and solidified in secure assembly with and reinforced by the reticulate sheet metal body of the skeleton.

3. A preformed structural member for the construction of floors or walls, said member comprising a sheet of expanded metal folded into a tubular skeleton of approximately rectangular cross-section, a channel pressed into the top wall

of said skeleton, and a beam of concrete cast in said channel and integrated with the expanded sheet metal, the bottom of said channel including said beam providing support and reinforcement for the expanded sheet metal bottom wall of said skeleton intermediate its lateral extent.

4. A preformed structural member for the construction of floors or walls, said member comprising a sheet of expanded metal folded into a tubular skeleton and including a concrete beam molded upon the surfaces and engaging in the reticulations of said expanded sheet metal, a portion of said sheet in the assembled structure providing a flap angularly flexible about one of the folds for giving access to the interior of said tubular skeleton.

5. A preformed structural member for the construction of floors or walls, said member comprising a sheet of expanded metal folded into a tubular skeleton of approximately rectangular cross-section, a channel pressed into the top wall of said skeleton, and a beam of concrete cast in said channel and integrated with the expanded sheet metal, the bottom of said channel including said beam providing support and reinforcement for the expanded sheet metal bottom wall of said skeleton intermediate its lateral extent, said bottom wall comprising two flaps normally meeting against the bottom of said channel and movable angularly from such normal position to give access to the interior of said structural member.

ROWLAND W. GOETZ.