(12) INTERNATIONAL APPLICATION PUBLISHED UNDER THE PATENT COOPERATION TREATY (PCT)

(19) World Intellectual Property Organization
International Bureau

(43) International Publication Date
12 September 2014 (12.09.2014)

WIPO | PCT

(10) International Publication Number
WO 2014/134659 A1

(51) International Patent Classification:
G01R 31/02 (2006.01)

(21) International Application Number:
PCT/AU2014/000153

(22) International Filing Date:
20 February 2014 (20.02.2014)

(25) Filing Language: English

(26) Publication Language: English

(30) Priority Data:
2013900805 8 March 2013 (08.03.2013) AU

(71) Applicant: **MONASH UNIVERSITY** [AU/AU]; Wellington Road, Clayton, Victoria 3168 (AU).

(72) Inventors: **LOWERY, Arthur**; 136 Derby Street, Kew, Victoria 3101 (AU). **PAYNE, Brody**; 21/99 Oxford Street, Collingwood, Victoria 3066 (AU). **ATKIN, Micah**; 2/154 Grange Road, Glen Huntly, Victoria 3163 (AU). **SMITH, Mike**; 2 Garden Close, Hillside, Victoria 3037 (AU).

(74) Agent: **WATERMARK PATENT & TRADE MARKS ATTORNEYS**; GPO Box 5093, Melbourne, Victoria 3001 (AU).

(81) Designated States *(unless otherwise indicated, for every kind of national protection available)*: AE, AG, AL, AM, AO, AT, AU, AZ, BA, BB, BG, BH, BN, BR, BW, BY, BZ, CA, CH, CL, CN, CO, CR, CU, CZ, DE, DK, DM, DO, DZ, EC, EE, EG, ES, FI, GB, GD, GE, GH, GM, GT, HN, HR, HU, ID, IL, IN, IR, IS, JP, KE, KG, KN, KP, KR, KZ, LA, LC, LK, LR, LS, LT, LU, LY, MA, MD, ME, MG, MK, MN, MW, MX, MY, MZ, NA, NG, NI, NO, NZ, OM, PA, PE, PG, PH, PL, PT, QA, RO, RS, RU, RW, SA, SC, SD, SE, SG, SK, SL, SM, ST, SV, SY, TH, TJ, TM, TN, TR, TT, TZ, UA, UG, US, UZ, VC, VN, ZA, ZM, ZW.

(84) Designated States *(unless otherwise indicated, for every kind of regional protection available)*: ARIPO (BW, GH, GM, KE, LR, LS, MW, MZ, NA, RW, SD, SL, SZ, TZ, UG, ZM, ZW), Eurasian (AM, AZ, BY, KG, KZ, RU, TJ, TM), European (AL, AT, BE, BG, CH, CY, CZ, DE, DK, EE, ES, FI, FR, GB, GR, HR, HU, IE, IS, IT, LT, LU, LV, MC, MK, MT, NL, NO, PL, PT, RO, RS, SE, SI, SK, SM, TR), OAPI (BF, BJ, CF, CG, CI, CM, GA, GN, GQ, GW, KM, ML, MR, NE, SN, TD, TG).

Published:

— *with international search report (Art. 21(3))*

(54) Title: POOLS OF LIQUID ELECTRODE TESTER

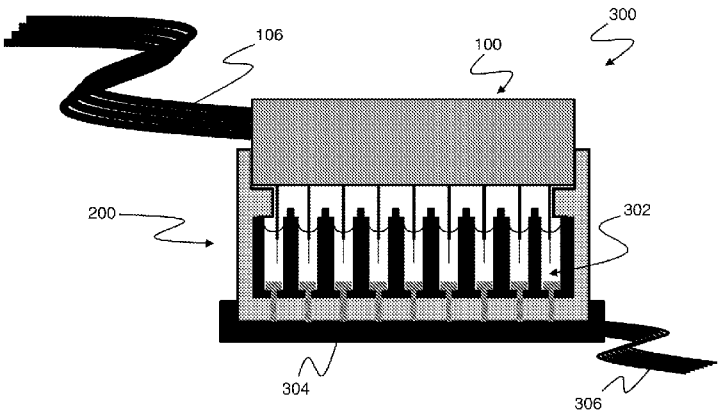

Figure 3

(57) Abstract: A test system (300) comprises an electrode array device (100) comprising a plurality of electrodes (104) mounted on a support (102). Each electrode has an electrical input adapted to receive an electrical stimulus signal. A further component (200) of the system has a housing (202) with an interior volume (203)which is adapted to receive the electrode array device (100) such that the electrode array device is maintained in position with the plurality of electrodes extending into the interior volume. The apparatus comprises a plurality of wells (204) located within the interior volume of the housing, each well having an opening positioned to receive a corresponding one of the plurality of electrodes, and further having an inner surface comprising side walls (206) extending from the opening and a base (208). A conductive element (210) is positioned within each well. The wells are isolated from one another, and a quantity of electrically conductive fluid (302) is disposed within each well. The electrode array device (100) is received within the housing such that each of the plurality of electrodes projects into a corresponding well and an exposed portion of the electrode is immersed in the electrically conductive fluid.

WO 2014/134659 A1

POOLS OF LIQUID ELECTRODE TESTER

FIELD OF THE INVENTION

[0001] The present invention relates to electrical testing and related activities, and more particularly to a system, apparatus and method for testing or altering the properties of conductive electrodes, especially fragile electrodes, without direct mechanical contact. Embodiments of the invention may find particular application in the life sciences in which sensitive, fragile and miniaturised electrodes are designed to be directly introduced into living biological systems.

BACKGROUND TO THE INVENTION

[0002] Neural implants are a class of devices designed to communicate with the nervous system of a human or animal. A common type of implant comprises electronic components interfaced with an array of small electrodes. The electrodes may take the form of projecting conductive 'needles', which are implanted directly into living tissue of the human or animal subject, in order to interface directly with healthy neurons in the body.

[0003] Applying an electrical stimulus, i.e. a current or voltage, to an electrode creates an interaction with the associated neurons, and can be used to bypass damaged areas of the brain, or other parts of the nervous system, to restore function, block pain, or prevent seizures, amongst an increasing number of applications.

[0004] An early widely-used neural prosthetic was the cochlear hearing implant, which restores a sense of sound to people with severe hearing impairments. More recently, a range of implants for other purposes, such as preventing seizures in patients with epilepsy and Parkinson's disease, have been developed. Spine implants have been developed for pain control, while other devices stimulate peripheral nerves and muscles.

[0005] However, emerging applications, such as 'bionic vision', are placing increasing demands upon electrode technologies. To deliver on the full promise of neural prosthetics, it will be necessary to develop smaller implantable devices, with large numbers of more-densely packed electrodes.

[0006] Testing of these devices prior to implantation will be essential, particularly in view of the considerable inconvenience and risk to patients if defective devices must be removed and replaced.

[0007] Due to the small size, fragility, sensitivity, and requirements to avoid contamination of electrodes or other surfaces, providing for safe, effective and efficient testing of electrode ray devices presents new challenges. There is, accordingly, scope for the development of new, improved and/or alternative systems, apparatus and methods for electrode testing. It is an object of the present invention to provide such a system, apparatus and method.

SUMMARY OF THE INVENTION

[0008] In one aspect, the invention provides a system comprising:

an electrode array device comprising a plurality of electrodes mounted on a support, each electrode having an electrical input adapted to receive an electrical stimulus signal;

an apparatus having a housing with an interior volume, the housing being adapted to receive the electrode array device such that the electrode array device is maintained in position with the plurality of electrodes extending into the interior volume,

wherein the apparatus comprises a plurality of wells located within the interior volume of the housing, each well having an opening positioned to receive a corresponding one of the plurality of electrodes, and further having an inner surface comprising side walls extending from the opening and a base, and a conductive element positioned therein

wherein the wells are isolated from one another; and

wherein a quantity of electrically conductive fluid is disposed within each well, and the electrode array device is received within the housing such that each of the plurality of electrodes projects into a corresponding well and an exposed portion thereof is immersed in the electrically conductive fluid.

[0009] Advantageously, systems embodying the invention provide a plurality of isolated 'pools' of conductive fluid, each of which is arranged to receive a corresponding electrode, and provide electrical conduction between the electrode and a conductive element disposed within the pool. This enables all of the electrodes within the array to be simultaneously available for testing, without applying any mechanical force, or indeed any form of direct physical contact, between each electrode and a test pad or other conductive element. In use, the electrical inputs of the electrodes may be driven under the control of suitable electrical test apparatus, the resulting signals may be detected at the conductive elements within each well, and accordingly the effectiveness of each electrode in conducting the stimulus signals may be measured. Preferably, this process may be automated, such that individual tests may be performed rapidly, and testing may be performed continuously, or repeatedly, over an extended period of time in order to determine the detailed behaviour of the electrodes, and the stability of their performance.

[0010] In some embodiments, the electrically conductive fluid may be a liquid, for example a sterile aqueous solution comprising a suitable electrolyte.

[0011] In alternative embodiments, the fluid may be an electrically conductive gel.

[0012] More generally, the term 'electrically conductive fluid', as used in relation to embodiments of the present invention, encompasses any suitable deformable conductive medium that will not cause damage to the electrodes upon insertion or removal. This may include liquids, gells, biological or cellular materials, and small conductive particles.

[0013] Ideally, the fluid is highly conductive, hypoallergenic, and bacteriostatic. In the case of conductive gels, it is desirable that the fluid be water-soluble.

[0014] Following testing, therefore, electrode arrays shown to have satisfactory performance may be readily washed, dried and sterilised for implantation.

[0015] The system may further include an electrical test arrangement comprising apparatus configured to apply an electrical stimulus signal to one or more of the plurality of electrodes, and apparatus configured to be conductively coupled to one or more of the conductive elements within the plurality of wells, to detect the generation of electrical signals at a corresponding one or more of the electrodes.

[0016] Alternatively, an electrical test arrangement may comprise apparatus configured to apply an electrical stimulus signal to one or more of the conductive elements within the plurality of wells, and apparatus configured to be conductively coupled to one or more of the plurality of electrodes, to detect the generation of electrical signals at a corresponding one or more of the electrodes.

[0017] Embodiments of the system may also be employed in other applications, such as performing in-vitro tests or experiments on fluid materials contained within the wells, depositing material on the surface of the electrodes (e.g. electroplating) or removing material from the surface of the electrodes (e.g. electroetching).

[0018] In another aspect, the invention provides a method employing an electrode array device which comprises a plurality of electrodes mounted on a support, each electrode having an electrical input adapted to receive an electrical stimulus signal, the method comprising:

providing an apparatus having a housing with an interior volume, the

housing being adapted to receive the electrode array device such that the electrode array device is maintained in position with the plurality of electrodes extending into the interior volume, wherein the apparatus comprises a plurality of wells located within the interior volume of the housing, each well having an opening positioned to receive a corresponding one of the plurality of electrodes, and further having an inner surface isolating the well from adjacent wells, the inner surface comprising side walls extending from the opening and a base, and further comprising a conductive element positioned therein;

disposing a quantity of an electrically conductive fluid within each well;

positioning the electrode array device within the housing such that each of the plurality of electrodes projects into a corresponding well and an exposed portion thereof is immersed in the electrically conductive fluid; and

either:

applying an electrical stimulus signal to one or more of the plurality of electrodes, and detecting one or more corresponding electrical signals conveyed to one or more of the conductive elements within the plurality of wells via the electrically conductive fluid; or

applying an electrical stimulus signal to one or more of the conductive elements within the plurality of wells, and detecting one or more corresponding electrical signals conveyed to one or more of the plurality pf electrodes via the electrically conductive fluid.

[0019] In another aspect, the invention provides an apparatus for contactless application of test signals to a plurality of electrodes in an electrode array, the apparatus comprising:

a housing having an interior volume, the housing being adapted to receive a corresponding electrode array device such that the electrode array device is maintained in position with an associated plurality of electrodes extending into the interior volume;

a plurality of wells located within the interior volume of the housing, each well having an opening positioned to receive a corresponding one of the plurality of electrodes, and further having an inner surface comprising side walls extending from the opening and a base; and

a plurality of conductive elements, each conductive element being positioned within a corresponding one of the plurality of wells,

wherein the wells are isolated from one another, in use, such that a quantity of an electrically conductive fluid may be disposed independently within each well, the quantity being sufficient to contact the corresponding electrode projecting into the well and the corresponding conductive element.

[0020] Further features, benefits and advantages of embodiments of the invention will be apparent from the following description, which is provided by way of example only, without limitation to the scope of the invention as described in the preceding statements, or defined in the claims appended hereto.

BRIEF DESCRIPTION OF THE DRAWINGS

[0021] Embodiments of the invention will now be described with reference to the accompanying drawings, in which like reference numerals refer to like features, and wherein:

Figure 1 illustrates an exemplary electrode array device suitable for testing in accordance with embodiments of the invention;

Figures 2(a) and 2(b) show schematically top and cross-sectional views of an apparatus for electrical testing of the electrode array device of Figure 1;

Figure 3 shows schematically a cross-sectional view of a system configured for testing of an electrode array device; and

Figure 4 is a flowchart illustrating a method of testing an electrode array device according to an embodiment of the invention.

DETAILED DESCRIPTION OF EMBODIMENTS

[0022] Figure 1 illustrates an exemplary electrode array device 100 for which electrical testing of electrodes may be required. The device 100 comprises a rigid support 102, which may be made of a ceramic or other suitable biologically inert

material. Projecting from the support 102 is an array comprising a plurality of electrodes 104.

[0023] In the exemplary device 100, the array 104 comprises around 60 electrodes, each of which may be approximately 2 millimetres in length, having an exposed conductive tip of around 10 micrometres in length, and spaced apart by approximately 0.5 millimetres. However, it will be appreciated that these dimensions are exemplary only, and that electrode arrays for use in different applications may have a range of different configurations and dimensions.

[0024] In a typical application, each electrode may be configured to deliver a current approximately in the range of 5 to 50 microampere for stimulation of adjacent neurons. Again, it will be appreciated that the precise level of electrical stimulation to be delivered by each electrode may vary depending upon the application.

[0025] A connecting cable 106 is provided to carry signals from which the electrical stimulus signals to be delivered by each electrode 104 may be derived. The support structure 102 may enclose electronic processing components for decoding signals received via the cable 106, and generating driving stimulus signals to each electrode 104. Advantageously, such a configuration enables the number of separate conducting wires making up the connecting cable 106 to be reduced, i.e. such that it is not necessary to provide a separate connection to every individual one of the electrodes within the array 104. For example, signals corresponding to stimuli to be applied by the plurality of electrodes 104 may be encoded and transmitted via the cable 106, with electronics within the support 102 performing the necessary decoding functions to determine which electrodes the stimuli are to be directed to, along with the corresponding magnitude and/or waveform of the stimulus signals.

[0026] Figures 2(a) and 2(b) show, respectively, top and cross-sectional views of an apparatus for electrical testing of the electrode array device 100 shown in

Figure 1. The test apparatus 200 comprises a housing 202 which is open at the top, and encloses an interior volume 203. Within the interior volume, there is located a plurality of wells 204. Each well 204 has an upper opening which is positioned to receive one of the plurality of electrodes projecting from the electrode array device 100. As shown in Figures 2(a) and 2(b), the wells 204 are square, however other shapes, such as circular or hexagonal wells, could alternatively be used.

[0027] As shown, each well 204 has an upper opening, and is otherwise enclosed and isolated from adjacent wells by side walls 206 and a closed base 208. Within each well there is positioned a conductive element 210, which may be, for example, an inert metallic or conductive polymer contact. A conductor 212 connects each conductive element 210 to a point at an exterior surface of the housing 202.

[0028] The test apparatus 200 also comprises pinholes 214 formed through the housing 202 and the base 208 of each well 204. The pinholes 214 enable fluids, such as the conductive fluids described below with reference to Figure 3, to be injected into each well under increased pressure applied from below the housing 202. Additionally, fluids and/or air bubbles within the wells 204 may be extracted by application of reduced pressure. The pinholes 214 are sufficiently small that, in the absence of an adequate pressure difference between the exterior of the housing 202 and the interior of the wells 204, surface tension prevents the flow of fluids via the pinholes. Accordingly, each well 204 remains effectively isolated from adjacent wells, and from the exterior of the housing 202.

[0029] According to different embodiments of the invention, the pinholes 214 may be optional. For example, in alternative arrangements fluids may be injected into, and/or extracted from, each of the wells 204 via the upper openings, e.g. using one or more pipettes. It will be appreciated that various arrangements and mechanisms for injecting and extracting fluids from the wells 204, such as would be apparent to persons skilled in the art, are within the scope of the invention.

[0030] Figure 3 shows schematically a cross-sectional view of a system 300 in which the electrode array device 100 is positioned within the test apparatus 200 for testing of the electrode array 104.

[0031] As shown, the housing 200 is formed such that the electrode array device 100 may be received snugly within the upper opening to the interior volume 203, in which position each of the electrodes 104 projects into a corresponding one of the wells 204.

[0032] Within each one of the wells 204 there is disposed a suitable electrically conductive fluid 302, such as a sterile aqueous electrolyte solution, or a suitable electrically conductive gel. The electrically conductive fluid 302 thus contacts the conductive tip of each electrode 104, and the corresponding conductive element 210 within the well 204. Any electrical signal generated at the electrode tip is conveyed via the conductive fluid 302 and can be detected at the conductive element 210 and conveyed to the exterior of the housing 200 via the conductor 212.

[0033] In the system 300, an electrical connector 304 is provided, to which the test apparatus 200 is fitted, whereby each conductor 212 contacts a corresponding conductor (not shown) of the connector 304. A cable 306 conveys detected signal from the connector 304, for example to a suitable test and measurement apparatus. In some embodiments, the connector 304 may contain detection and processing electronics, for detecting signals received from each electrode of the array 104, and generating a corresponding processed signal for transmission via the cable 306. Advantageously, this arrangement may enable the very large number of individual electrode signals to be transmitted via a compact cable 306, rather than requiring an individual conductor within the cable corresponding with each of the conductive elements 210.

[0034] Figure 4 shows a flowchart 400 illustrating a method of testing an electrode array device 100 using the system 300 shown in Figure 3.

[0035] At step 402, the test apparatus 200 is provided, and at step 404 the conductive fluid (e.g. liquid or gel) is disposed within each of the wells 204.

[0036] At step 406 the electrode array device 100, i.e. the device under test (DUT), is positioned within the test apparatus housing 200.

[0037] At step 408 stimulus signals are applied to one or more of the electrodes 104. At step 410, corresponding detected signals are recorded, i.e. as gathered by the conductive elements 210, conveyed via the conductors 212, and transmitted back to suitable test apparatus via the connector 304 and cable 306.

[0038] Step 412 determines whether more tests are to be conducted. For example, it may be required to apply stimulus signals to one or more further electrodes of the array 104. Alternatively, it may be desired to apply different stimulus signals to the same electrodes as previously tested. As yet another possibility, it may be desired to apply the same stimulus signals to the same electrodes, continuously and/or repeatedly, over an extended period of time, in order to test the stability and/or degradation in performance of the electrodes 104.

[0039] As will be appreciated, the tests at steps 408 and 410 may be conducted under computer control, i.e. with a computer program generating and transmitting the stimulus signal commands via the cable 106, and receiving the corresponding detected results via the cable 306, and recording the detected signals over the course of the test. Additionally, a computer-controlled test may be programmed to adapt the testing, to generate alerts, and/or to halt the test, depending upon the results received in response to stimulation of individual electrodes. For example, if any electrode fails to operate within the desired specifications, the test may be halted, and the computer may display a message indicating that the DUT has failed.

[0040] In an alternative arrangement, stimulus signals may be applied to the conductive elements 210 via the conductors 212, and corresponding signals detected at the electrodes 104.

[0041] As will be appreciated, a variety of different test scenarios may be implemented using the system 300 shown in Figure 3. The setup of the system 300, and the appartus 200, may also employed in other applications, such as performing in-vitro tests or experiments on fluid materials contained within the wells 204, depositing material on the surface of the electrodes 104 (e.g. electroplating) or removing material from the surface of the electrodes 104 (e.g. electroetching). Such alternative test configurations and/or applications, as well as other variations and combinations of features which are apparent to persons skilled in the relevant art, are encompassed by the present invention, insofar as it is defined in the claims appended hereto.

CLAIMS:

1. A system comprising:

an electrode array device comprising a plurality of electrodes mounted on a support, each electrode having an electrical input adapted to receive an electrical stimulus signal;

an apparatus having a housing with an interior volume, the housing being adapted to receive the electrode array device such that the electrode array device is maintained in position with the plurality of electrodes extending into the interior volume,

wherein the apparatus comprises a plurality of wells located within the interior volume of the housing, each well having an opening positioned to receive a corresponding one of the plurality of electrodes, and further having an inner surface comprising side walls extending from the opening and a base, and a conductive element positioned therein,

wherein the wells are isolated from one another, and

wherein a quantity of electrically conductive fluid is disposed within each well, and the electrode array device is received within the housing such that each of the plurality of electrodes projects into a corresponding well and an exposed portion thereof is immersed in the electrically conductive fluid.

2. The system of claim 1 wherein the electrically conductive fluid is a liquid.

3. The system of claim 1 wherein the electrically conductive fluid is a gel.

4. The system of claim 1 further including an electrical test arrangement comprising apparatus configured to apply an electrical stimulus signal to one or more of the plurality of electrodes, and apparatus configured to be conductively coupled to one or more of the conductive elements within the plurality of wells, to detect the generation of electrical signals at a corresponding one or more of the electrodes.

5. The system of claim 1 further including an electrical test arrangement comprising apparatus configured to apply an electrical stimulus signal to one or more of the conductive elements within the plurality of wells, and apparatus configured to be conductively coupled to one or more of the plurality of electrodes, to detect the generation of electrical signals at a corresponding one or more of the electrodes.

6. A method employing an electrode array device which comprises a plurality of electrodes mounted on a support, each electrode having an electrical input adapted to receive an electrical stimulus signal, the method comprising:

providing an apparatus having a housing with an interior volume, the housing being adapted to receive the electrode array device such that the electrode array device is maintained in position with the plurality of electrodes extending into the interior volume, wherein the apparatus comprises a plurality of wells located within the interior volume of the housing, each well having an opening positioned to receive a corresponding one of the plurality of electrodes, and further having an inner surface isolating the well from adjacent wells, the inner surface comprising side walls extending from the opening and a base, and further comprising a conductive element positioned therein;

disposing a quantity of an electrically conductive fluid within each well;

positioning the electrode array device within the housing such that each of the plurality of electrodes projects into a corresponding well and an exposed portion thereof is immersed in the electrically conductive fluid; and

either

applying an electrical stimulus signal to one or more of the plurality of electrodes, and detecting one or more corresponding electrical signals conveyed to one or more of the conductive elements within the plurality of wells via the electrically conductive fluid; or

applying an electrical stimulus signal to one or more of the conductive elements within the plurality of wells, and detecting one or more corresponding electrical signals conveyed to one or more of the plurality pf electrodes via the electrically conductive fluid.

7. The method of claim 6 wherein the apparatus comprises pinholes formed through the housing and the base of each well, and the step of disposing the quantity of the electrically conductive fluid within each well comprises injecting the electrically conductive fluid into each well via a corresponding one of the pinholes.

8. An apparatus for contactless application of test signals to a plurality of electrodes in an electrode array, the apparatus comprising:

a housing having an interior volume, the housing being adapted to receive a corresponding electrode array device such that the electrode array device is maintained in position with an associated plurality of electrodes extending into the interior volume;

a plurality of wells located within the interior volume of the housing, each well having an opening positioned to receive a corresponding one of the plurality of electrodes, and further having an inner surface comprising side walls extending from the opening and a base; and

a plurality of conductive elements, each conductive element being positioned with a corresponding one of the plurality of wells,

wherein the wells are isolated from one another, in use, such that a quantity of an electrically conductive fluid may be disposed independently within each well, the quantity being sufficient to contact the corresponding electrode projecting into the well and the corresponding conductive element.

9. The apparatus of claim 8 further comprising a plurality of conductors arranged to convey signals between each one of the conductive elements and an exterior of the housing.

10. The apparatus of claim 7 comprising pinholes formed through the housing and the base of each well, for injection of electrically conductive fluid into each well and/or extraction or air or electrically conductive fluid from each well.

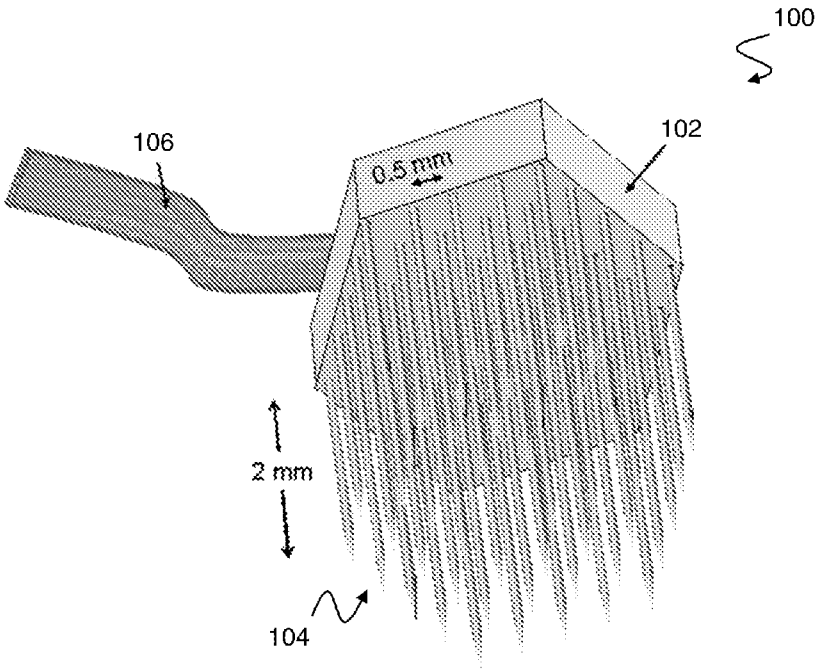

Figure 1

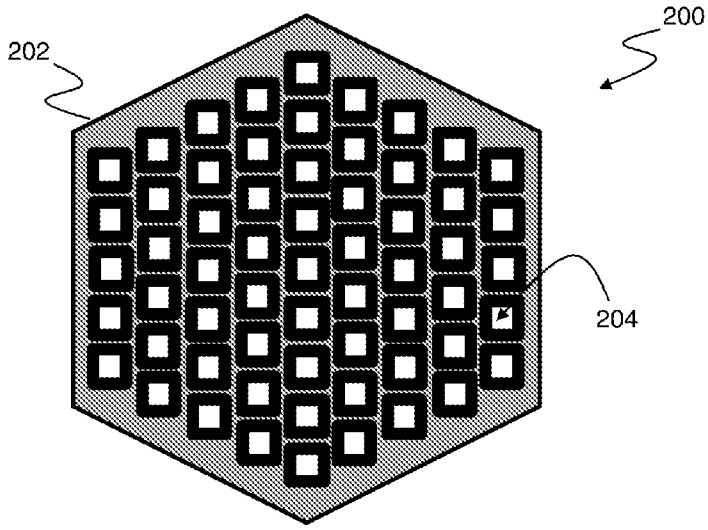

Figure 2(a)

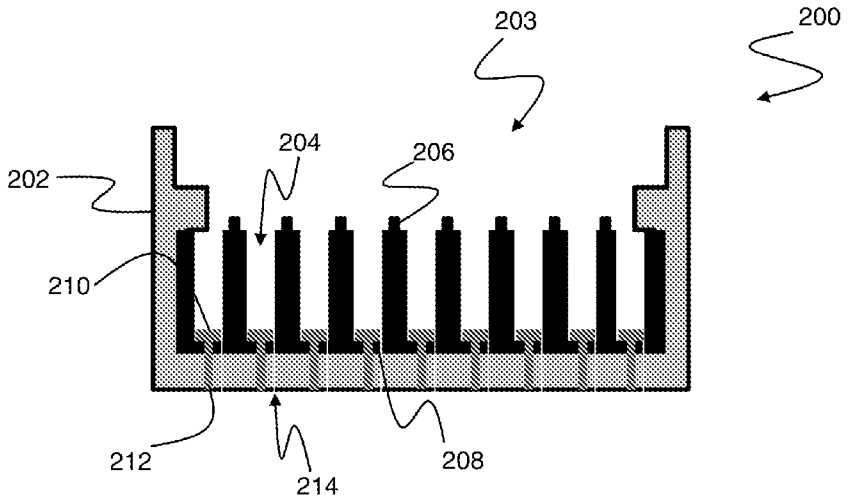

Figure 2(b)

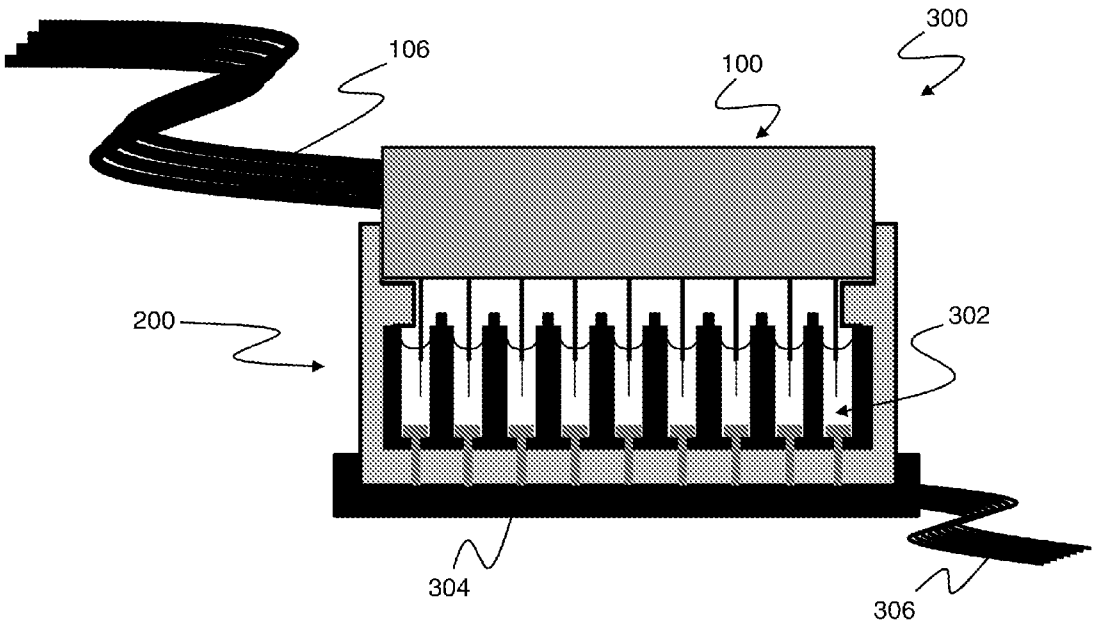

Figure 3

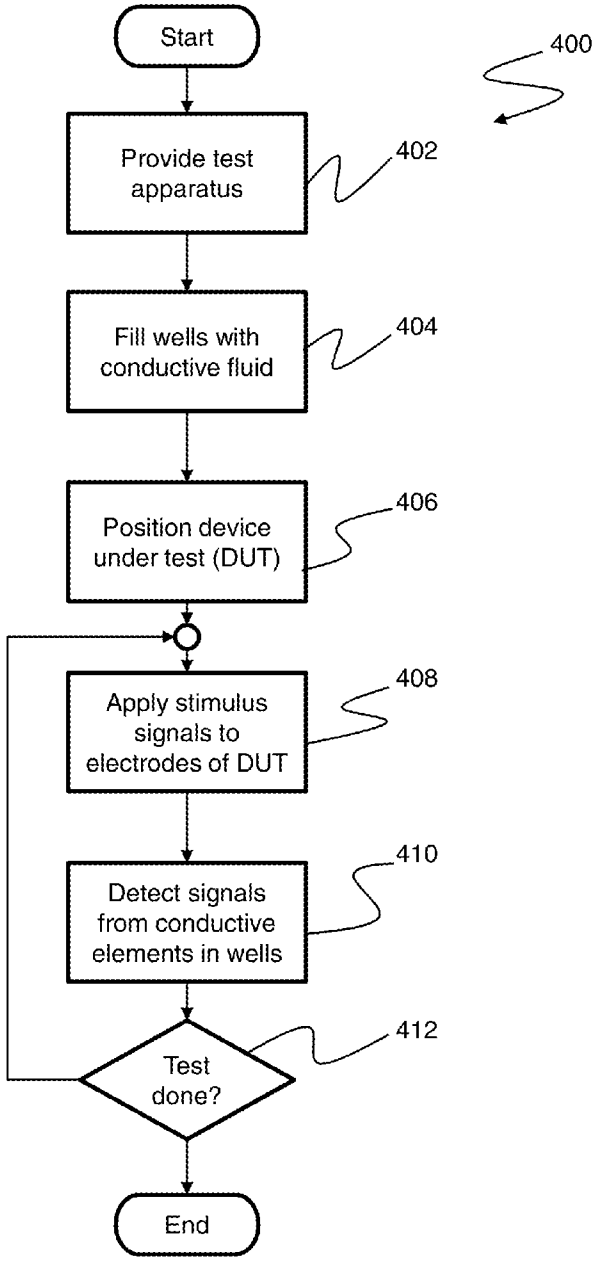
Start
400
Provide test apparatus
402
Fill wells with conductive fluid
404
Position device under test (DUT)
406
Apply stimulus signals to electrodes of DUT
408
Detect signals from conductive elements in wells
410
Test done?
412
End

Figure 4

INTERNATIONAL SEARCH REPORT

International application No.
PCT/AU2014/000153

A. CLASSIFICATION OF SUBJECT MATTER

G01R 31/02(2006.01)i

According to International Patent Classification (IPC) or to both national classification and IPC

B. FIELDS SEARCHED

Minimum documentation searched (classification system followed by classification symbols)
G01R 31/02; B05D 5/12; B32B 15/00; A61B 19/00; G01N 33/487; G01F 23/26; B05C 13/02; B32B 1/00; A61B 17/08; C12M 1/34

Documentation searched other than minimum documentation to the extent that such documents are included in the fields searched
Korean utility models and applications for utility models
Japanese utility models and applications for utility models

Electronic data base consulted during the international search (name of data base and, where practicable, search terms used)
eKOMPASS(KIPO internal) & keywords: test, electrode, array, fluid, well

C. DOCUMENTS CONSIDERED TO BE RELEVANT

Category*	Citation of document, with indication, where appropriate, of the relevant passages	Relevant to claim No.
X	US 2010-0229642 A1 (BERNDT et al.) 16 September 2010 See abstract, paragraphs [0053]-[0079], claims 1, 14, 24-31 and figures 1-2, 25.	1-10
A	US 2005-0089626 A1 (WANG et al.) 28 April 2005 See abstract, paragraphs [0057]-[0059] and figures 10-11.	1-10
A	US 6300773 B1 (WARDELL et al.) 09 October 2001 See columns 2-4, claims 1-5 and figures 1-4.	1-10
A	US 2005-0019900 A1 (BROYER et al.) 27 January 2005 See abstract, paragraphs [0061]-[0103] and figures 1-5.	1-10
A	US 2002-0098332 A1 (WARREN et al.) 25 July 2002 See abstract, claims 1-10 and figures 1-3.	1-10

☐ Further documents are listed in the continuation of Box C.

☒ See patent family annex.

* Special categories of cited documents:
"A" document defining the general state of the art which is not considered to be of particular relevance
"E" earlier application or patent but published on or after the international filing date
"L" document which may throw doubts on priority claim(s) or which is cited to establish the publication date of another citation or other special reason (as specified)
"O" document referring to an oral disclosure, use, exhibition or other means
"P" document published prior to the international filing date but later than the priority date claimed
"T" later document published after the international filing date or priority date and not in conflict with the application but cited to understand the principle or theory underlying the invention
"X" document of particular relevance; the claimed invention cannot be considered novel or cannot be considered to involve an inventive step when the document is taken alone
"Y" document of particular relevance; the claimed invention cannot be considered to involve an inventive step when the document is combined with one or more other such documents,such combination being obvious to a person skilled in the art
"&" document member of the same patent family

Date of the actual completion of the international search	Date of mailing of the international search report
16 May 2014 (16.05.2014)	**19 May 2014 (19.05.2014)**

Name and mailing address of the ISA/KR
International Application Division
Korean Intellectual Property Office
189 Cheongsa-ro, Seo-gu, Daejeon Metropolitan City, 302-701, Republic of Korea
Facsimile No. +82-42-472-7140

Authorized officer
KANG, Sung Chul
Telephone No. +82-42-481-8405

INTERNATIONAL SEARCH REPORT

Information on patent family members

International application No.
PCT/AU2014/000153

Patent document cited in search report	Publication date	Patent family member(s)	Publication date
US 2010-0229642 A1	16/09/2010	CN 101779106 A	14/07/2010
		CN 101779106 B	02/01/2013
		EP 2167924 A1	31/03/2010
		JP 2010-530978 A	16/09/2010
		JP 5371972 B2	18/12/2013
		US 8468885 B2	25/06/2013
		WO 2009-002868 A1	31/12/2008
US 2005-0089626 A1	28/04/2005	US 7427341 B2	23/09/2008
US 6300773 B1	09/10/2001	AU 8050898 A	19/01/1999
		SE 508946 C2	16/11/1998
		SE 9702462 A	16/11/1998
		SE 9702462 DO	26/06/1997
		SE 9702462 L	16/11/1998
		WO 99-00063 A1	07/01/1999
US 2005-0019900 A1	27/01/2005	AU 2002-364455 A1	30/06/2003
		EP 1456611 A1	15/09/2004
		FR 2833699 A1	20/06/2003
		FR 2833699 B1	28/05/2004
		JP 2005-513432 A	12/05/2005
		JP 4295623 B2	15/07/2009
		WO 03-052359 A1	26/06/2003
US 2002-0098332 A1	25/07/2002	US 2002-0100692 A1	01/08/2002
		US 2003-0032205 A1	13/02/2003
		US 2003-0104481 A1	05/06/2003
		US 6187164 B1	13/02/2001
		US 6468806 B1	22/10/2002
		US 6756109 B2	29/06/2004
		US 6818110 B1	16/11/2004