(19) Europäisches Patentamt
European Patent Office
Office européen des brevets

(11) EP 1 508 444 A2

(12) **EUROPEAN PATENT APPLICATION**

(43) Date of publication:
23.02.2005 Bulletin 2005/08

(51) Int Cl.[7]: **B41J 2/045**, B41J 2/14, B41J 2/16

(21) Application number: **04024058.2**

(22) Date of filing: **15.07.1998**

(84) Designated Contracting States:
AT BE CH DE DK ES FI FR GB GR IE IT LI NL PT SE

(30) Priority:
15.07.1997 AU PO806697
15.07.1997 AU PO807297
15.07.1997 AU PO807197
15.07.1997 AU PO804797
15.07.1997 AU PO803597
15.07.1997 AU PO804497
15.07.1997 AU PO806397
15.07.1997 AU PO805697
15.07.1997 AU PO806997
15.07.1997 AU PO804997
15.07.1997 AU PO803697
15.07.1997 AU PO804897
15.07.1997 AU PO807097
15.07.1997 AU PO806797
15.07.1997 AU PO800197
15.07.1997 AU PO804197
15.07.1997 AU PO800497
15.07.1997 AU PO793597
15.07.1997 AU PO793697
15.07.1997 AU PO806197
15.07.1997 AU PO805497
15.07.1997 AU PO806597
15.07.1997 AU PO805597
15.07.1997 AU PO805397
15.07.1997 AU PO793397
15.07.1997 AU PO795097
15.07.1997 AU PO794997
15.07.1997 AU PO806097
15.07.1997 AU PO805997
15.07.1997 AU PO807397
15.07.1997 AU PO807697
15.07.1997 AU PO807597
15.07.1997 AU PO807797
15.07.1997 AU PO805897
09.06.1998 AU PP398398
09.06.1998 AU PP398298

(62) Document number(s) of the earlier application(s) in accordance with Art. 76 EPC:
98933350.5 / 0 999 933

(71) Applicant: **Silverbrook Research Pty. Limited**
Balmain, NSW 2041 (AU)

(72) Inventor: **Silverbrook, Kia**
Leichhardt NSW 2040 (AU)

(74) Representative: **Moore, Barry et al**
Hanna, Moore & Curley,
11 Mespil Road
Dublin 4 (IE)

Remarks:
This application was filed on 08 - 10 - 2004 as a divisional application to the application mentioned under INID code 62.

EP 1 508 444 A2

(54) **Inkjet printer with electrostatically actuated plates**

(57) In an inkjet nozzle comprising:

a nozzle chamber having an ink ejection port in one wall of said chamber;
an ink supply source interconnected to said nozzle chamber;
an electrostatic actuator to eject ink from said nozzle chamber via said ink ejection port, said electrostatic actuator comprising a series of conductive parallel plates interleaved with a resiliently compressible material; such that, a potential difference across said plates attracts adjacent plates to one another thereby causing said compressible material to resiliently yield; and
reducing said potential difference returns said compressible material to its quiescent state, thereby resulting in the ejection of ink from said ejection port.

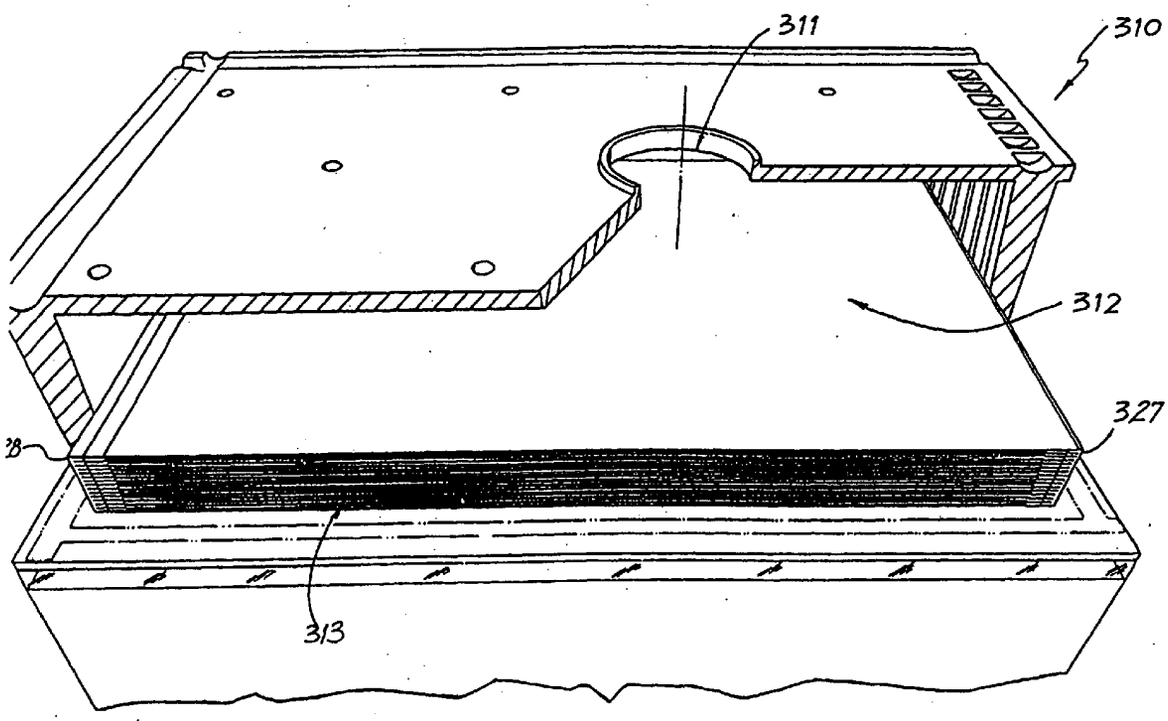

FIG. 37

Description

Field of Invention

[0001] The present invention relates to the field of ink jet printing systems.

Background of the Art

[0002] Many different types of printing have been invented, a large number of which are presently in use. The known forms of print have a variety of methods for marking the print media with a relevant marking media. Commonly used forms of printing include offset printing, laser printing and copying devices, dot matrix type impact printers, thermal paper printers, film recorders, thermal wax printers, dye sublimation printers and ink jet printers both of the drop on demand and continuous flow type. Each type of printer has its own advantages and problems when considering cost, speed, quality, reliability, simplicity of construction and operation etc.

[0003] In recent years, the field of ink jet printing, wherein each individual pixel of ink is derived from one or more ink nozzles has become increasingly popular primarily due to its inexpensive and versatile nature.

[0004] Many different techniques of ink jet printing have been invented. For a survey of the field. reference is made to an article by J Moore, "Non-Impact Printing: Introduction and Historical Perspective", Output Hard Copy Devices, Editors R Dubeck and S Sherr, pages 207 - 220 (1988).

[0005] Ink jet printers themselves come in many different types. The utilisation of a continuous stream ink in ink jet printing appears to date back to at least 1929 wherein US Patent No. 1941001 by Hansell discloses a simple form of continuous stream electro-static ink jet printing.

[0006] US Patent 3596275 by Sweet also discloses a process of a continuous ink jet printing including the step wherein the ink jet stream is modulated by a high frequency electro-static field so as to cause drop separation. This technique is still utilized by several manufacturers including Elmjet and Scitex (see also US Patent No. 3373437 by Sweet et al)

[0007] Piezo-electric ink jet printers are also one form of commonly utilized ink jet printing device. Piezo-electric systems are disclosed by Kyser et. al. in US Patent No. 3946398 (1970) which utilises a diaphragm mode of operation, by Zolten in US Patent 3683212 (1970) which discloses a squeeze mode of operation of a piezo electric crystal, Stemme in US Patent No. 3747120 (1972) discloses a bend mode of piezo-electric operation, Howkins in US Patent No. 4459601 discloses a Piezo electric push mode actuation of the ink jet stream and Fischbeck in US 4584590 which discloses a sheer mode type of piezo-electric transducer element.

[0008] Recently, thermal ink jet printing has become an extremely popular form of ink jet printing. The ink jet printing techniques include those disclosed by Endo et al in GB 2007162 (1979) and Vaught et al in US Patent 4490728. Both the aforementioned references disclosed ink jet printing techniques rely upon the activation of an electrothermal actuator which results in the creation of a bubble in a constricted space, such as a nozzle, which thereby causes the ejection of ink from an aperture connected to the confined space onto a relevant print media. Printing devices utilising the electro-thermal actuator are manufactured by manufacturers such as Canon and Hewlett Packard.

[0009] As can be seen from the foregoing, many different types of printing technologies are available. Ideally, a printing technology should have a number of desirable attributes. These include inexpensive construction and operation, high speed operation, safe and continuous long term operation etc. Each technology may have its own advantages and disadvantages in the areas of cost, speed, quality, reliability, power usage, simplicity of construction operation, durability and consumables.

[0010] Many ink jet printing mechanisms are known. Unfortunately, in mass production techniques, the production of ink jet heads is quite difficult. For example, often, the orifice or nozzle plate is constructed separately from the ink supply and ink ejection mechanism and bonded to the mechanism at a later stage (Hewlett-Packard Journal, Vol. 36 no 5, pp33-37 (1985)). These separate material processing steps required in handling such precision devices often adds a substantially expense in manufacturing.

[0011] Additionally, side shooting ink jet technologies (U.S. Patent No. 4,899,181) are often used but again, this limit the amount of mass production throughput given any particular capital investment.

[0012] Additionally, more esoteric techniques are also often utilized. These can include electroforming of nickel stage (Hewlett-Packard Journal, Vol. 36 no 5, pp33-37 (1985)), electro-discharge machining, laser ablation (U.S. Patent No. 5,208,604), micro-punching, etc.

[0013] The utilisation of the above techniques is likely to add substantial expense to the mass production of ink jet print heads and therefore add substantially to their final cost.

[0014] It would therefore be desirable if an efficient system for the mass production of ink jet print heads could be developed.

Summary of the invention

[0015] It is an object of the present invention to provide for an ink jet printing mechanism having a series of ink ejection nozzles, with the nozzles including an internal selective actuator mechanism activated on a nozzle by nozzle basis by the placement of a field around said nozzles.

[0016] In accordance with an aspect of the present invention there is provided an ink jet printing nozzle arrangement comprising a nozzle chamber having an ink ejection port at one end; a plunger constructed from soft magnetic material and positioned between the nozzle chamber and an ink chamber, which allows for the supply of ink to the nozzle chamber, and an electric coil located adjacent to the plunger and electrically connected to a nozzle activation signal wherein, upon activation, the plunger is caused to move from an ink loaded position to an ink ejection position and thereby causes the ejection of ink from the ink chamber through the ejection port.

[0017] Further, the ink ejection nozzle can comprise an armature plate constructed from soft magnetic material and the plunger is attracted to the armature plate on the activation of the coil. A cavity is defined by the plunger in which the electric coil is located, which has its dimensions reduced as a result of movement of the plunger, the plunger further having a series of fluid release slots in fluid communication with the cavity and the ink chamber, allowing for the expulsion of fluid under pressure in the formed cavity. Preferably, the inkjet printing nozzle comprises a resilient means for assisting in the return of the plunger from the ink ejection position to the ink loaded position after the ejection of ink from the ink ejection port. Advantageously, the resilient means comprises a torsional spring of an arcuate construction having a circumferential profile substantially the same as that of the plunger.

[0018] In accordance with a further aspect of the present invention, there is provided an ink jet printing nozzle arrangement constructed in accordance with the previous aspect of the invention wherein the plunger has along one surface a series of slots. This surface forms the inner radial surface defining the cavity between the plunger and the electric coil. Further, the plunger has no fluid release slots in its top surface that defines the top wall of the cavity formed. Upon reduction of the cavity dimensions due to the downward movement of the plunger, induced by the electric coil, an ink flow through the slots into the nozzle chamber occurs assisting in the ejection of ink from the ink ejection port. Preferably, the slots have a substantially constant cross-sectional profile.

[0019] In accordance with a further aspect of the present invention there is provided an ink jet nozzle comprising a nozzle chamber having an ink ejection port in one wall of the chamber, an ink supply source interconnected to the nozzle chamber, an electrostatic actuator comprising a first planar electrode formed within a bottom substrate of the nozzle chamber and a moveable second planar electrode arranged above the first planar electrode, wherein the second planar electrode is moveable to a pre-firing position adjacent to said first planar electrode, upon forming a potential difference across the electrodes, thereby causing a corrugated border portion of the second electrode to concertina, such that, upon reduction of the potential difference, the corrugated border returns to its quiescent position and thereby causes the ejection of ink from the nozzle chamber.

[0020] In accordance with a further aspect of the present invention there is provided an ink jet nozzle comprising a nozzle chamber having an ink ejection port in one wall of the chamber, an ink supply source interconnected to the nozzle chamber, an electrostatic actuator to eject ink from the nozzle chamber via the ink ejection port, wherein the electrostatic actuator comprises a first planar electrode formed within a bottom substrate of the nozzle chamber and a moveable second planar electrode arranged above the first planar electrode, and the ink jet nozzle arrangement is being formed from the depositing and etching of material on a single monolithic wafer. Further, there is an air gap between the first and second planar electrode which is interconnected to an external atmosphere at a side of the nozzle chamber such that air flows into and out of the gap upon movement of the actuator. Preferably the surface of the electrodes facing and opposing electrode are coated with a material having a low coefficient of friction so as to reduce the possibilities of section. Advantageously this material comprised of substantially polytetrafluoroethylene. The second planar electrode includes preferable a layer of stiffening materials for maintaining the stiffness of the second planar electrode which is substantially comprised of nitride. The air gap between a first and a second planar electrode structure is formed by utilisation of a sacrificial material layer which is etched away to release the second planar electrode structure.

[0021] Further an outer surface of the ink chamber includes a plurality of etchant holes provided so as to allow a more rapid etching of sacrificial layers during construction.

[0022] In accordance with a further aspect of the present invention there is provided an ink jet nozzle comprising a nozzle chamber having an ink ejection port in one wall of the chamber, an ink supply source interconnected to the nozzle chamber, an electrostatic actuator comprising a series of conductive parallel plates interleaved with a resiliently compressible material to eject ink from the nozzle chamber via the ejection port and a method comprising the steps of producing a potential difference across the plates so as to attract adjacent plates to one another and thereby causing the compressible material to resiliently yield and further reducing the potential difference such that the compressible material returns to its quiescent state, thereby resulting in the ejection of ink from the ejection port. The resilient yielding of the compressible material results in ink being drawn into the nozzle chamber by means of surface tension effects

around the ink ejection port.

[0023] In accordance, with a second aspect of the present invention, there is provided an ink jet nozzle comprising a nozzle chamber having an ink ejection port in one wall of the chamber, an ink supply source interconnected to the nozzle chamber, an electrostatic actuator, which comprises a series of conductive parallel plates interleaved with a resiliently compressible material, to eject ink from the nozzle chamber via the ink ejection port and a control means for producing a potential difference across the plates so that the material is resiliently, such that, upon deactivation, the electrostatic actuator causes ink to be ejected via the ink ejection port. Advantageously the compressible material comprises a material having a high dielectric constant, such material including piezo electric, electrostrictive or materials which can be switched between a ferro-electric and an anti-ferro-electric phase. Advantageously the electrostatic actuator is constructed utilizing semi-conductor fabrication techniques by laying down one planar layer at a time so as to form an initial sandwiched preform, and subsequently selectively etching the preform so as to provide for an electrical interconnect to the conductive parallel plates. Further groups of the series of the conductive parallel plates are constructed from different materials so as to allow for the selective etching of the plates so as to divide them into 2 groups of different polarities during operation. The plates from each group are interconnected to a common conductive portion for the provision of a charge to the conductive plates. Advantageously, the plates are constructed utilizing chemical vapor deposition techniques. The outer surface of the nozzle chamber of the ink jet nozzle includes a plurality of etchant holes provided so as to allow a more rapid etching of sacrificial layers during construction.

[0024] In accordance with a further aspect of the present invention there is provided an ink jet printing nozzle apparatus with a connected ink supply chamber, the apparatus comprising an ink ejection means having one surface in fluid communication with the ink in the nozzle chamber, a recoil means connected to the ink ejection means and a first actuator means connected to the ink ejection means.

[0025] The method of ejecting ink from the ink chamber can comprise the steps of activation of the first actuator means which drives the ink ejection means from a quiescent position to a pre-firing position and deactivation of the first actuator means, causing the recoil means to drive the ink ejection means to eject ink from the nozzle chamber through the ink ejection port. Further, the recoil means can include a resilient member and the movement of the first actuator results in resilient movement of this recoil means and the driving of the ink ejection means can comprise the resilient member acting upon the ink ejection means. Preferably, the first actuator means can comprise an electromagnetic actuator and the recoil means comprises a torsional spring. The ink ejection means and the first actuator can be interconnected in a cantilever arrangement wherein small movements of the first actuator means result in larger movements of the ink ejection means. Advantageously, the recoil means is located substantially at the pivot point of the cantilever construction.

[0026] The first actuator can include a solenoid coil surrounded by a magnetic actuator having a first mixed magnetic pole and a second moveable magnetic pole, such that, upon activation of the coil, the poles undergo movement relative to one another with the moveable magnetic pole being connected to the actuator side of the cantilever construction. Preferably, the moveable magnetic pole includes a plurality of slots for the flow of ink through the pole upon movement. The ink ejection means can comprise a piston or plunger or having a surface substantially mating with at least one surface of the nozzle chamber.

[0027] In accordance with a further aspect of the present invention there is provided an ink jet nozzle arrangement having an ink ejection port for the ejection of ink comprising a nozzle chamber interconnected to the ink ejection port and having one moveable wall including an electromagnetic coil, and the nozzle chamber is in a magnetic field such that, upon activation of the electromagnetic coil the moveable wall experiences a force and is caused to move so as to result in the ejection of ink from the nozzle chamber via the ink ejection port.

[0028] Further, the moveable wall can be caused to pivot upon activation and interconnects the nozzle chamber with an ink supply chamber and the nozzle chamber is refilled from the ink supply chamber upon the ejection of ink. Preferably the moveable wall is interconnected to the nozzle chamber wall by a resilient means. The resilient means acts to return the moveable wall to a quiescent position upon deactivation of the electromagnetic coil.

Advantageously, the electromagnetic coil includes multiple layers substantially comprised of copper. Further, the ink jet nozzle can be in a magnetic, permanent field, which is provided by neodymium iron boron magnets.

[0029] In accordance with a further aspect of the present invention there is provided an ink jet printing nozzle apparatus comprising a nozzle chamber in fluid communication with an ink chamber and utilized for the storage of ink to be printed out by the nozzle apparatus, the nozzle chamber having a nozzle chamber outlet hole for the ejection of ink from the nozzle chamber, a magnetic piston located over an aperture in the nozzle chamber and an activation coil located adjacent to the magnetic piston, so that upon activation by a current, force is applied to the piston sufficient to cause movement of the piston from a first position to a second position, this movement causing ink within the nozzle chamber to be ejected from the nozzle chamber through a nozzle chamber outlet hole onto a print media.

[0030] Further, the printing nozzle apparatus can comprise a series of resilient means attached to the magnetic piston so as to return the magnetic piston to the first position upon deactivation of the activation coil. Preferably, the resilient means comprises at least one torsional spring.

[0031] The ink jet nozzle apparatus is constructed utilizing semi conductor fabrication techniques, and the magnetic piston and/or coils are constructed from a dual damascene process. Advantageously, the nozzle chamber outlet hole includes a nozzle rim adapted to reduce hydrophilic surface spreading of the ink. Preferably, the activation coil is constructed from a copper deposition process and the magnetic piston is constructed from a rare earth magnetic material.

[0032] Further, the resilient means in the inkjet printing nozzle apparatus can be constructed from silicon nitride.

[0033] In accordance with an aspect of the present invention there is provided an ink jet nozzle comprising an ink reservoir containing an ink supply under an oscillating pressure, a nozzle chamber having an ink ejection port for the ejection of ink drops onto a print media, and a shutter means interconnecting the reservoir and the nozzle chamber, which is operable by means of electromagnetic actuation so as to control the ejection of ink from the ejection port.

[0034] In one embodiment the actuation can comprise activating an electromagnet so as to move an arm interconnected to at least one end of the shutter means, thereby opening a channel for the flow of ink, followed by maintaining a lower keeper current so as to maintain the channel in an open state, followed by deactivation of the electromagnet, and the subsequent returning of the shutter to a closed position. Preferably the electromagnet includes a first and second end, wherein each of the ends are positioned closely adjacent to the arm and the electromagnetic actuation includes movement of the arm closer to both of the ends. Further, the arm is pivoted between the first and second end of the electromagnet, and the electromagnet has a spiral shape.

[0035] Advantageously, the ink jet print nozzle includes a resilient means connected to the shutter means which is elastically deformed by the electromagnetic actuation and operates to return to an initial state upon deactivation of the shutter means so as to restrict the further flow of fluid from the ink reservoir to the nozzle chamber.

[0036] Preferably the resilient means can include a coiled spring. The ink jet print nozzle is formed utilizing semiconductor fabrication techniques from a copper coil surrounding a soft metal core. The copper coil can be formed from utilizing a Damascene process. Preferably the shutter means comprises a series of moveable slats, moveable over an aperture in the wall of the nozzle chamber.

[0037] In accordance with a further aspect of the present invention, there is provided a method of ejecting ink from an ink jet print nozzle comprising utilizing an electromagnetically activated shutter to control the flow of ink into a nozzle chamber such that ink is ejected from the nozzle chamber when the shutter is open utilizing a first high pressure cycle of a pressurised ink supply for the ejection of the ink, a low pressure cycle for the separation of the ejected drop from the ink in the nozzle chamber and a second high pressure cycle of the pressurised ink supply for refilling the nozzle chamber with ink.

[0038] In accordance with a further aspect of the present invention there is provided an ink jet nozzle comprising a nozzle chamber having an ink ejection port for the ejection for the ejection of ink from the nozzle chamber, an ink supply reservoir for supplying ink to the nozzle chamber and a magnetic actuator located between the nozzle chamber and the ink supply reservoir which is actuated to eject ink by means of externally supplied magnetic pulse cycles.

[0039] Further, the ink jet nozzle comprises a part of an array of nozzles and each of the nozzles further comprises a blocking means, for blocking movement of the magnetic actuator for those nozzles of which it is desired not to eject ink from the nozzle chambers in a current magnetic pulse cycle. Preferably the blocking means comprises a thermal actuator having a moveable end protuberance which is moveable to a position blocking the path of movement of the magnetic actuator. The magnetic actuator can include an end protuberance designed to engage the blocking means upon movement of the actuator. Advantageously the magnetic actuator is affixed to an adjacent wall of the nozzle chamber by means of two bendable strip portions which allow bending movement of the magnetic actuator upon activation by the externally supplied magnetic pulse cycles.

[0040] Further the thermal actuator can comprise substantially two arms affixed to a substrate, a first arm having a thin serpentine structure encased in a material having a high coefficient of thermal expansion and a second arm comprising a thicker arm having a tapered thin portion near the end connecting to the substrate so as to concentrate any bending of the thermal actuator at a point close to the substrate. The blocking means can be located in a cavity having a low degree of fluid flow through the cavity and preferably, the serpentine arm of the thermal actuator is located alongside an inner wall of the cavity.

[0041] The ink jet nozzle is constructed via fabrication of a silicon wafer utilizing semi-conductor fabrication techniques. Advantageously, the actuators include a silicon nitride covering as required so as to insulate and passivate them from adjacent portions. Further the nozzle chambers can be formed from high density low pressure plasma etching of the silicon substrate.

[0042] In accordance with a further aspect of the present invention there is provided an ink jet nozzle comprising a nozzle chamber having an ink ejection port at one wall of the chamber, a fixed electric coil located within the chamber or within a wall of the chamber and a moveable plate, in which embedded is an electric coil, located close to the fixed electric coil such that when the amount of current passing through set coils are altered, the movable plunger plate undergoes corresponding movement towards or away from the fixed electric coil and wherein the movement is utilized to inject ink from the nozzle chamber via the ink injection port.

[0043] Further, the ink jet nozzle can comprise spring means connected to the moveable plate wherein the moveable plate goes from a quiescent position to a spring loaded position upon activation of the coils and upon deactivation of the coils the spring means causes the moveable coil to return to its quiescent position and to thereby eject ink from the ink ejection port. Preferably, the fixed electric coil of the moveable plunger plate comprises a stacked multi level spiral of conductive material and the stacked conductive material is interconnected at a central axial point of the spiral. The coils are electrically connected together to form a combined circuit.

[0044] Further, the spring means comprises torsional springs attached to the moveable coil and a conductive strip contact to the coils is located within the torsional springs. Advantageously, the coil comprises substantially copper and is formed from utilization of a damascene construction. The nozzle can be constructed utilizing a sacrificial etch to release the structure of the moveable coil. Preferably, the nozzle chamber includes a series of slots within the walls of the nozzle chamber so as to allow the supply of ink to the nozzle chamber and an outer surface of the nozzle chamber includes a series of small etched holes for the etching of any sacrificial layer utilized in the construction of the inkjet print nozzle.

[0045] In accordance with a further aspect of the present invention there is provided a means of ejecting ink from a nozzle chamber utilizing the electro-magnetic forces between two coils embedded into place to cause movement of at least one of the plates, the movement further causing the consequential ejection of ink from the nozzle chamber. Further, the utilization of electro-magnetic forces comprises using the electro-magnetic forces between coils embedded into a moveable and a fixed plate so that the moveable plate moves closer to the fixed plate, the moveable plate further being connected to a spring which upon the movement, stores energy within the spring such as that upon deactivation of a current through the coil, the spring releases its stored energy to thereby cause the movement of the moveable plate so as to cause the ejection of ink from the nozzle.

[0046] In accordance with a further aspect of the present invention, an ink jet nozzle arrangement is presented comprising: a nozzle chamber having an ink ejection port for the ejection of ink, an ink supply reservoir for supplying ink to the nozzle chamber, a plunger located within the nozzle chamber and further, a linear stepper actuator interconnected to the plunger and adapted to actuate the plunger so as to cause the ejection of ink from the ink ejection port. At least one surface of the plunger located alongside a wall of the nozzle chamber is hydrophobic. Preferably, the linear actuator interconnected to the plunger in the jet nozzle chamber is driven in three phases by a series of electromagnets. Preferably, a series of twelve electromagnets is arranged in opposing pairs alongside the linear actuator. Further, each phase is duplicated resulting in four electromagnets for each phase. The ink jet nozzle has an open wall along a back surface of the plunger which comprises a series of posts adapted to form a filter to filter ink flowing through the open wall into the nozzle chamber. The linear actuator construction includes a guide at the end opposite to the nozzle chamber for guiding the linear actuator.

[0047] In accordance with a further aspect of the present invention there is provided an ink jet nozzle comprising a nozzle chamber having an ink ejection port for the ejection of ink from the nozzle chamber, an ink supply reservoir for supplying ink to the nozzle chamber, a shutter for opening and closing a fluid passage between the reservoir and chamber so as to cause the ejection of ink from the ink ejection port and the shutter includes a ratcheted edge for moving the shutter to an open or closed position via the utilization of an actuator driven driving means. Further, the driving means can include a gearing means interconnected to a driving means wherein the gearing means results in a reduced driving frequency of the ratcheted edge relative to the frequency of operation of the driving means. Preferably, the driving means includes utilizing a conductive element in a magnetic field to exert a force on the ratcheted edge and utilizing a conductive element in a magnetic field to exert a force on a cog of a gearing mechanism with the gearing mechanism utilized to transfer the force on the ratcheted edge. Advantageously, the conductive element includes a concertinaed structure designed to expand or contract upon movement of the conductive element.

[0048] The shutter mechanism can include a series of slots having corresponding retainers utilized in guiding the shutter between the reservoir and the nozzle chamber and the shutter is formed through the fabrication of an array of nozzles on a silicon wafer structure. Preferably, the ink within the ink supply reservoir is driven with an oscillating ink pressure.

[0049] In accordance with a further aspect of the present invention, there is provided an ink jet nozzle comprising a nozzle chamber having an ink ejection port for the ejection of ink from the nozzle chamber, an ink supply reservoir for supplying ink to the nozzle chamber, and a tapered magnetic plunger located between the nozzle chamber and the ink supply reservoir, which is surrounded by an electromagnetic device such that upon activation of the device the magnetic plunger is forced towards the ink ejection port to thereby cause the ejection of ink from the ink ejection port.

[0050] Preferably the plunger is substantially circular and has a tapered rim at adjacent portions of the electromagnetic device. The electromagnetic device is of a cylindrical shape and the plunger is located in the centre of the cylinder. Advantageously, the plunger is further connected to a resilient means which allows for the return of the plunger to its original position upon deactivation of the electromagnetic device. The magnetic plunger is connected to a side wall of the nozzle chamber by means of a series of springs which radially spiral out to the side walls. Preferably the springs are formed from tensional release of a deposited material. Further the deposited material can include nitride.

[0051] In accordance with a further aspect of the present invention there is provided a shuttered grill inkjet printer, wherein the shutter is electromagnetically actuated from a closed to an open position so as to allow the ejection from a chamber onto print media.

[0052] In accordance with a further aspect of the present invention there is provided a shuttered ink jet nozzle comprising an ink chamber having an ink ejection nozzle for the ejection of ink from the ink chamber, an ink reservoir for the supply of ink to the ink chamber under pressure, and a shutter device located between the ink reservoir and the ink chamber so as to allow or restrict the flow of ink between the ink chamber and ink reservoir to thereby cause the ejection of ink from the chamber, wherein the shutter device is being actuated on demand.

[0053] Further the actuator can comprise an electromagnetic coil mechanism attracting a magnetic bar. Preferably the coil is anchored to a wafer and the magnetic bar is connected to a shutter plate adapted to open and close over a series of shutter holes allowing fluid communication between the ink reservoir and the ink chamber. Advantageously the shuttered inkjet nozzle can comprise an actuator that includes at least one linear spring so as to amplify the travel of a shutter plate covering shutter holes upon activation of the actuator. The linear spring is anchored on one side of the ink chamber and the electromagnetic coil is anchored to an opposite side of the ink chamber with a shutter plate operable between the linear spring anchor and the electromagnetic anchor. Preferably the ink reservoir includes ink under oscillating ink pressure. The shutter device can comprise a plurality of shutter plates covering a corresponding plurality of shutter holes allowing the flow of ink between the ink chamber and the ink reservoir. Further the ink chamber can be formed by a crystallographic etch of a silicon wafer. The ejection frequency of drops from the nozzle chamber can be substantially half the frequency of an oscillating pressure of the ink within the ink reservoir. Advantageously, arrays of ink jet nozzles are grouped into separate groups and each group is activated in turn so as to reduce pressure requirements in the inkjet reservoir.

[0054] In accordance with a further aspect of the present invention there is provided a method of operation of a shuttered ink jet print nozzle having a nozzle chamber and ink reservoir, the ink reservoir having an oscillating ink pressure, comprising opening the shutter to cause ink to be ejected from the nozzle chamber resulting in a reduction of ink in the nozzle chamber, followed by leaving the shutter open during a subsequent high pressure of the ink pressure so as to allow the nozzle chamber to refill, followed by closing the shutter at the end of a high pressure cycle so as to restrict back flow of ink from the nozzle chamber to the ink reservoir.

[0055] In accordance with a further aspect of the present invention, an ink jet print nozzle arrangement is presented comprising an ink ejection chamber having an ejection port for the ejection of ink, which is in fluid communication with an ink reservoir for the supply of ink to be ejected, where at least one wall of the chamber comprises a moveable diaphragm actuated by means of a Lorenz force so as to cause the consequential ejection of ink from the ejection chamber. The moveable diaphragm can be of a corrugated or concertinaed form and includes an embedded conductive coil. Upon actuation of the diaphragm by the Lorenz interaction between a current in the conducted coils and a static magnetic field, the diaphragm is expandable by a concertina action. Preferably, the diaphragm is formed through utilization of an appropriately half-toned mask. The ink chamber in the ink jet print nozzle can be formed by means of an isotropic etch of a silicon wafer.

[0056] In accordance with a further aspect of the present invention there is provided an ink jet nozzle utilizing the phase transformation of a magnetostrictive material in a magnetic field as an actuator to cause the ejection of ink from the chamber. Further, the method can include a magnetostrictive petal in a quiescent state which transforms to an ink ejection state upon the application of a magnetic field thereby causing ink ejection from the chamber. Preferably the magnetic field is applied by means of passing a current through a conductive coil adjacent that magnetostrictive material. The ink chamber is formed from a crystallographic etch of the silicon wafer so as to have one surface of the chamber substantial formed by the actuator, which is attached to one wall of the chamber opposite the nozzle port from which ink is ejected. Advantageously, the nozzle port is formed by the back etching of a silicon wafer to a buried epitaxial layer and etching a nozzle port hole in the epitaxial layer. Further the crystallographic etch includes providing side-wall slots of non-etched layers of a processed silicon wafer so as to extend the dimensions of the chamber as a result of the crystallographic etch process. Preferably the magnetostrictive shape memory alloy comprises substantially Terfanol-D.

[0057] In accordance with a further aspect of the present invention there is provided an ink jet nozzle arrangement comprising a nozzle chamber having an ink ejection port in one wall of the chamber, an ink supply source , interconnected to the nozzle chamber, an electrostatic actuator to eject ink from the nozzle chamber via the ink ejection port, and a magnetic field actuation means for producing a magnetic field around the magnetostrictive actuator so as to cause magnetostrictive operation of the actuator, thereby causing the actuator to eject ink from the ink ejection port. Preferably the magnetic field actuation means comprises a conductive coil surrounding the magnetostrictive actuator. Further the ink jet nozzle arrangement can be formed on a silicon wafer utilizing semi-conductor processing techniques and the conductive coil is interconnected to a lower metal layer which provides control circuitry for the ink jet printer.

[0058] In accordance with a further aspect of the present invention there is provided a method of ejecting ink from a chamber comprising utilization of the transformation of a shape memory alloy from its martensitic phase to its auste-

nitic phase (or visa versa) as an actuator to cause the ejection of ink from the chamber. Further, the actuator can comprise a conductive shape memory alloy panel in a quiescent state which transforms to an ink injection state upon heating thereby causing ink ejection from the chamber. Preferably, the heating occurs by means of passing a current through the shape memory alloy. The chamber can be formed from a crystallographic etch of a silicon wafer so as to have one surface of the chamber substantially formed by the actuator. Advantageously, the actuator is formed from a conductive shape memory alloy arranged in a serpentine form and is attached to one wall of the chamber opposite a nozzle port from which ink is ejected. Further, the nozzle port can be formed by the back etching of a silicon wafer to the epitaxial layer and etching a nozzle port hole in the epitaxial layer. The crystallographic etch can include providing side wall slots of non-etched layers of a processed silicon wafer so as to the extend the dimensions of the chamber as a result of the crystallographic etch process. Preferably, the shape memory alloy comprises nickel titanium alloy.

[0059] In accordance with a further aspect of the present invention, there is provided an ink jet nozzle arrangement for the ejection of ink from an ink ejection nozzle comprising: a substrate; a conductive coil formed on the substrate and operable in a controlled manner; a moveable magnetic actuator surrounding the conductive coil and forming an ink nozzle chamber between the substrate and the actuator, the moveable magnetic actuator further including an ink ejection nozzle defined therein; wherein variations in the energization level of the conductive coil cause the magnetic actuator to move from a first position to a second position, thereby causing a consequential ejection of ink from the nozzle chamber as a result of fluctuations in the ink pressure within the nozzle chamber.

[0060] The arrangement can further include an ink supply channel interconnecting the nozzle chamber for the re-supply of ink to the nozzle chamber. The interconnection can comprise a series of elongated slots etched in the substrate. The substrate can comprise a silicon wafer and the ink supply channel can be etched through the wafer.

[0061] The moveable magnetic actuator can be moveable from a first position having an expanded nozzle chamber volume to a second position having a contracted nozzle chamber volume by the operation of the conductive coil. The arrangement can further include at least one resilient member attached to the moveable magnetic actuator, so as to bias the moveable magnetic actuator, in its quiescent position, at the first position. The at least one resilient member can comprise a leaf spring.

[0062] A slot can be defined between the magnetic actuator and the substrate and the actuator portions adjacent the slot can be hydaphobicaMy treated so as to minimize wicking through the slot.

[0063] A magnetic base plate located between the conductive coil and the substrate such that the magnetic actuator and the nozzle plate substantially encompasses the conductive coil. The magnetic actuator can be formed from a cobalt nickel iron alloy.

IJM Consistory Clauses

[0064] In accordance with a further aspect of the present invention, there is provided a method of manufacturing a radiant plunger ink jet print head wherein an array of nozzles are formed on a substrate utilizing planar monolithic deposition, lithographic and etching processes. Preferably, multiple ink jet heads are formed simultaneously on a single planar substrate such as a silicon wafer.

[0065] The print heads can be formed utilizing standard vlsi/ulsi processing and can include integrated drive electronics formed on the same substrate. The drive electronics preferably being of a CMOS type. In the final construction, ink can be ejected from the substrate substantially normal

[0066] In accordance with a further aspect of the present invention, there is provided a method of manufacture of an ink jet print head arrangement including a series of nozzle chambers, the method comprising the steps of: (a) utilizing an initial semiconductor wafer having an electrical circuitry layer and a buried epitaxial layer formed thereon on; (b) etching a nozzle chamber cavity in the wafer the etching stopping substantially at the epitaxial layer; (c) depositing and etching a first layer having a high saturation flux density on the electrical circuitry layer to define a first magnetic plate; (d) depositing and etching an insulating layer on the first layer and the electrical circuitry layer, the etching including etching vias for a subsequent conductive layer; (e) depositing and etching a conductive layer on the insulating layer in the form of a conductive coil conductively interconnected to the first layer; (f) depositing and etching a sacrificial material layer in the region of the first magnetic plate and the coil, the etching including defining apertures for a series of spring posts; (g) depositing and etching a second layer having a high saturation flux density so as form an interconnected second magnetic plate, series of attached springs and spring posts; (h) etching the back of the wafer to the epitaxial layer; (i) etching an ink ejection nozzle through the epitaxial layer interconnected with the nozzle chamber cavity; and (j) etching away any remaining sacrificial layers.

[0067] The step (f) further can comprise etching cavities defining a series of spring posts and the step (g) preferably can include forming a series of leaf springs interconnected with the first magnetic plate for resiliently biasing the magnetic plate in a first direction. The conductive layer can comprise substantially copper.

[0068] The etching of layers preferably can include etching vias so as to allow for the electrical interconnection of portions of subsequently layers.

[0069] The magnetic flux material can comprise substantially a cobalt nickel iron alloy and the wafer can comprise a double side polished CMOS wafer.

[0070] The steps are preferably also utilized to simultaneously separate the wafer into separate printheads.

[0071] In accordance with a further aspect of the present invention, there is provided a method of manufacturing an electrostatic ink jet print head wherein an array of nozzles are formed on a substrate utilizing planar monolithic deposition, lithographic and etching processes. Preferably, multiple ink jet heads are formed simultaneously on a single planar substrate such as a silicon wafer.

[0072] The print heads can be formed utilizing standard vlsi/ulsi processing and can include integrated drive electronics formed on the same substrate. The drive electronics preferably being of a CMOS type. In the final construction, ink can be ejected from the substrate substantially normal

[0073] In accordance with a further aspect of the present invention, there is provided a method of manufacture of an ink jet print head arrangement including a series of nozzle chambers, the method comprising the steps of: (a) utilizing an initial semiconductor wafer having an electrical circuitry layer formed thereon on; (b) forming a bottom electrode layer of conductive material on or in the electrical circuitry layer; (c) depositing and etching a first hydrophobic layer on the electrode layer; (d) depositing and etching a first sacrificial layer of sacrificial material on the first hydrophobic layer; (e) depositing and etching a top electrode layer of conductive material on the first sacrificial layer the top electrode layer including predetermined portions interconnecting with the electrical circuitry layer; (f) depositing and etching a membrane layer on the top electrode layer; (g) depositing and etching a second sacrificial layer on the membrane layer, the second sacrificial layer forming a blank for the nozzle chamber walls; (h) depositing and etching an inert material layer on the second sacrificial layer so as to form the nozzle chamber walls surrounding the nozzle chamber in addition to a nozzle fluid ejection hole interconnecting with the nozzle chamber; (i) etching an ink supply channel interconnecting with the nozzle chamber; (j) etching away the sacrificial layers so as to leave an operational device.

[0074] The top electrode layer and the membrane layer can include a concertina edge so as to allow for movement of the membrane layer. The bottom electrode layer can be formed from a metal plane layer of the circuitry layer.

[0075] The ink supply channel can be formed by etching a channel from the back surface of the wafer. The step (h) preferably can include etching a nozzle rim around the nozzle fluid ejection hole and a series of small holes in at least one wall of the nozzle chamber. The hydrophobic layer can comprise substantially polytetrafluroethylene.

[0076] The steps are preferably also utilized to simultaneously separate the wafer into separate printheads

[0077] In accordance with a further aspect of the present invention, there is provided a method of manufacturing a stacked electrostatic ink jet print head wherein an array of nozzles are formed on a substrate utilizing planar monolithic deposition, lithographic and etching processes. Preferably, multiple ink jet heads are formed simultaneously on a single planar substrate such as a silicon wafer.

[0078] The print heads can be formed utilizing standard vlsi/ulsi processing and can include integrated drive electronics formed on the same substrate. The drive electronics preferably being of a CMOS type. In the final construction, ink can be ejected from the substrate substantially normal to the substrate.

[0079] In accordance with a further aspect of the present invention, there is provided a method of manufacture of an ink jet print head arrangement including a series of nozzle chambers, the method comprising the steps of: (a) utilizing an initial semiconductor wafer having an electrical circuitry layer thereon on including etched vias for interconnection of the circuitry with subsequent layers; (b) repeatedly depositing a series of planar layers on the electrical circuitry layer the planer layers including a first conductive layer, a second conductive layer and an intermediate compressible non conductive layer; (c) etching the planar layer so as to form a series of stacked alternating structures; (d) isolating at least one first edge of a stacked alternating structure; (e) etching the second conductive layer and the intermediate compressible layer along the edge so as to expose the first conductive layer; (f) isolating a second edge of the stacked alternating structure; (g) etching the first conductive layer and the intermediate compressible layer along the second edge so as to expose the second conductive layer; (h) depositing and etching a third conductive layer having first portions interconnected along the first edge to the first conductive layer and a second portions interconnected along the second edge to the second conductive layer, the first and second portions being interconnected to corresponding portions in the electrical circuitry layer; (i) depositing and etching a sacrificial material layer on the wafer, the etching forming a mould for a subsequent nozzle chamber layer; (j) depositing and etching an inert material layer over the sacrificial layer so as to form a nozzle chamber surrounding the conductive layers in addition to an ink ejection hole; (k) etching an ink supply channel through portions of the wafer to interconnect with the nozzle chamber; and (l) etching away the sacrificial material layer.

[0080] The step (j) preferably can include etching a series of small boles in a wall of the nozzle chamber interconnecting the chamber with the ambient atmosphere. The first conductive layer and the second conductive layer are preferably formed from different conductive material. The compressible layer can comprise substantially elastomer. The method further preferably can include swelling the elastomer along the edges. The ink supply channel can be etched through the wafer from a back surface of the wafer.

[0081] The steps are preferably also utilized to simultaneously separate the wafer into separate printheads.

[0082] In accordance with a further aspect of the present invention, there is provided a method of manufacturing a reverse spring level ink jet print head wherein an array of nozzles are formed on a substrate utilizing planar monolithic deposition, lithographic and etching processes. Preferably, multiple ink jet heads are formed simultaneously on a single planar substrate such as a silicon wafer.

[0083] The print heads can be formed utilizing standard vlsi/ulsi processing and can include integrated drive electronics formed pn the same substrate. The drive electronics preferably being of a CMOS type. In the final construction, ink can be ejected from the substrate substantially normal

[0084] In accordance with a further aspect of the present invention, there is provided a method of manufacture of an inkjet print head arrangement including a series of nozzle chambers, the method comprising the steps of: (a) utilizing an initial semiconductor wafer having an electrical circuitry layer and a buried epitaxial layer formed thereon on; (b) etching a nozzle chamber cavity in the wafer the etching stopping substantially at the epitaxial layer; (c) depositing and etching a first layer having a high saturation flux density on the electrical circuitry layer to define a first magnetic plate; (d) depositing and etching an insulating layer on the first layer and the electrical circuitry layer, the etching including etching vias for a subsequent conductive layer; (e) depositing and etching a conductive layer on the insulating layer in the form of a conductive coil conductively interconnected to the first layer; (f) depositing and etching a sacrificial material layer in the region of the first magnetic plate and the coil, the etching including defining apertures for a series of spring posts, a lever arm and interconnected nozzle paddle; (g) depositing and etching a second layer having a high saturation flux density so as form an interconnected second magnetic plate, a lever arm attached to a nozzle paddle and a series of spring posts around which the lever arm pivots; (h) etching the back of the wafer to the epitaxial layer; (i) etching an ink ejection nozzle through the epitaxial layer interconnected with the nozzle chamber cavity; and (j) etching away any remaining sacrificial layers.

[0085] The step (f) further can comprise etching cavities defining a series of spring posts and the step (g) preferably can include forming a series of torsional pivot springs interconnected with the lever arm for resiliently biasing the second magnetic plate substantially against the first magnetic plate.

[0086] The conductive layer can comprise substantially copper and the magnetic flux material can comprise substantially a cobalt nickel iron alloy.

[0087] The etching of layers preferably can include etching vias so as to allow for the electrical interconnection of portions of subsequently layers.

[0088] The steps are preferably also utilized to simultaneously separate the wafer into separate printheads.

[0089] In accordance with a further aspect of the present invention, there is provided a method of manufacturing a paddle type ink jet print head wherein an array of nozzles are formed on a substrate utilizing planar monolithic deposition, lithographic and etching processes. Preferably, multiple ink jet heads are formed simultaneously on a single planar substrate such as a silicon wafer.

[0090] The print heads can be formed utilizing standard vlsi/ulsi processing and can include integrated drive electronics formed on the same substrate. The drive electronics preferably being of a CMOS type. In the final construction, ink can be ejected from the substrate substantially normal to the substrate.

[0091] In accordance with a further aspect of the present invention, there is provided a method of manufacture of an inkjet print head arrangement including a series of nozzle chambers, the method comprising the steps of: (a) utilizing an initial semiconductor wafer having an electrical circuitry layer and a buried epitaxial layer formed thereon on, in addition to a top protecting layer having a series of vias interconnected to predetermined portions of the circuitry layer; (b) forming on the semiconductor wafer layer a first conductive layer including a first conductive coil interconnected to predetermined portions of the circuitry layer; (c) depositing and etching, on the first conductive layer, a non-conductive layer including predetermined vias for the interconnection of subsequent layers with lower layers; (d) forming a second conductive layer on the nonconducting layer, including a second conductive coil and the interconnection of predetermined portions of the coil with the first conductive coil and the circuitry layer; (e) depositing and etching a second non-conductive layer over the second conductive layer the etching including etching a series of slots in the second non-conductive layer; (f) etching a series of slots through the first and second non-conductive layers, the first and second conductive layers so as to define a nozzle paddle; (g) etching the semiconductor wafer under the nozzle paddle so as to define a nozzle chamber; (h) back etching the semiconductor wafer to the epitaxial layer; and (i) etching the epitaxial layer to define a nozzle ejection hole therein interconnecting with the nozzle chamber;

[0092] The step (g) can comprise a crystallographic etch and can utilize the epitaxial layer as an etch stop.

[0093] The step (i) preferably can include etching a series of small holes in a wall of the nozzle chamber interconnecting the chamber with the ambient atmosphere.

[0094] The first conductive layer and the second conductive layer are preferably formed from substantially copper.

[0095] The steps are preferably also utilized to simultaneously separate the wafer into separate printheads.

[0096] In accordance with a further aspect of the present invention, there is provided a method of manufacturing a permanent magnet electromagnetic ink jet print head wherein an array of nozzles are formed on a substrate utilizing planar monolithic deposition, lithographic and etching processes. Preferably, multiple ink jet heads are formed simul-

taneously on a single planar substrate such as a silicon wafer.

[0097] The print heads can be formed utilizing standard vlsi/ulsi processing and can include integrated drive electronics formed on the same substrate. The drive electronics preferably being of a CMOS type. In the final construction, ink can be ejected from the substrate substantially normal to the wafer.

[0098] In accordance with a further aspect of the present invention, there is provided a method of manufacture of an ink jet print head arrangement including a series of nozzle chambers, the method comprising the steps of: (a) utilizing an initial semiconductor wafer having an electrical circuitry layer and a buried epitaxial layer formed thereon on; (b) depositing and etching a first inert layer, the etching including etching predetermined vias and a nozzle chamber aperture; (c) forming a first conductive coil layer on the first inert layer around the nozzle aperture, the conductive coil layer including predetermined portions interconnecting with the electrical circuitry layer; (d) utilizing the nozzle aperture to etch a nozzle chamber in the wafer; (e) depositing and etching a sacrificial material layer over the wafer including the nozzle chamber, the etching including etching a series a mould for a series of magnet suspension posts and a permanent magnet above the nozzle aperture; (f) deposit and etch a magnetic material layer, the magnetic material layer forming a permanent magnet above the nozzle aperture; (g) deposit and etching an inert material layer interconnecting the permanent magnet to a series of spring posts in a resilient manner; (h) back etching the wafer substantially to the buried epitaxial layer; (i) etching a nozzle fluid ejection aperture through the buried epitaxial layer; (j) etching away the sacrificial layer.

[0099] The conductive coil layer can be formed by first depositing and etching a sacrificial layer forming a mould for the conductive coil layer. The conductive coil layer can be formed utilizing chemical mechanical planarization and can comprise substantially copper.

[0100] The first inert layer can comprise substantially silicon nitride.

[0101] The steps are preferably also utilized to simultaneously separate the wafer into separate printheads.

[0102] In accordance with a further aspect of the present invention, there is provided a method of manufacturing a planar swing grill electromagnetic ink jet print head wherein an array of nozzles are formed on a substrate utilizing planar monolithic deposition, lithographic and etching processes. Preferably, multiple ink jet heads are formed simultaneously on a single planar substrate such as a silicon wafer.

[0103] The print heads can be formed utilizing standard vlsi/ulsi processing and can include integrated drive electronics formed on the same substrate. The drive electronics preferably being of a CMOS type. In the final construction, ink can be ejected from the substrate substantially normal to the substrate.

[0104] In accordance with a further aspect of the present invention, there is provided a method of manufacture of an ink jet print head arrangement including a series of nozzle chambers, the method comprising the steps of: (a) utilizing an initial semiconductor wafer having an electrical circuitry layer and a buried epitaxial layer formed thereon on; (b) etching a nozzle chamber aperture in the electrical circuitry layer interconnected with a nozzle chamber in the semiconductor wafer; (c) depositing a first sacrificial layer filling the nozzle chamber, (d) depositing and etching an inert material layer including a grill structure over the nozzle chamber aperture and vias for electrical interconnection of subsequent layers with the electrical circuitry layer; (e) depositing and etching a first conductive material layer including a lower electrical coil portion interconnected with the electrical circuitry layer; (f) depositing and etching an inert material layer over the first conductive material layer, the inert material layer including predetermined vias for interconnection of the first conductive material layer with subsequent layers; (g) depositing and etching a second sacrificial layer including etching a mould for a fixed magnetic pole, a pivot, a series of springs and spring posts; (h) depositing and etching a high saturation flux material layer to form the fixed magnetic pole, the pivot, an interconnected shutter grill lever arm and the springs and spring posts; (i) depositing and etching a second inert material layer over the high saturation flux material layer including predetermined vias for interconnection of lower layers with subsequent layers; (j) depositing and etching a second conductive material layer including a side electrical coil portion interconnected with the first conductive material layer; (k) depositing and etching a third conductive material layer including a top electrical coil portion interconnected with the side conductive material layer; (l) depositing and etching a top inert material layer as a corrosion barrier; (m) back etching the wafer to the epitaxial layer; (n) etching a nozzle aperture in the epitaxial layer; and (o) etching away the sacrificial layers.

[0105] The steps further can include the simultaneous formation of a shutter grill guard around the shutter.

[0106] The epitaxial layer can be utilized as an etch stop in the step (b) which can comprise a crystallographic etch of the wafer.

[0107] The conductive layers can comprise substantially copper and the inert layers can comprise substantially silicon nitride.

[0108] The steps are preferably also utilized to simultaneously separate the wafer into separate printheads.

[0109] In accordance with a further aspect of the present invention, there is provided a method of manufacturing a pulse magnetic field ink jet print head wherein an array of nozzles are formed on a substrate utilizing planar monolithic deposition, lithographic and etching processes. Preferably, multiple ink jet heads are formed simultaneously on a single planar substrate such as a silicon wafer.

[0110] The print heads can be formed utilizing standard vlsi/ulsi processing and can include integrated drive electronics formed on the same substrate. The drive electronics preferably being of a CMOS type. In the final construction, ink can be ejected from the substrate substantially normal

[0111] In accordance with a further aspect of the present invention, there is provided a method of manufacturing a two plate reverse firing electromagnetic ink jet print head wherein an array of nozzles are formed on a substrate utilizing planar monolithic deposition, lithographic and etching processes. Preferably, multiple ink jet heads are formed simultaneously on a single planar substrate such as a silicon wafer.

[0112] The print heads can be formed utilizing standard vlsi/ulsi processing and can include integrated drive electronics formed on the same substrate. The drive electronics preferably being of a CMOS type. In the final construction, ink can be ejected from the substrate substantially normal to the substrate.

[0113] In accordance with a further aspect of the present invention, there is provided a method of manufacture of an ink jet print head arrangement including a series of nozzle chambers, the method comprising the steps of: (a) utilizing an initial semiconductor wafer having an electrical circuitry layer formed thereon on; (b) depositing and etching a first lower fixed coil layer of conductive material having predetermined interconnections with the electrical circuitry layer; (c) depositing and etching a first protective layer over the fixed coil layer; (d) depositing and etching a second moveable coil layer of conductive material having predetermined interconnections with the electrical circuitry layer; (e) depositing and etching a second protective layer over the second moveable coil layer; (f) depositing and etching a sacrificial material layer over the second moveable coil layer; (g) depositing and etching an inert material over the sacrificial material layer to from a nozzle chamber around the first and second coil layer; (h) etching an ink supply channel interconnected with the nozzle chamber; (i) etching away the sacrificial material.

[0114] The method further preferably includes the step of forming a hydrophobic layer between the first and second coil layer.

[0115] The first and second coil layers are preferably formed in an inert material layer and are formed utilizing a dual damascene process.

[0116] The ink supply channel can be formed by etching a channel from the back surface of the wafer with the step (h) preferably including etching a series of small holes in at least one wall of the nozzle chamber.

[0117] The hydrophobic layer can comprise substantially polytetrafluroethylene. Further, the method can include the step of depositing corrosion barriers over portions of the arrangement so as to reduce corrosion effects.

[0118] The wafer can comprise a double side polished CMOS wafer.

[0119] The steps are preferably also utilized to simultaneously separate the wafer into separate printheads.

[0120] In accordance with a further aspect of the present invention, there is provided a method of manufacturing a linear stepper actuator ink jet print head wherein an array of nozzles are formed on a substrate utilizing planar monolithic deposition, lithographic and etching processes. Preferably, multiple ink jet heads are formed simultaneously on a single planar substrate such as a silicon wafer.

[0121] The print heads can be formed utilizing standard vlsi/ulsi processing and can include integrated drive electronics formed on the same substrate. The drive electronics preferably being of a CMOS type. In the final construction, ink can be ejected from the substrate substantially normal to the substrate.

[0122] In accordance with a further aspect of the present invention, there is provided a method of manufacture of an ink jet print head arrangement including a series of nozzle chambers, the method comprising the steps of: (a) utilizing an initial semiconductor wafer having an electrical circuitry formed thereon on; (b) depositing and etching a first sacrificial layer forming a lower electrical coil mould; (c) depositing and etching a first conductive material layer including a lower electrical coil portion interconnected with the electrical circuitry layer; (f) depositing and etching an inert material layer over the first conductive material layer, the inert material layer including predetermined vias for interconnection of the first conductive material layer with subsequent layers; (g) depositing and etching a second sacrificial layer including etching a mould for a fixed magnetic pole, a series of moving poles, horizontal guides and a core pusher rod; (h) depositing and etching a high saturation flux material layer to form the fixed magnetic pole, the series of moving poles, the horizontal guides and the core pusher rod; (i) depositing and etching a second inert material layer over the high saturation flux material layer including predetermined vias for interconnection of lower layers with subsequent layers; (j) depositing and etching a second conductive material layer including a side electrical coil portion interconnected with the first conductive material layer; (k) depositing and etching a third conductive material layer including a top electrical coil portion interconnected with the side conductive material layer; (l) depositing and etching a hydrophobic material layer to form a plunger element surrounding the core pusher rod; (m) depositing and etching a third sacrificial material layer to form a nozzle chamber mould; (n) depositing and etching a third layer of inert material around the plunger element forming a nozzle chamber; (o) etching an ink supply channel to the nozzle chamber; (p) etching away the sacrificial layers.

[0123] The conductive layers can comprise substantially copper and the inert layers can comprise substantially silicon nitride. The hydrophobic layer can comprise substantially polytetrafluroethylene. The wafer can comprise a double side polished CMOS wafer.

[0124] The steps are preferably also utilized to simultaneously separate the wafer into separate printheads.

[0125] In accordance with a further aspect of the present invention, there is provided a method of manufacturing a print head wherein an array of nozzles are formed on a substrate utilizing planar monolithic deposition, lithographic and etching processes. Preferably, multiple ink jet heads are formed simultaneously on a single planar substrate such as a silicon wafer.

[0126] The print heads can be formed utilizing standard vlsi/ulsi processing and can include integrated drive electronics formed on the same substrate. The drive electronics preferably being of a CMOS type. In the final construction, ink can be ejected from the substrate substantially normal

[0127] In accordance with a further aspect of the present invention, there is provided a method of manufacturing a tapered magnetic pole electromagnetic ink jet print head wherein an array of nozzles are formed on a substrate utilizing planar monolithic deposition, lithographic and etching processes. Preferably, multiple ink jet heads are formed simultaneously on a single planar substrate such as a silicon wafer.

[0128] The print heads can be formed utilizing standard vlsi/ulsi processing and can include integrated drive electronics formed on the same substrate. The drive electronics preferably being of a CMOS type. In the final construction, ink can be ejected from the substrate substantially normal to the substrate.

[0129] In accordance with a further aspect of the present invention, there is provided a method of manufacture of an ink jet print head arrangement including a series of nozzle chambers, the method comprising the steps of: (a) utilizing an initial semiconductor wafer having an electrical circuitry layer and a buried epitaxial layer formed thereon on; (b) etching a nozzle chamber cavity in the wafer the etching stopping substantially at the epitaxial layer; (c) filling the nozzle chamber cavity with a first sacrificial material layer; (d) depositing and etching a first layer having a high saturation flux density on the electrical circuitry layer to define a first magnetic plate; (e) depositing and etching an insulating layer on the first layer and the electrical circuitry layer, the etching including etching vias for a subsequent conductive layer; (f) depositing and etching a conductive layer on the insulating layer in the form of a conductive coil conductively interconnected to the first layer; (g) depositing and etching a sacrificial material layer in the region of the first magnetic plate and the coil; (h) depositing and etching a second layer having a high saturation flux density so as form a second magnetic plate over the nozzle chamber surrounded by an annulus; (i) depositing and etching an inert material layer interconnecting the magnetic plate and the annulus in a resilient manner; (j) etching the back of the wafer to the epitaxial layer; (k) etching an ink ejection nozzle through the epitaxial layer interconnected with the nozzle chamber cavity; and (k) etching away any remaining sacrificial layers.

[0130] The conductive layer can comprise substantially copper, the magnetic flux material can comprise substantially a cobalt nickel iron alloy and the inert material can comprise silicon nitride.

[0131] The method can also include the step of depositing corrosion barriers over portions of the arrangement so as to reduce corrosion effects.

[0132] The etching of layers preferably can include etching vias so as to allow for the electrical interconnection of portions of subsequently layers.

[0133] The second magnetic plate preferably can include a tapered portion adjacent the nozzle chamber.

[0134] The steps are preferably also utilized to simultaneously separate the wafer into separate printheads.

[0135] In accordance with a further aspect of the present invention, there is provided a method of manufacturing a linear spring electromagnetic grill ink jet print head wherein an array of nozzles are formed on a substrate utilizing planar monolithic deposition, lithographic and etching processes. Preferably, multiple ink jet heads are formed simultaneously on a single planar substrate such as a silicon wafer.

[0136] The print heads can be formed utilizing standard vlsi/ulsi processing and can include integrated drive electronics formed on the same substrate. The drive electronics preferably being of a CMOS type. In the final construction, ink can be ejected from the substrate substantially normal to the substrate.

[0137] In accordance with a further aspect of the present invention, there is provided a method of manufacture of an ink jet print head arrangement including a series of nozzle chambers, the method comprising the steps of: (a) utilizing an initial semiconductor wafer having an electrical circuitry layer and a buried epitaxial layer formed thereon on; (b) etching a nozzle chamber aperture in the electrical circuitry layer interconnected with a nozzle chamber in the semiconductor wafer; (c) depositing a first sacrificial layer filling the nozzle chamber; (d) depositing and etching an inert material layer including a grill structure over the nozzle chamber aperture and vias for electrical interconnection of subsequent layers with the electrical circuitry layer; (e) depositing and etching a first conductive material layer including a series of lower electrical coil portions interconnected with the electrical circuitry layer; (f) depositing and etching an inert material layer over the first conductive material layer, the inert material layer including predetermined vias for interconnection of the first conductive material layer with subsequent layers; (g) depositing and etching a second sacrificial layer including etching a mould for a solenoid, a fixed magnetic pole, and a linear spring anchor; (h) depositing and etching a high saturation flux material layer to form the series of fixed magnetic poles, a linear spring, the linear spring anchor and an interconnected shutter grill; (i) depositing and etching a second inert material layer over the high saturation flux material layer including predetermined vias for interconnection of lower layers with subsequent layers;

(j) depositing and etching a second conductive material layer including side electrical coil portions surrounding the series of fixed magnetic poles interconnected with the first conductive material layer; (k) depositing and etching a third conductive material layer including a top electrical coil portion interconnected with the side conductive material layer; (l) depositing and etching a top inert material layer as a corrosion barrier; (m) back etching the wafer to the epitaxial layer; (n) etching a nozzle aperture in the epitaxial layer; and (o) etching away the sacrificial layers.

[0138] The epitaxial layer can be utilized as an etch stop in the step (b) which can comprise a crystallographic etch of the wafer.

[0139] The high saturation flux material can comprise substantially a cobalt nickel iron alloy and the conductive layers can comprise substantially copper with the inert layers comprising substantially silicon nitride.

[0140] The steps are preferably also utilized to simultaneously separate the wafer into separate printheads.

[0141] In accordance with a further aspect of the present invention, there is provided a method of manufacturing a Lorenz diaphragm electromagnetic ink jet print head wherein an array of nozzles are formed on a substrate utilizing planar monolithic deposition, lithographic and etching processes. Preferably, multiple ink jet heads are formed simultaneously on a single planar substrate such as a silicon wafer.

[0142] The print heads can be formed utilizing standard vlsi/ulsi processing and can include integrated drive electronics formed on the same substrate. The drive electronics preferably being of a CMOS type. In the final construction, ink can be ejected from the substrate substantially normal to the substrate.

[0143] In accordance with a further aspect of the present invention, there is provided a method of manufacture of an ink jet print head arrangement including a series of nozzle chambers, the method comprising the steps of: (a) utilizing an initial semiconductor wafer having an electrical circuitry layer and a buried epitaxial layer formed thereon on; (b) etching a nozzle chamber cavity in the wafer the etching stopping substantially at the epitaxial layer; (c) depositing and etching a first layer of sacrificial material, filling the nozzle chamber cavity, the etching including etching a series of concertinaed ridges in the sacrificial layer above the nozzle chamber cavity; (d) depositing and etching a first inert material layer on the concertinaed ridges, the first inert material layer retaining a series of concertined ridges on the surface thereof; (e) depositing and etching a first conductive material layer over the concertinead ridges of the first inert material layer to form a coil layer having a series of concertianed wire portions over the nozzle cavity; (d) depositing and etching a second inert material layer on the first conductive material layer, the second first inert material layer retaining a series of concertined ridges on the surface thereof; (e) etching the back of the wafer to the epitaxial layer; (f) etching an ink ejection nozzle through the epitaxial layer interconnected with the nozzle chamber cavity; and (g) etching away any remaining sacrificial layers.

[0144] The inert material layers can comprise substantially silicon nitride and the conductive layer can comprise substantially copper.

[0145] The etching of layers preferably can include etching vias so as to allow for the electrical interconnection of portions of subsequently layers.

[0146] The steps are preferably also utilized to simultaneously separate the wafer into separate printheads.

[0147] In accordance with a further aspect of the present invention, there is provided a method of manufacturing a PTFE surface shooting shuttered oscillating pressure ink jet print head wherein an array of nozzles are formed on a substrate utilizing planar monolithic deposition, lithographic and etching processes. Preferably, multiple ink jet heads are formed simultaneously on a single planar substrate such as a silicon wafer.

[0148] The print heads can be formed utilizing standard vlsi/ulsi processing and can include integrated drive electronics formed on the same substrate. The drive electronics preferably being of a CMOS type. In the final construction, ink can be ejected from the substrate substantially normal to the substrate.

[0149] In accordance with a further aspect of the present invention, there is provided a method of manufacture of an inkjet print head arrangement including a series of nozzle chambers, the method comprising the steps of: (a) utilizing an initial semiconductor wafer having an electrical circuitry layer formed thereon on; (b) etching a nozzle inlet hole in the electrical circuitry layer; (c) depositing and etching a first sacrificial material layer over the electrical circuitry layer including filling the nozzle inlet hole, the etching including etching an actuator anchor area in the first sacrificial material layer; (d) depositing and etching a first expansion material layer of a material having a high coefficient of thermal expansion, the etching including etching predetermined vias in the first expansion material layer; (e) depositing and etching a first conductive layer on the first expansion material layer, the first conductive material layer being conductively interconnected to the electrical circuitry layer via the vias; (f) depositing and etching a second expansion material layer of a material having a high coefficient of thermal expansion, the etching including forming a moveable paddle element from the combination of the first and second expansion material layers and the first conductive layer; (g) depositing and etching a second sacrificial material layer, the etching forming a nozzle chamber mould; (h) depositing and etching an inert material layer over the sacrificial material layer so as to form a nozzle chamber around the moveable paddle, the etching including etching a nozzle ejection aperture in the inert material layer, (i) etching an ink supply channel through the wafer; and (j) etching away the sacrificial layers.

[0150] The step (h) preferably can include etching a series of small holes in the inert material layer.

[0151] The first and second expansion material layers can comprise substantially polytetrafluroethylene and the inert material layer can comprise substantially silicon nitride.

[0152] The ink supply channel can be formed by etching a channel from the back surface of the wafer which can comprise a double side polished CMOS wafer.

[0153] The steps are preferably also utilized to simultaneously separate the wafer into separate printheads.

[0154] In accordance with an aspect of the present invention, there is provided a method of manufacturing a magnetostrictive ink jet print head wherein an array of nozzles are formed on a substrate utilizing planar monolithic deposition, lithographic and etching processes. Preferably, multiple ink jet heads are formed simultaneously on a single planar substrate such as a silicon wafer.

[0155] The print heads can be formed utilizing standard vlsi/ulsi processing and can include integrated drive electronics formed on the same substrate. The drive electronics preferably being of a CMOS type. In the final construction, ink can be ejected from the substrate substantially normal

[0156] In accordance with an aspect of the present invention, there is provided a method of manufacturing a shape memory alloy print head wherein an array of nozzles are formed on a substrate utilizing planar monolithic deposition, lithographic and etching processes. Preferably, multiple ink jet heads are formed simultaneously on a single planar substrate such as a silicon wafer.

[0157] The print heads can be formed utilizing standard vlsi/ulsi processing and can include integrated drive electronics formed on the same substrate. The drive electronics preferably being of a CMOS type. In the final construction, ink can be ejected from the substrate substantially normal to said substrate.

[0158] In accordance with a further aspect of the present invention, there is provided a method of manufacture of an ink jet print head arrangement including a series of nozzle chambers, the method comprising the steps of: (a) utilizing an initial semiconductor wafer having an electrical circuitry layer and a buried epitaxial layer formed thereon on; (b) etching a nozzle chamber in the wafer and the electrical circuitry layer; (c) depositing and etching a layer of sacrificial material, filling the nozzle chamber; (d) depositing and etching a layer of shape memory alloy forming a conductive paddle structure over the nozzle chamber attached to the electrical circuitry layer; (e) back etching the semiconductor wafer to the epitaxial layer; (f) etching the epitaxial layer to define a nozzle ejection hole therein interconnecting with the nozzle chamber; (g) etching away the sacrificial layers.

[0159] The step (b) utilizes the epitaxial layer as an etch stop and can comprise a crystallographic etch. The shape memory alloy can comprise substantially nitinol.

[0160] The steps are preferably also utilized to simultaneously separate the wafer into separate printheads.

[0161] In accordance with an aspect of the present invention, there is provided a method of manufacture of a Coil Actuated Magnetic Plate Ink Jet Printer print head wherein an array of nozzles are formed on a substrate utilizing planar monolithic deposition, lithographic and etching processes.

[0162] Multiple ink jet heads are preferably formed simultaneously on a single planar substrate. The substrate can be a silicon wafer.

[0163] The print heads are preferably formed utilizing standard vlsi/ulsi processing. Integrated drive electronics are preferably formed on the same substrate. The integrated drive electronics can comprise a CMOS process.

[0164] Ink can be ejected from the substrate substantially normal to the substrate.

[0165] In accordance with a further aspect of the present invention, there is provided a method of manufacture of an ink jet print head arrangement including a series of nozzle chambers, the method comprising the steps of: (a) utilizing an initial semiconductor wafer having an electrical circuitry layer formed thereon on; (b) etching a series of slots in at least the circuitry layer to define a nozzle cavity inlet; (c) depositing and etching a first layer of magnetic flux material on the electrical circuitry layer to define a first magnetic plate; (d) depositing and etching a insulating layer on the first layer and the electrical circuitry layer, the etching including etching vias for a subsequent conductive layer; (e) depositing and etching a conductive layer in for form of a conductive coil conductively interconnected to the electrical circuitry layer; (f) depositing and etching a hydrophobic material layer in the region of the conductive coil; (g) depositing and etching a sacrificial material layer in the region of the first magnetic plate and the coil, the etching including defining a cavity for the walls of a nozzle chamber; (h) depositing and etching a second layer of magnetic flux material over the sacrificial material so as to substantially enclose the conductive coil; (i) etching away the sacrificial material; (j) etching an ink supply channel through the wafer to form a fluid communication with the nozzle chamber.

[0166] The step (g) further can comprise etching cavities defining a series of spring posts and the step (h) preferably can includes forming a series of leaf springs interconnected with the first magnetic plate for resiliently biasing the magnetic plate in a first direction. The conductive layer can comprise substantially copper. The step (j) can comprise a through wafer etch from a back surface of the wafer.

[0167] The method can further include the step of depositing corrosion barriers over portions of the arrangement so as to reduce corrosion effects and the etching of layers preferably can includes etching via so as to allow for the electrical interconnection of portions of subsequently layers.

[0168] The magnetic flux material can comprise substantially a cobalt nickel iron alloy and the wafer can comprise

a double side polished CMOS wafer.

[0169] The steps are preferably also utilized to simultaneously separate the wafer into separate printheads.

Brief Description of the Drawings

[0170] Notwithstanding any other forms which may fall within the scope of the present invention, preferred forms of the invention will now be described, by way of example only, with reference to the accompanying drawings in which:

Fig. 1 is an exploded perspective view illustrating the construction of a single ink jet nozzle in accordance with an embodiment of the present invention;
Fig. 2 is a timing diagram illustrating the operation of an embodiment;
Fig. 3 is a cross-sectional top view of a single ink nozzle constructed in accordance with an embodiment of the present invention;
Fig. 4 provides a legend of the materials indicated in Fig. 5 to Fig. 21;
Fig. 5 to Fig. 21 illustrate sectional views of the manufacturing steps in one form of construction of an ink jet printhead nozzle;
Fig. 22 is a perspective cross-sectional view of a single ink jet nozzle constructed in accordance with an embodiment;
Fig. 23 is a close-up perspective cross-sectional view (portion A of Fig. 22), of a single ink jet nozzle constructed in accordance with an embodiment;
Fig. 24 is an exploded perspective view illustrating the construction of a single ink jet nozzle in accordance with an embodiment;
Fig. 25 provides a legend of the materials indicated in Fig. 26 to Fig. 36; and
Fig. 26 to Fig. 36 illustrate sectional views of the manufacturing steps in one form of construction of an ink jet printhead nozzle.
Fig. 37 is a perspective view through a single ink jet nozzle constructed in accordance with an embodiment of the present invention;
Fig. 38 is a schematic cross-sectional view of the ink nozzle constructed in accordance with an embodiment of the present invention, with the actuator in its quiescent stale;
Fig. 39 is a schematic cross-sectional view of the ink nozzle immediately after activation of the actuator.
Fig. 40 is a schematic cross-sectional view illustrating the ink jet nozzle ready for firing;
Fig. 41 is a schematic cross-sectional view of the ink nozzle immediately after deactivation of the actuator;
Fig. 42 is a perspective view, in part exploded, of the actuator of a single ink jet nozzle constructed in accordance with an embodiment of the present invention;
Fig. 43 is an exploded perspective view illustrating the construction of a single ink jet nozzle in accordance with an embodiment of the present invention;
Fig. 44 provides a legend of the materials indicated in Fig. 45 to Fig. 58; and
Fig. 45 to Fig. 58 illustrate sectional views of the manufacturing steps in one form of construction of an ink jet printhead nozzle.
Fig. 59 is an exploded perspective view illustrating the construction of a single ink jet nozzle in accordance with an embodiment;
Fig. 60 is a perspective view, in part in section, of a single ink jet nozzle constructed in accordance with an embodiment;
Fig. 61 provides a legend of the materials indicated in Fig. 62 to Fig. 78; and
Fig. 62 to Fig. 78 illustrate sectional views of the manufacturing steps in one form of construction of an ink jet printhead nozzle.
Fig. 79 is a cross-sectional view of a single ink jet nozzle constructed in accordance with an embodiment in its quiescent state;
Fig. 80 is a cross-sectional view of a single ink jet nozzle constructed in accordance with an embodiment, illustrating the state upon activation of the actuator;
Fig. 81 is an exploded perspective view illustrating the construction of a single ink jet nozzle in accordance with an embodiment;
Fig. 82 provides a legend of the materials indicated in Fig. 83 to Fig. 93; and
Fig. 83 to Fig. 93 illustrate sectional views of the manufacturing steps in one form of construction of an ink jet printhead nozzle.
Fig. 94 is a perspective cross-sectional view of a single ink jet nozzle constructed in accordance with an embodiment;
Fig. 95 is an exploded perspective view illustrating the construction of a single inkjet nozzle in accordance with an

embodiment;
Fig. 96 provides a legend of the materials indicated in Fig. 97 to Fig. 111; and
Fig. 97 to Fig. 111 illustrate sectional views of the manufacturing steps in one form of construction of an ink jet printhead nozzle.
Fig. 112 is a perspective view of a single ink jet nozzle constructed in accordance with an embodiment, with the shutter means in its closed position;
Fig. 113 is a perspective view of a single ink jet nozzle constructed in accordance with an embodiment, with the shutter means in its open position;
Fig. 114 is an exploded perspective view illustrating the construction of a single inkjet nozzle in accordance with an embodiment;
Fig. 115 provides a legend of the materials indicated in Fig. 116 to Fig. 137; and
Fig. 116 to Fig. 137 illustrate sectional views of the manufacturing steps in one form of construction of an ink jet printhead nozzle.
Fig. 138 is a perspective, partly sectional view of a single ink jet nozzle in its quiescent position constructed in accordance with an embodiment;
Fig. 139 is a perspective, partly sectional view of a single ink jet nozzle in its firing position constructed in accordance with an embodiment;
Fig. 140 is an exploded perspective illustrating the construction of a single inkjet nozzle in accordance with an embodiment;
Fig. 141 provides a legend of the materials indicated in Fig. 142 to Fig. 156; and
Fig. 142 to Fig. 156 illustrate sectional views of the manufacturing steps in one form of construction of an inkjet printhead nozzle.
Fig. 157 is a cross sectional view of a single ink jet nozzle as constructed in accordance with an embodiment in its quiescent state;
Fig. 158 is a cross sectional view of a single ink jet nozzle as constructed in accordance with an embodiment after reaching its stop position;
Fig. 159 is a cross sectional view of a single ink jet nozzle as constructed in accordance with an embodiment in the keeper face position;
Fig. 160 is a cross sectional view of a single ink jet nozzle as constructed in accordance with an embodiment after de-energizing from the keeper level.
Fig. 161 is an exploded perspective view illustrating the construction of an embodiment;
Fig. 162 is the cut out topside view of a single ink jet nozzle constructed in accordance with an embodiment in the keeper level;
Fig. 163 provides a legend of the materials indicated in Fig. 164 to Fig. 183; and
Fig. 164 to Fig. 183 illustrate sectional views of the manufacturing steps in one form of construction of an inkjet printhead nozzle.
Fig. 184 is a cut-out top view of an ink jet nozzle in accordance with an embodiment;
Fig. 185 is an exploded perspective view illustrating the construction of a single ink jet nozzle in accordance with an embodiment;
Fig. 186 provides a legend of the materials indicated in Fig. 187 to Fig. 207; and
Fig. 187 to Fig. 207 illustrate sectional views of the manufacturing steps in one form of construction of an ink jet printhead nozzle.
Fig. 208 is a cut-out top perspective view of the ink nozzle in accordance with an embodiment of the present invention;
Fig. 209 is an exploded perspective view illustrating the shutter mechanism in accordance with an embodiment of the present invention;
Fig. 210 is a top cross-sectional perspective view of the ink nozzle constructed in accordance with an embodiment of the present invention;
Fig. 211 provides a legend of the materials indicated in Fig. 212 to Fig. 225; and
Fig. 212 to Fig. 226 illustrate sectional views of the manufacturing steps in one form of construction of an inkjet printhead nozzle.
Fig. 227 is a perspective cross-sectional view of a single ink jet nozzle constructed in accordance with an embodiment;
Fig. 228 is an exploded perspective view illustrating the construction of a single ink jet nozzle in accordance with an embodiment;
Fig. 229 provides a legend of the materials indicated in Fig. 230 to Fig. 248; and
Fig. 230 to Fig. 248 illustrate sectional views of the manufacturing steps in one form of construction of an ink jet printhead nozzle.

Fig. 249 is a perspective view of a single ink jet nozzle constructed in accordance with an embodiment, in its closed position;
Fig. 250 is a perspective view of a single ink jet nozzle constructed in accordance with an embodiment, in its open position;
Fig. 251 is a perspective, cross-sectional view taking along the line II of Fig. 250, of a single ink jet nozzle in accordance with an embodiment;
Fig. 252 is an exploded perspective view illustrating the construction of a single ink jet nozzle in accordance with an embodiment;
Fig. 253 provides a legend of the materials indicated in Fig. 254 to Fig. 275; and
Fig. 254 to Fig. 275 illustrate sectional views of the manufacturing steps in one form of construction of an ink jet printhead nozzle.
Fig. 276 is a schematic top view of a single ink jet nozzle chamber apparatus constructed in accordance with an embodiment;
Fig. 277 is a top cross-sectional view of a single ink jet nozzle chamber apparatus with the diaphragm in its activated stage;
Fig. 278 is a schematic cross-sectional view illustrating the exposure of a resist layer through a halftone mask;
Fig. 279 is a schematic cross-sectional view illustrating the resist layer after development exhibiting a corrugated pattern;
Fig. 280 is a schematic cross-sectional view illustrating the transfer of the corrugated pattern onto the substrate by etching;
Fig. 281 is a schematic cross-sectional view illustrating the construction of an embedded, corrugated, conduction layer; and
Fig. 282 is an exploded perspective view illustrating the construction of a single ink jet nozzle in accordance with an embodiment.
Fig. 283 is a perspective view of the heater traces used in a single ink jet nozzle constructed in accordance with an embodiment.
Fig. 284 provides a legend of the materials indicated in Fig. 285 to Fig. 296; and
Fig. 285 to Fig. 296 illustrate sectional views of the manufacturing steps in one form of construction of an inkjet printhead nozzle.
Fig. 297 is a perspective cross-sectional view of a single ink jet nozzle constructed in accordance with an embodiment;
Fig. 298 is an exploded perspective view illustrating the construction of a single ink jet nozzle in accordance with an embodiment;
Fig. 299 provides a legend of the materials indicated in Fig. 300 to Fig. 311; and
Fig. 300 to Fig. 311 illustrate sectional views of the manufacturing steps in one form of construction of an ink jet printhead nozzle.
Fig. 312 is an exploded perspective view of a single ink jet nozzle as constructed in accordance with an embodiment;
Fig. 313 is a top cross sectional view of a single ink jet nozzle in its quiescent state taken along line A-A in Fig. 312;
Fig. 314 is a top cross sectional view of a single ink jet nozzle in its actuated state taken along line A-A in Fig. 312;
Fig. 315 provides a legend of the materials indicated in Fig. 316 to Fig. 326; and
Fig. 316 to Fig. 326 illustrate sectional views of the manufacturing steps in one form of construction of an ink jet printhead nozzle.
Fig. 327 to Fig. 329 are schematic illustrations of the operation of an ink jet nozzle arrangement of an embodiment.
Fig. 330 illustrates a side perspective view, partly in section, of a single ink jet nozzle arrangement of an embodiment;
Fig. 331 provides a legend of the materials indicated in Fig. 332 to Fig. 347;
Fig. 332 to Fig. 347 illustrate sectional views of the manufacturing steps in one form of construction of an ink jet printhead nozzle;

Description of the Preferred and Other Embodiments

[0171] The preferred embodiments and other embodiments will be discussed under separate headings with the heading including an IJ number for ease of reference. The headings also include a type designator with T indicating thermal, S indicating shutter type and F indicating a field type.

Description of IJ01 F

[0172] In Fig. 1, there is illustrated an exploded perspective view illustrating the construction of a single ink jet nozzle 4 in accordance with the principles of the present invention.

[0173] The nozzle 4 operates on the principle of electro-mechanical energy conversion and comprises a solenoid 11 which is connected electrically at a first end 12 to a magnetic plate 13 which is in turn connected to a current source e.g. 14 utilized to activate the ink nozzle 4. The magnetic plate 13 can be constructed from electrically conductive iron.

[0174] A second magnetic plunger 15 is also provided, again being constructed from soft magnetic iron. Upon energizing the solenoid 11, the plunger 15 is attracted to the fixed magnetic plate 13. The plunger thereby pushes against the ink within the nozzle 4 creating a high pressure zone in the nozzle chamber 17. This causes a movement of the ink in the nozzle chamber 17 and in a first design, subsequent ejection of an ink drop. A series of apertures e.g. 20 is provided so that ink in the region of solenoid 11 is squirted out of the holes 20 in the top of the plunger 15 as it moves towards lower plate 13. This prevents ink trapped in the area of solenoid 11 from increasing the pressure on the plunger 15 and thereby increasing the magnetic forces needed to move the plunger 15.

[0175] Referring now to Fig. 2, there is illustrated 30 a timing diagram of the plunger current control signal. Initially, the solenoid current is activated 31 for the movement of the plunger and ejection of a drop from the ink nozzle. After approximately 2 micro-seconds, the current to the solenoid is turned off. At the same time or at a slightly later time 32, a reverse current is applied having approximately half the magnitude of the forward current. As the plunger has a residual magnetism, the reverse current 32 causes the plunger to move backwards towards its original position. A series of torsional springs 22, 23 (Fig. 1) also assists in the return of the plunger to its original position. The reverse current is turned off before the magnetism of the plunger 15 is reversed which would otherwise result in the plunger being attracted to the fixed plate again. Returning to Fig. 1, the forced return of the plunger 15 to its quiescent position results in a low pressure in the chamber 17. This can cause ink to begin flowing from the outlet nozzle 24 inwards and also ingests air to the chamber 17. The forward velocity of the drop and the backward velocity of the ink in the chamber 17 are resolved by the ink drop breaking off around the nozzle 24. The ink drop then continues to travel toward the recording medium under its own momentum. The nozzle refills due to the surface tension of the ink at the nozzle tip 24. Shortly after the time of drop break off, a meniscus at the nozzle tip is formed with an approximately a concave hemispherical surface. The surface tension will exert a net forward force on the ink which will result in nozzle refilling. The repetition rate of the nozzle 4 is therefore principally determined by the nozzle refill time which will be 100micro-seconds, depending on the device geometry, ink surface tension and the volume of the ejected drop.

[0176] Turning now to Fig. 3, an important aspect of the operation of the electro-magnetically driven print nozzle will now be described. Upon a current flowing through the coil 11, the plate 15 becomes strongly attracted to the plate 13. The plate 15 experiences a downward force and begins movement towards the plate 13. This movement imparts a momentum to the ink within the nozzle chamber 17. The ink is subsequently ejected as hereinbefore described. Unfortunately, the movement of the plate 15 causes a build-up of pressure in the area 64 between the plate 15 and the coil 11. This build-up would normally result in a reduced effectiveness of the plate 15 in ejecting ink.

[0177] However, in a first design the plate 15 preferably includes a series of apertures e.g. 20 which allow for the flow of ink from the area 64 back into the ink chamber and thereby allow a reduction in the pressure in area 64. This results in an increased effectiveness in the operation of the plate 15.

[0178] Preferably, the apertures 20 are of a teardrop shape increasing in diameter with increasing radial distance of the plunger. The aperture profile thereby providing minimal disturbance of the magnetic flux through the plunger while maintaining structural integrity of plunger 15.

[0179] After the plunger 15 has reached its end position, the current through coil 11 is reversed resulting in a repulsion of the two plates 13, 15. Additionally, the torsional spring e.g. 23 acts to return the plate 15 to its initial position.

[0180] The use of a torsional spring e.g. 23 has a number of substantial benefits including a compact layout, and the construction of the torsional spring from the same material and same processing steps as that of the plate 15.

[0181] In an alternative design, the top surface of plate 15 does not include a series of apertures. Rather, the inner radial surface 25 of plate 15 comprises slots of substantially constant cross-sectional profile in fluid communication between the nozzle chamber 17 and the area 64 between plate 15 and the solenoid 11. Upon activation of the coil 11, the plate 15 is attracted to the armature plate 13 and experiences a force directed towards plate 13. As a result of the movement, fluid in the area 64 is compressed and experiences a higher pressure than its surrounds. As a result, the flow of fluid takes place out of the slots in the inner radial surface 25 plate 15 into the nozzle chamber 17. The flow of fluid into chamber 17, in addition to the movement of the plate 15, causes the ejection of ink out of the ink nozzle port 24. Again, the movement of the plate 15 causes the torsional springs, for example 23, to be resiliently deformed. Upon completion of the movement of the plate 15, the coil 11 is deactivated and a slight reverse current is applied. The reverse current acts to repel the plate 15 from the armature plate 13. The torsional springs, for example 23, act as additional means to return the plate 15 to its initial or quiescent position.

Fabrication

[0182] Returning now to Fig. 1, the nozzle apparatus is constructed from the following main parts including a nozzle tip 40 having an aperture 24 which can be constructed from boron doped silicon. The radius of the aperture 24 of the nozzle tip is an important determinant of drop velocity and drop size.

[0183] Next, a CMOS silicon layer 42 is provided upon which is fabricated all the data storage and driving circuitry 41 necessary for the operation of the nozzle 4. In this layer a nozzle chamber 17 is also constructed. The nozzle chamber 17 should be wide enough so that viscous drag from the chamber walls does not significantly increase the force required of the plunger. It should also be deep enough so that any air ingested through the nozzle port 24 when the plunger returns to its quiescent state does not extend to the plunger device. If it does, the ingested bubble may form a cylindrical surface instead of a hemispherical surface resulting in the nozzle not refilling properly. A CMOS dielectric and insulating layer containing various current paths parts for the current connection to the plunger device is also provided 44.

[0184] Next, a fixed plate of ferroelectric material is provided having two parts 13, 46. The two parts 13, 46 are electrically insulated from one another.

[0185] Next, a solenoid 11 is provided. This can comprise a spiral coil of deposited copper. Preferably a single spiral layer is utilized to avoid fabrication difficulty and copper is used for a low resistivity and high electro-migration resistance.

[0186] Next, a plunger 15 of ferromagnetic material is provided to maximize the magnetic force generated. The plunger 15 and fixed magnetic plate 13, 46 surround the solenoid 11 as a torus. Thus, little magnetic flux is lost and the flux is concentrated around the gap between the plunger 15 and the fix plate 13, 46.

[0187] The gap between the fixed plate 13, 46 and the plunger 15 is one of the most important "parts" of the print nozzle 4. The size of the gap will strongly affect the magnetic force generated, and also limits the travel of the plunger 15. A small gap is desirable to achieve a strong magnetic force, but a large gap is desirable to allow longer plunger 15 to travel, and therefore allow smaller plunger radius to be utilized.

[0188] Next, the springs, e.g. 22, 23 for returning to the plunger 15 to its quiescent position after a drop has been ejected are provided. The springs, e.g. 22, 23 can be fabricated from the same material, and in the same processing steps, as the plunger 15. Preferably the springs, e.g. 22, 23 act as torsional springs in their interaction with the plunger 15.

[0189] Finally, all surfaces are coated with passivation layers, which may be silicon nitride (Si_3N_4), diamond like carbon (DLC), or other chemically inert, highly impermeable layer. The passivation layers are especially important for device lifetime, as the active device will be immersed in the ink.

[0190] One form of detailed manufacturing process which can be used to fabricate monolithic ink jet print heads operating in accordance with the principles taught by the present embodiment can proceed utilizing the following steps:

1. Using a double sided polished wafer deposit 3 microns of epitaxial silicon heavily doped with boron.
2. Deposit 10 microns of epitaxial silicon, either p-type or n-type, depending upon the CMOS process used.
3. Complete a 0.5 micron, one poly, 2 metal CMOS process. This step is shown in Fig. 5. For clarity, these diagrams may not be to scale, and may not represent a cross section though any single plane of the nozzle. Fig. 4 is a key to representations of various materials in these manufacturing diagrams, and those of other cross referenced ink jet configurations.
4. Etch the CMOS oxide layers down to silicon or aluminum using Mask 1. This mask defines the nozzle chamber, the edges of the print heads chips, and the vias for the contacts from the aluminum electrodes to the two halves of the split fixed magnetic plate.
5. Plasma etch the silicon down to the boron doped buried layer, using oxide from step 4 as a mask. This etch does not substantially etch the aluminum. This step is shown in Fig. 6.
6. Deposit a seed layer of cobalt nickel iron alloy. CoNiFe is chosen due to a high saturation flux density of 2 Tesla, and a low coercivity. [Osaka, Tetsuya et al, A soft magnetic CoNiFe film with high saturation magnetic flux density, Nature 392, 796-798 (1998)].
7. Spin on 4 microns of resist, expose with Mask 2, and develop. This mask defines the split fixed magnetic plate, for which the resist acts as an electroplating mold. This step is shown in Fig. 7.
8. Electroplate 3 microns of CoNiFe. This step is shown in Fig. 8.
9. Strip the resist and etch the exposed seed layer. This step is shown in Fig. 9.
10. Deposit 0.1 microns of silicon nitride (Si_3N_4).
11. Etch the nitride layer using Mask 3. This mask defines the contact vias from each end of the solenoid coil to the two halves of the split fixed magnetic plate.
12. Deposit a seed layer of copper. Copper is used for its low resistivity (which results in higher efficiency) and its high electromigration resistance, which increases reliability at high current densities.
13. Spin on 5 microns of resist, expose with Mask 4, and develop. This mask defines the solenoid spiral coil and

the spring posts, for which the resist acts as an electroplating mold. This step is shown in Fig. 10.
14. Electroplate 4 microns of copper.
15. Strip the resist and etch the exposed copper seed layer. This step is shown in Fig. 11.
16. Wafer probe. All electrical connections are complete at this point, bond pads are accessible, and the chips are not yet separated.
17. Deposit 0.1 microns of silicon nitride.
18. Deposit 1 micron of sacrificial material. This layer determines the magnetic gap.
19. Etch the sacrificial material using Mask 5. This mask defines the spring posts. This step is shown in Fig. 12.
20. Deposit a seed layer of CoNiFe.
21. Spin on 4.5 microns of resist, expose with Mask 6, and develop. This mask defines the walls of the magnetic plunger, plus the spring posts. The resist forms an electroplating mold for these parts. This step is shown in Fig. 13.
22. Electroplate 4 microns of CoNiFe. This step is shown in Fig. 14.
23. Deposit a seed layer of CoNiFe.
24. Spin on 4 microns of resist, expose with Mask 7, and develop. This mask defines the roof of the magnetic plunger, the springs, and the spring posts. The resist forms an electroplating mold for these parts. This step is shown in Fig. 15.
25. Electroplate 3 microns of CoNiFe. This step is shown in Fig. 16.
26. Mount the wafer on a glass blank and back-etch the wafer using KOH, with no mask. This etch thins the wafer and stops at the buried boron doped silicon layer. This step is shown in Fig. 17.
27. Plasma back-etch the boron doped silicon layer to a depth of (approx.) 1 micron using Mask 8. This mask defines the nozzle rim. This step is shown in Fig. 18.
28. Plasma back-etch through the boron doped layer using Mask 9. This mask defines the nozzle, and the edge of the chips. At this stage, the chips are separate, but are still mounted on the glass blank. This step is shown in Fig. 19.
29. Detach the chips from the glass blank. Strip all adhesive, resist, sacrificial, and exposed seed layers. This step is shown in Fig. 20.
30. Mount the print heads in their packaging, which may be a molded plastic former incorporating ink channels which supply different colors of ink to the appropriate regions of the front surface of the wafer.
31. Connect the print heads to their interconnect systems.
32. Hydrophobize the front surface of the print heads.
33. Fill the completed print heads with ink and test them. A filled nozzle is shown in Fig. 21.

Description of IJ02 F

[0191] In an embodiment, an ink jet print head is made up of a plurality of nozzle chambers each having an ink ejection port. Ink is ejected from the ink ejection port through the utilisation of attraction between two parallel plates.

[0192] Turning to Fig. 22, there is illustrated a cross-sectional view of a single nozzle arrangement 110 as constructed in accordance with an embodiment. The nozzle arrangement 110 includes a nozzle chamber 111 in which is stored ink to be ejected out of an ink ejection port 112. The nozzle arrangement 110 can be constructed on the top of a silicon wafer utilising micro electro-mechanical systems construction techniques as will become more apparent hereinafter. The top of the nozzle plate also includes a series of regular spaced etchant holes, e.g. 113 which are provided for efficient sacrificial etching of lower layers of the nozzle arrangement 110 during construction. The size of the etchant holes 113 is small enough that surface tension characteristics prohibit ejection from the holes 113 during operation.

[0193] Ink is supplied to the nozzle chamber 111 via an ink supply channel, e.g. 115.

[0194] Turning now to Fig. 23, there is illustrated a cross-sectional view of one side of the nozzle arrangement 110. A nozzle arrangement 110 is constructed on a silicon wafer base 117 on top of which is first constructed a standard CMOS two level metal layer 118 which includes the required drive and control circuitry for each nozzle arrangement. The layer 118, which includes two levels of aluminium, includes one level of aluminium 119 being utilised as a bottom electrode plate. Other portions of this layer 120 can comprise nitride passivation. On top of the layer 119 there is provided a thin polytetrafluoroethylene (PTFE) layer 121.

[0195] Next, an air gap 127 is provided between the top and bottom layers. This is followed by a further PTFE layer 128 which forms part of the top plate 122. The two PTFE layers 121, 128 are provided so as to reduce possible stiction effects between the upper and lower plates. Next, a top aluminium electrode layer 130 is provided followed by a nitride layer (not shown) which provides structural integrity to the top electro plate. The layers 128 - 130 are fabricated so as to include a corrugated portion 123 which concertinas upon movement of the top plate 122.

[0196] By placing a potential difference across the two aluminum layers 119 and 130, the top plate 122 is attracted to bottom aluminum layer 119 thereby resulting in a movement of the top plate 122 towards the bottom plate 119. This results in energy being stored in the concertinaed spring arrangement 123 in addition to air passing out of the side air

holes, e.g. 133 and the ink being sucked into the nozzle chamber as a result of the distortion of the meniscus over the ink ejection port 112 (Fig. 22). Subsequently, the potential across the plates is eliminated thereby causing the concertinaed spring portion 123 to rapidly return the plate 122 to its rest position. The rapid movement of the plate 122 causes the consequential ejection of ink from the nozzle chamber via the ink ejection port 112 (Fig. 22). Additionally, air flows in via air gap 133 underneath the plate 122.

[0197] The ink jet nozzles of an embodiment can be formed from utilisation of semi-conductor fabrication and MEMS techniques. Turning to Fig. 24, there is illustrated an exploded perspective view of the various layers in the final construction of a nozzle arrangement 110. At the lowest layer is the silicon wafer 117 upon which all other processing steps take place. On top of the silicon layer 117 is the CMOS circuitry layers 118 which primarily comprises glass. On top of this layer is a nitride passivation layer 120 which is primarily utilized to passivate and protect the lower glass layer from any sacrificial process that may be utilized in the building up of subsequent layers. Next there is provided the aluminum layer 119 which, in the alternative, can form part of the lower CMOS glass layer 118. This layer 119 forms the bottom plate. Next, two PTFE layers 126, 128 are provided between which is laid down a sacrificial layer, such as glass, which is subsequently etched away so as to release the plate 122 (Fig. 23). On top of the PTFE layer 128 is laid down the aluminum layer 130 and a subsequent thicker nitride layer (not shown) which provides structural support to the top electrode stopping it from sagging or deforming. After this comes the top nitride nozzle chamber layer 135 which forms the rest of the nozzle chamber and ink supply channel. The layer 135 can be formed from the depositing and etching of a sacrificial layer and then depositing the nitride layer, etching the nozzle and etchant holes utilizing an appropriate mask before etching away the sacrificial material.

[0198] Obviously, print heads can be formed from large arrays of nozzle arrangements 110 on a single wafer which is subsequently diced into separate print heads. Ink supply can be either from the side of the wafer or through the wafer utilizing deep anisotropic etching systems such as high density low pressure plasma etching systems available from surface technology systems. Further, the corrugated portion 123 can be formed through the utilisation of a half tone mask process.

[0199] One form of detailed manufacturing process which can be used to fabricate monolithic ink jet print heads operating in accordance with the principles taught by the present embodiment can proceed utilizing the following steps:

1. Using a double sided polished wafer, complete a 0.5 micron, one poly, 2 metal CMOS process. This step is shown in Fig. 26. For clarity, these diagrams may not be to scale, and may not represent a cross section though any single plane of the nozzle. Fig. 25 is a key to representations of various materials in these manufacturing diagrams, and those of other cross referenced ink jet configurations.
2. Etch the passivation layers to expose the bottom electrode, formed of second level metal. This etch is performed using Mask 1. This step is shown in Fig. 27.
3. Deposit 50 nm of PTFE or other highly hydrophobic material.
4. Deposit 0.5 microns of sacrificial material, e.g. polyimide.
5. Deposit 0.5 microns of (sacrificial) photosensitive polyimide.
6. Expose and develop the photosensitive polyimide using Mask 2. This mask is a gray-scale mask which defines the concertina edge of the upper electrode. The result of the etch is a series of triangular ridges at the circumference of the electrode. This concertina edge is used to convert tensile stress into bend strain, and thereby allow the upper electrode to move when a voltage is applied across the electrodes. This step is shown in Fig. 28.
7. Etch the polyimide and passivation layers using Mask 3, which exposes the contacts for the upper electrode which are formed in second level metal.
8. Deposit 0.1 microns of tantalum, forming the upper electrode.
9. Deposit 0.5 microns of silicon nitride (Si_3N_4), which forms the movable membrane of the upper electrode.
10. Etch the nitride and tantalum using Mask 4. This mask defines the upper electrode, as well as the contacts to the upper electrode. This step is shown in Fig. 29.
11. Deposit 12 microns of (sacrificial) photosensitive polyimide.
12. Expose and develop the photosensitive polyimide using Mask 5. A proximity aligner can be used to obtain a large depth of focus, as the line-width for this step is greater than 2 microns, and can be 5 microns or more. This mask defines the nozzle chamber walls. This step is shown in Fig. 30.
13. Deposit 3 microns of PECVD glass. This step is shown in Fig. 31.
14. Etch to a depth of 1 micron using Mask 6. This mask defines the nozzle rim. This step is shown in Fig. 32.
15. Etch down to the sacrificial layer using Mask 7. This mask defines the roof of the nozzle chamber, and the nozzle itself. This step is shown in Fig. 33.
16. Back-etch completely through the silicon wafer (with, for example, an ASE Advanced Silicon Etcher from Surface Technology Systems) using Mask 8. This mask defines the ink inlets which are etched through the wafer. The wafer is also diced by this etch.
17. Back-etch through the CMOS oxide layer through the holes in the wafer. This step is shown in Fig. 34.

18. Etch the sacrificial polyimide. The nozzle chambers are cleared, a gap is formed between the electrodes and the chips are separated by this etch. To avoid stiction, a final rinse using supercooled carbon dioxide can be used. This step is shown in Fig. 35.
19. Mount the print heads in their packaging, which may be a molded plastic former incorporating ink channels which supply the appropriate color ink to the ink inlets at the back of the wafer.
20. Connect the print heads to their interconnect systems. For a low profile connection with minimum disruption of airflow, TAB may be used. Wire bonding may also be used if the printer is to be operated with sufficient clearance to the paper.
21. Hydrophobize the front surface of the print heads.
22. Fill the completed print heads with ink and test them. A filled nozzle is shown in Fig. 36.

Description of IJ04 F

[0200] In an embodiment, a stacked capacitive actuator is provided which has alternative electrode layers sandwiched between a compressible polymer. Hence, on activation of the stacked capacitor the plates are drawn together compressing the polymer thereby storing energy in the compressed polymer. The capacitor is then deactivated or drained with the result that the compressed polymer acts to return the actuator to its original position and thereby causes the ejection of ink from and ink ejection port.

[0201] Turning now to Fig. 37, there is illustrated a single nozzle arrangement 310 as constructed in accordance with an embodiment. The nozzle arrangement 310 includes an ink ejection portal 311 for the ejection of ink on demand. The ink is ejected from a nozzle chamber 312 by means of a stacked capacitor-type device 313. In a first design, the stacked capacitor device 313 consists of capacitive plates sandwiched between a compressible polymer. Upon charging of the capacitive plates, the polymer is compressed thereby resulting in a general "accordion" or "concertinaing" of the actuator 313 so that it's top surface moves away from the ink ejection portal 311. The compression of the polymer sandwich stores energy in the compressed polymer. The capacitors are subsequently rapidly discharged resulting in the energy in the compressed polymer being released upon the polymer's return to quiescent position. The return of the actuator to it's quiescent position results in the ejection of ink from the nozzle chamber 312. The process is illustrated schematically in Fig. 38 to Fig. 41, with Fig. 38 illustrating the nozzle chamber 310 in it's quiescent or idle state, having an ink meniscus 314 around the nozzle ejection portal 311. Subsequently, the electrostatic actuator 313 is activated resulting in ifs contraction as indicated in Fig. 39. The contraction results in the meniscus 314 changing shape as indicated with the resulting surface tension effects resulting in the drawing in of ink around the meniscus and consequently ink 316 flows into nozzle chamber 312.

[0202] After sufficient time, the meniscus 314 returns to its quiescent position with the capacitor 313 being loaded ready for firing (Fig. 40). The capacitor plates 313 are then rapidly discharged resulting, as illustrated in Fig. 41, in the rapid return of the actuator 313 to it's original position. The rapid return imparts a momentum to the ink within the nozzle chamber 312 so as to cause the expansion of the ink meniscus 314 and the subsequent ejection of ink from the nozzle chamber 312.

[0203] Turning now to Fig. 42, there is illustrated a perspective view of a portion of the actuator 313 exploded in part. The actuator 313 consists of a series of interleaved plates 320, 321 between which is sandwiched a compressive material 322, for example styrene-ethylene-butylene-styrene block co-polymer. One group of electrodes, e.g. 320, 323, 325 jut out at one side of the stacked capacitor layout. A second series of electrodes, e.g. 321, 324 jut out a second side of the capacitive actuator. The electrodes are connected at one side to a first conductive material 327 and the other series of electrodes, e.g. 321, 324 are connected to second conductive material 328 (Fig. 37). The two conductive materials 327, 328 are electrically isolated from one another and are in turn interconnected to lower signal and drive layers as will become more readily apparent here and after.

[0204] In alternative designs, the stacked capacitor device 313 consists of other thin film materials in place of the example styrene-ethylene-butylene-styrene block co-polymer. Such materials may include:

1) Piezo electric materials such as PZT
2) Electrostrictive materials such as PLZT
3) Materials, that can be electrically switched between a ferro-electric and an and-ferro-electric phase such as PLZSnT.

[0205] Importantly, the electrode actuator 313 can be rapidly constructed utilizing chemical vapor deposition (CVD) techniques. The various layers, 320, 321, 322 can be layed down on a planer wafer one after another covering the whole surface of the wafer. A stack can be built up rapidly utilizing CVD techniques. The two sets of electrodes are preferably deposited utilizing separate metals. For example, aluminum and tantalum could be utilized as materials for the metal layers. The utilisation of different metal layers allows for selective etching utilizing a mask layer so as to form

the structure as indicated in Fig. 42. For example, the CVD sandwich can be first layed down and then a series of selective etchings utilizing appropriate masks can be utilized to produced the overall stacked capacitor structure. The utilisation of the CVD process substantially enhances the efficiency of production of the stacked capacitor devices.

Construction of the Ink Nozzle Arrangement

[0206] Turning now to Fig. 43 there is shown an exploded perspective view illustrating the construction of a single ink jet nozzle in accordance with an embodiment. The ink jet nozzle arrangement 310 is constructed on a standard silicon wafer 330 on top of which is constructed data drive circuitry which can be constructed in the usual manner such as a two-level metal CMOS layer 331. On top of the CMOS layer 331 is constructed a nitride passivation layer 332 which provides passivation protection for the lower layers during operation an also should an etchant be utilized which would normally dissolve the lower layers. The various layers of the stacked device 313, for example 320, 321, 322, can be layed down utilizing CVD techniques. The stacked device 313 is constructed utilizing the aforementioned production steps including utilizing appropriate masks for selective etchings to produce the overall stacked capacitor structure. Further, interconnection can be provided between the electrodes 327, 328 and the circuitry in the CMOS layer 331. Finally, a nitride layer 333 is provided so as to form the walls of the nozzle chamber, e.g. 334, and posts, e.g. 335, in one open wall 336 of the nozzle chamber. The surface layer 337 of the layer 333 can be deposited onto a sacrificial material. The sacrificial material is subsequently etched so as to form the nozzle chamber 312 (Fig. 37). To this end, the top layer 337 includes etchant holes, e.g. 338, so as to speed up the etching process in addition to the ink ejection portal 311. The diameter of the etchant holes, e.g. 338, is significantly smaller than that of the ink ejection portal 311. If required an additional nitride layer may be provided on top of the layer 320 to protect the stacked device 313 during the etching of the sacrificial material to form the nozzle chamber 312 (Fig. 37) and during operation of the ink jet nozzle.

[0207] One form of detailed manufacturing process which can be used to fabricate monolithic ink jet print heads operating in accordance with the principles taught by the present embodiment can proceed utilizing the following steps:

1. Using a double sided polished wafer, complete a 0.5 micron, one poly, 2 metal CMOS process. This step is shown in Fig. 45. For clarity, these diagrams may not be to scale, and may not represent a cross section though any single plane of the nozzle. Fig. 44 is a key to representations of various materials in these manufacturing diagrams, and those of other cross referenced ink jet configurations.
2. Etch the CMOS oxide layers to second level metal using Mask 1. This mask defines the contact vias from the electrostatic stack to the drive circuitry.
3. Deposit 0.1 microns of aluminum.
4. Deposit 0.1 microns of elastomer.
5. Deposit 0.1 microns of tantalum.
6. Deposit 0.1 microns of elastomer.
7. Repeat steps 2 to 5 twenty times to create a stack of alternating metal and elastomer which is 8 microns high, with 40 metal layers and 40 elastomer layers. This step is shown in Fig. 46.
8. Etch the stack using Mask 2. This leaves a separate rectangular multi-layer stack for each nozzle. This step is shown in Fig. 47.
9. Spin on resist, expose with Mask 3, and develop. This mask defines one side of the stack. This step is shown in Fig. 48.
10. Etch the exposed elastomer layers to a horizontal depth of 1 micron.
11. Wet etch the exposed aluminum layers to a horizontal depth of 3 microns.
12. Foam the exposed elastomer layers by 50 nm to close the 0.1 micron gap left by the etched aluminum.
13. Strip the resist. This step is shown in Fig. 49.
14. Spin on resist, expose with Mask 4, and develop. This mask defines the opposite side of the stack. This step is shown in Fig. 50.
15. Etch the exposed elastomer layers to a horizontal depth of 1 micron.
16. Wet etch the exposed tantalum layers to a horizontal depth of 3 microns.
17. Foam the exposed elastomer layers by 50 nm to close the 0.1 micron gap left by the etched aluminum.
18. Strip the resist. This step is shown in Fig. 51.
19. Deposit 1.5 microns of tantalum. This metal contacts all of the aluminum layers on one side of the stack, and all of the tantalum layers on the other side of the stack.
20. Etch the tantalum using Mask 5. This mask defines the electrodes at both edges of the stack. This step is shown in Fig. 52.
21. Deposit 18 microns of sacrificial material (e.g. photosensitive polyimide).
22. Expose and develop the sacrificial layer using Mask 6 using a proximity aligner. This mask defines the nozzle chamber walls and inlet filter. This step is shown in Fig. 53.

23. Deposit 3 microns of PECVD glass.
24. Etch to a depth of 1 micron using Mask 7. This mask defines the nozzle rim. This step is shown in Fig. 54.
25. Etch down to the sacrificial layer using Mask 8. This mask defines the roof of the nozzle chamber, and the nozzle itself. This step is shown in Fig. 55.
26. Back-etch completely through the silicon wafer (with, for example, an ASE Advanced Silicon Etcher from Surface Technology Systems) using Mask 9. This mask defines the ink inlets which are etched through the wafer. The wafer is also diced by this etch. This step is shown in Fig. 56.
27. Back-etch through the CMOS oxide layer through the holes in the wafer.
28. Etch the sacrificial material. The nozzle chambers are cleared, and the chips are separated by this etch. This step is shown in Fig. 57.
29. Mount the print heads in their packaging, which may be a molded plastic former incorporating ink channels which supply the appropriate color ink to the ink inlets at the back of the wafer.
30. Connect the print heads to their interconnect systems. For a low profile connection with minimum disruption of airflow, TAB may be used. Wire bonding may also be used if the printer is to be operated with sufficient clearance to the paper.
31. Hydrophobize the front surface of the print heads.
32. Fill the completed print heads with ink and test them. A filled nozzle is shown in Fig. 58.

Description of IJ05 F

[0208] An embodiment of the present invention relies upon the utilisation of a magnetic actuator to "load" a spring, such that, upon deactivation of the magnetic actuator the resultant movement of the spring causes ejection of a drop of ink as the spring returns to its original position.

[0209] Turning to Fig. 59, there is illustrated an exploded perspective view of an ink nozzle arrangement 401 constructed in accordance with an embodiment. It would be understood that an embodiment can be constructed as an array of nozzle arrangements 401 so as to together form a line for printing.

[0210] The operation of the ink nozzle arrangement 401 of Fig. 59 proceeds by a solenoid 402 being energized by way of a driving circuit 403 when it is desired to print out a ink drop. The energized solenoid 402 induces a magnetic field in a fixed soft magnetic pole 404 and a moveable soft magnetic pole 405. The solenoid power is turned on to a maximum current for long enough to move the moveable pole 405 from its rest position to a stopped position close to the fixed magnetic pole 404. The ink nozzle arrangement 401 of Fig. 59 sits within an ink chamber filled with ink. Therefore, holes 406 are provided in the moveable soft magnetic pole 405 for "squirting" out of ink from around the coil 402 when the plate 405 undergoes movement.

[0211] The moveable soft magnetic pole is balanced by a fulcrum 408 with a piston head 409. Movement of the magnetic pole 405 closer to the stationary pole 404 causes the piston head 409 to move away from a nozzle chamber 411 drawing air into the chamber 411 via an ink ejection port 413. The piston 409 is then held open above the nozzle chamber 411 by means of maintaining a low "keeper" current through solenoid 402. The keeper level current through solenoid 402 being sufficient to maintain the moveable pole 405 against the fixed soft magnetic pole 404. The level of current will be substantially less than the maximum current level because the gap between the two poles 404 and 405 is at a minimum. For example, a keeper level current of 10% of the maximum current level may be suitable. During this phase of operation, the meniscus of ink at the nozzle tip or ink ejection port 413 is a concave hemisphere due to the in flow of air. The surface tension on the meniscus exerts a net force on the ink which results in ink flow from the ink chamber into the nozzle chamber 411. This results in the nozzle chamber refilling, replacing the volume taken up by the piston head 409 which has been withdrawn. This process takes approximately 100 µs.

[0212] The current within solenoid 402 is then reversed to half that of the maximum current. The reversal demagnetizes the magnetic poles and initiates a return of the piston 409 to its rest position. The piston 409 is moved to its normal rest position by both the magnetic repulsion and by the energy stored in a stressed torsional spring 416,419 which was put in a state of torsion upon the movement of moveable pole 405.

[0213] The forces applied to the piston 409 as a result of the reverse current and spring 416,419 will be greatest at the beginning of the movement of the piston 409 and will decrease as the spring elastic stress falls to zero. As a result, the acceleration of piston 409 is high at the beginning of a reverse stroke and the resultant ink velocity within the chamber 411 becomes uniform during the stroke. This results in an increased operating tolerance before ink flow over the print head surface will occur.

[0214] At a predetermined time during the return stroke, the solenoid reverse current is turned off. The current is turned off when the residual magnetism of the movable pole is at a minimum. The piston 409 continues to move towards its original rest position.

[0215] The piston 409 will overshoot the quiescent or rest position due to its inertia. Overshoot in the piston movement achieves two things: greater ejected drop volume and velocity, and improved drop break off as the piston returns from

overshoot to its quiescent position.

[0216] The piston 409 will eventually return from overshoot to the quiescent position. This return is caused by the springs 416, 419 which are now stressed in the opposite direction. The piston return "sucks" some of the ink back into the nozzle chamber 411, causing the ink ligament connecting the ink drop to the ink in the nozzle chamber 411 to thin. The forward velocity of the drop and the backward velocity of the ink in the nozzle chamber 411 are resolved by the ink drop breaking off from the ink in the nozzle chamber 411.

[0217] The piston 409 stays in the quiescent position until the next drop ejection cycle.

[0218] A liquid ink print head has one ink nozzle arrangement 401 associated with each of the multitude of nozzles. The arrangement 401 has the following major parts:

(1) Drive circuitry 403 for driving the solenoid 402.

(2) A nozzle tip 413. The radius of the nozzle tip 413 is an important determinant of drop velocity and drop size.

(3) A piston 404. This is a cylinder which moves through the nozzle chamber 411 to expel the ink. The piston 409 is connected to one end of the lever arm 417. The piston radius is approximately 1.5 to 2 times the radius of the hole 413. The ink drop volume output is mostly determined by the volume of ink displaced by the piston 409 during the piston return stroke.

(4) A nozzle chamber 411. The nozzle chamber 411 is slightly wider than the piston 409. The gap between the piston 409 and the nozzle chamber walls is as small as is required to ensure that the piston does not contact the nozzle chamber during actuation or return. If the print heads are fabricated using 0.5 μm semiconductor lithography, then a 1 μm gap will usually be sufficient. The nozzle chamber is also deep enough so that air ingested through the nozzle tip 413 when the plunger 409 returns to its quiescent state does not extend to the piston 409. If it does, the ingested bubble may form a cylindrical surface instead of a hemispherical surface. If this happens, the nozzle will not refill properly.

(5) A solenoid 402. This is a spiral coil of copper. Copper is used for its low resistivity, and high electro-migration resistance.

(6) A fixed magnetic pole of ferromagnetic material 404.

(7) A moveable magnetic pole of ferromagnetic material 405. To maximize the magnetic force generated, the moveable magnetic pole 405 and fixed magnetic pole 404 surround the solenoid 402 as a torus. Thus little magnetic flux is lost, and the flux is concentrated across the gap between the moveable magnetic pole 405 and the fixed pole 404. The moveable magnetic pole 405 has holes in the surface 406 (Fig. 59) above the solenoid to allow trapped ink to escape. These holes are arranged and shaped so as to minimize their effect on the magnetic force generated between the moveable magnetic pole 405 and the fixed magnetic pole 404.

(8) A magnetic gap. The gap between the fixed plate 404 and the moveable magnetic pole 405 is one of the most important "parts" of the print actuator. The size of the gap strongly affects the magnetic force generated, and also limits the travel of the moveable magnetic pole 405. A small gap is desirable to achieve a strong magnetic force. The travel of the piston 409 is related to the travel of the moveable magnetic pole 405 (and therefore the gap) by the lever arm 417.

(9) Length of the lever arm 417. The lever arm 417 allows the travel of the piston 409 and the moveable magnetic pole 405 to be independently optimized. At the short end of the lever arm 417 is the moveable magnetic pole 405. At the long end of the lever arm 417 is the piston 409. The spring 416 is at the fulcrum 408. The optimum travel for the moveable magnetic pole 405 is less than 1 micron, so as to minimize the magnetic gap. The optimum travel for the piston 409 is approximately 405 μm for a 1200 dpi printer. The difference in optimum travel is resolved by a lever 417 with a 5:1 or greater ratio in arm length.

(10) Springs 416, 419 (Fig. 59). The springs e.g. 416 return the piston to its quiescent position after a deactivation of the actuator. The springs 416 are at the fulcrum 408 of the lever arm.

(11) Passivation layers (not shown). Al surfaces are preferably coated with passivation layers, which may be silicon nitride (Si_3N_4), diamond like carbon (DLC), or other chemically inert, highly impermeable layer. The passivation layers are especially important for device lifetime, as the active device is immersed in the ink. As will be evident from the foregoing description there is an advantage in ejecting the drop on deactivation of the solenoid 402. This advantage comes from the rate of acceleration of the moving magnetic pole 405 which is used as a piston or plunger.

[0219] The force produced by a moveable magnetic pole by an electromagnetic induced field is approximately proportional to the inverse square of the gap between the moveable 405 and static magnetic poles 404. When the solenoid 402 is off, this gap is at a maximum. When the solenoid 402 is turned on, the moving pole 405 is attracted to the static pole 404. As the gap decreases, the force increases, accelerating the movable pole 405 faster. The velocity increases in a highly non-linear fashion, approximately with the square of time. During the reverse movement of the moving pole 405 upon deactivation the acceleration of the moving pole 405 is greatest at the beginning and then slows as the spring elastic stress falls to zero. As a result, the velocity of the moving pole 405 is more uniform during the reverse stroke

movement.

(1) The velocity of piston or plunger 409 is much more constant over the duration of the drop ejection stroke.
(2) The piston or plunger 409 can readily be entirely removed from the ink chamber during the ink fill stage, and thereby the nozzle filling time can be reduced, allowing faster print head operation.

[0220] However, this approach does have some disadvantages over a direct firing type of actuator:

(1) The stresses on the spring 416 are relatively large. Careful design is required to ensure that the springs operate at below the yield strength of the materials used.
(2) The solenoid 402 must be provided with a "keeper" current for the nozzle fill duration. The keeper current will typically be less than 10% of the solenoid actuation current. However, the nozzle fill duration is typically around 50 times the drop firing duration, so the keeper energy will typically exceed the solenoid actuation energy.
(3) The operation of the actuator is more complex due to the requirement for a "keeper" phase.

[0221] The print head is fabricated from two silicon wafers. A first wafer is used to fabricate the print nozzles (the print head wafer) and a second wafer (the Ink Channel Wafer) is utilized to fabricate the various ink channels in addition to providing a support means for the first channel. The fabrication process then proceeds as follows:

(1) Start with a single crystal silicon wafer 420, which has a buried epitaxial layer 422 of silicon which is heavily doped with boron. The boron should be doped to preferably 10^{20} atoms per cm^3 of boron or more, and be approximately 3 μm thick, and be doped in a manner suitable for the active semiconductor device technology chosen. The wafer diameter of the print head wafer should be the same as the ink channel wafer.
(2) Fabricate the drive transistors and data distribution circuitry 403 according to the process chosen (e.g. CMOS).
(3) Planarise the wafer 420 using chemical Mechanical Planarisation (CMP).
(4) Deposit 5 micron of glass (SiO_2) over the second level metal.
(5) Using a dual damascene process, etch two levels into the top oxide layer. Level 1 is 4 μm deep, and level 2 is 5 μm deep. Level 2 contacts the second level metal. The masks for the static magnetic pole are used.
(6) Deposit 5 μm of nickel iron alloy (NiFe).
(7) Planarise the wafer using CMP, until the level of the SiO_2 is reached forming the magnetic pole 404.
(8) Deposit 0.1 μm of silicon nitride (Si_3N_4).
(9) Etch the Si_3N_4 for via holes for the connections to the solenoids, and for the nozzle chamber region 411.
(10) Deposit 4 μm of SiO_2.
(11) Plasma etch the SiO_2 in using the solenoid and support post mask.
(12) Deposit a thin diffusion barrier, such as Ti, TiN, or TiW, and an adhesion layer if the diffusion layer chosen has insufficient adhesion.
(13) Deposit 4 μm of copper for forming the solenoid 402 and spring posts 424. The deposition may be by sputtering, CVD, or electroless plating. As well as lower resistivity than aluminum, copper has significantly higher resistance to electro-migration. The electro-migration resistance is significant, as current densities in the order of 3×10^6 Amps/cm^2 may be required. Copper films deposited by low energy kinetic ion bias sputtering have been found to have 1,000 to 100,000 times larger electro-migration lifetimes larger than aluminum silicon alloy. The deposited copper should be alloyed and layered for maximum electro-migration lifetimes than aluminum silicon alloy. The deposited copper should be alloyed and layered for maximum electro-migration resistance, while maintaining high electrical conductivity.
(14) Planarise the wafer using CMP, until the level of the SiO_2 is reached. A damascene process is used for the copper layer due to the difficulty involved in etching copper. However, since the damascene dielectric layer is subsequently removed, processing is actually simpler if a standard deposit/etch cycle is used instead of damascene. However, it should be noted that the aspect ratio of the copper etch would be 8:1 for this design, compared to only 4:1 for a damascene oxide etch. This difference occurs because the copper is 1 μm wide and 4 μm thick, but has only 0.5 μm spacing. Damascene processing also reduces the lithographic difficulty, as the resist is on oxide, not metal.
(15) Plasma etch the nozzle chamber 411, stopping at the boron doped epitaxial silicon layer 421. This etch will be through around 13 μm of SiO_2, and 8 μm of silicon. The etch should be highly anisotropic, with near vertical sidewalls. The etch stop detection can be on boron in the exhaust gasses. If this etch is selective against NiFe, the masks for this step and the following step can be combined, and the following step can be eliminated. This step also etches the edge of the print head wafer down to the boron layer, for later separation.
(16) Etch the SiO_2 layer. This need only be removed in the regions above the NiFe fixed magnetic poles, so it can be removed in the previous step if an Si and SiO_2 etch selective against NiFe is used.

(17) Conformably deposit 0.5 μm of high density Si_3N_4. This forms a corrosion barrier, so should be free of pin-holes, and be impermeable to OH ions.
(18) Deposit a thick sacrificial layer 440. This layer should entirely fill the nozzle chambers, and coat the entire wafer to an added thickness of 8 μm. The sacrificial layer may be SiO_2.
(19) Etch two depths in the sacrificial layer for a dual damascene process. The deep etch is 8 μm, and the shallow etch is 3 μm. The masks defines the piston 409, the lever arm 417, the springs 416 and the moveable magnetic pole 405.
(20) Conformably deposit 0.1 μm of high density Si_3N_4. This forms a corrosion barrier, so should be free of pin-holes, and be impermeable to OH ions.
(21) Deposit 8 μm of nickel iron alloy (NiFe).
(22) Planarise the wafer using CMP, until the level of the SiO_2 is reached.
(23) Deposit 0.1 μm of silicon nitride (Si_3N_4).
(24) Etch the Si_3N_4 everywhere except the top of the plungers.
(25) Open the bond pads.
(26) Permanently bond the wafer onto a pre-fabricated ink channel wafer. The active side of the print head wafer faces the ink channel wafer. The ink channel wafer is attached to a backing plate, as it has already been etched into separate ink channel chips.
(27) Etch the print head wafer to entirely remove the backside silicon to the level of the boron doped epitaxial layer 422. This etch can be a batch wet etch in ethylenediamine pyrocatechol (EDP).
(28) Mask the nozzle rim 414 from the underside of the print head wafer. This mask also includes the chip edges.
(31) Etch through the boron doped silicon layer 422, thereby creating the nozzle holes. This etch should also etch fairly deeply into the sacrificial material in the nozzle chambers to reduce time required to remove the sacrificial layer.
(32) Completely etch the sacrificial material. If this material is SiO_2 then a HF etch can be used. The nitride coating on the various layers protects the other glass dielectric layers and other materials in the device from HF etching. Access of the HF to the sacrificial layer material is through the nozzle, and simultaneously through the ink channel chip. The effective depth of the etch is 21 μm.
(33) Separate the chips from the backing plate. Each chip is now a full print head including ink channels. The two wafers have already been etched through, so the print heads do not need to be diced.
(34) Test the print heads and TAB bond the good print heads.
(35) Hydrophobise the front surface of the print heads.
(36) Perform final testing on the TAB bonded print heads.

[0222] Fig. 60 shows a perspective view, in part in section, of a single ink jet nozzle arrangement 401 constructed in accordance with an embodiment.

[0223] One alternative form of detailed manufacturing process which can be used to fabricate monolithic ink jet print heads operating in accordance with the principles taught by the present embodiment can proceed utilizing the following steps:

1. Using a double sided polished wafer deposit 3 microns of epitaxial silicon heavily doped with boron.
2. Deposit 10 microns of epitaxial silicon, either p-type or n-type, depending upon the CMOS process used.
3. Complete a 0.5 micron, one poly, 2 metal CMOS process. This step is shown in Fig. 62. For clarity, these diagrams may not be to scale, and may not represent a cross section though any single plane of the nozzle. Fig. 61 is a key to representations of various materials in these manufacturing diagrams.
4. Etch the CMOS oxide layers down to silicon or aluminum using Mask 1. This mask defines the nozzle chamber, the edges of the print heads chips, and the vias for the contacts from the aluminum electrodes to the two halves of the split fixed magnetic plate.
5. Plasma etch the silicon down to the boron doped buried layer, using oxide from step 4 as a mask. This etch does not substantially etch the aluminum. This step is shown in Fig. 63.
6. Deposit a seed layer of cobalt nickel iron alloy. CoNiFe is chosen due to a high saturation flux density of 2 Tesla, and a low coercivity. [Osaka, Tetsuya et al, A soft magnetic CoNiFe film with high saturation magnetic flux density, Nature 392, 796-798 (1998)].
7. Spin on 4 microns of resist, expose with Mask 2, and develop. This mask defines the split fixed magnetic plate and the nozzle chamber wall, for which the resist acts as an electroplating mold. This step is shown in Fig. 64.
8. Electroplate 3 microns of CoNiFe. This step is shown in Fig. 65.
9. Strip the resist and etch the exposed seed layer. This step is shown in Fig. 66.
10. Deposit 0.1 microns of silicon nitride (Si_3N_4).
11. Etch the nitride layer using Mask 3. This mask defines the contact vias from each end of the solenoid coil to

the two halves of the split fixed magnetic plate.

12. Deposit a seed layer of copper. Copper is used for its low resistivity (which results in higher efficiency) and its high electromigration resistance, which increases reliability at high current densities.

13. Spin on 5 microns of resist, expose with Mask 4, and develop. This mask defines the solenoid spiral coil, the nozzle chamber wall and the spring posts, for which the resist acts as an electroplating mold. This step is shown in Fig. 67.

14. Electroplate 4 microns of copper.

15. Strip the resist and etch the exposed copper seed layer. This step is shown in Fig. 68.

16. Wafer probe. All electrical connections are complete at this point, bond pads are accessible, and the chips are not yet separated.

17. Deposit 0.1 microns of silicon nitride.

18. Deposit 1 micron of sacrificial material. This layer determines the magnetic gap.

19. Etch the sacrificial material using Mask 5. This mask defines the spring posts and the nozzle chamber wall. This step is shown in Fig. 69.

20. Deposit a seed layer ofCoNiFe.

21. Spin on 4.5 microns of resist, expose with Mask 6, and develop. This mask defines the walls of the magnetic plunger, the lever arm, the nozzle chamber wall and the spring posts. The resist forms an electroplating mold for these parts. This step is shown in Fig. 70.

22. Electroplate 4 microns of CoNiFe. This step is shown in Fig. 71.

23. Deposit a seed layer of CoNiFe.

24. Spin on 4 microns of resist, expose with Mask 7, and develop. This mask defines the roof of the magnetic plunger, the nozzle chamber wall, the lever arm, the springs, and the spring posts. The resist forms an electroplating mold for these parts. This step is shown in Fig. 72.

25. Electroplate 3 microns of CoNiFe. This step is shown in Fig. 73.

26. Mount the wafer on a glass blank and back-etch the wafer using KOH, with no mask. This etch thins the wafer and stops at the buried boron doped silicon layer. This step is shown in Fig. 74.

27. Plasma back-etch the boron doped silicon layer to a depth of 1 micron using Mask 8. This mask defines the nozzle rim. This step is shown in Fig. 75.

28. Plasma back-etch through the boron doped layer using Mask 9. This mask defines the nozzle, and the edge of the chips. At this stage, the chips are separate, but are still mounted on the glass blank. This step is shown in Fig. 76.

29. Detach the chips from the glass blank. Strip all adhesive, resist, sacrificial, and exposed seed layers. This step is shown in Fig. 77.

30. Mount the print heads in their packaging, which may be a molded plastic former incorporating ink channels which supply different colors of ink to the appropriate regions of the front surface of the wafer.

31. Connect the print heads to their interconnect systems.

32. Hydrophobize the front surface of the print heads.

33. Fill the completed print heads with ink and test them. A filled nozzle is shown in Fig. 78.

Description of IJ06 F

[0224] Referring now to Fig. 79, there is illustrated a cross-sectional view of a single ink nozzle unit 510 constructed in accordance with an embodiment. The ink nozzle unit 510 includes an ink ejection nozzle 511 for the ejection of ink which resides in a nozzle chamber 513. The ink is ejected from the nozzle chamber 513 by means of movement of paddle 515. The paddle 515 operates in a magnetic field 516 which runs along the plane of the paddle 515. The paddle 515 includes at least one solenoid coil 517 which operates under the control of nozzle activation signal. The paddle 515 operates in accordance with the well known principal of the force experienced by a moving electric charge in a magnetic field. Hence, when it is desired to activate the paddle 515 to eject an ink drop out of ink ejection nozzle 511, the solenoid coil 517 is activated. As a result of the activation, one end of the paddle will experience a downward force 519 while the other end of the paddle will experience an upward force 520. The downward force 519 results in a corresponding movement of the paddle and the resultant ejection of ink.

[0225] As can be seen from the cross section of Fig. 79, the paddle 515 can comprise multiple layers of solenoid wires with the solenoid wires, e.g. 521, forming a complete circuit having the current flow in a counter clockwise direction around a center of the paddle 515. This results in paddle 515 experiences a rotation about an axis through (as illustrated in Fig. 80) the center point the rotation being assisted by means of a torsional spring, e.g. 522, which acts to return the paddle 515 to its quiescent state after deactivation of the current paddle 515. Whilst a torsional spring 522 is to be preferred it is envisaged that other forms of springs may be possible such as a leaf spring or the like.

[0226] The nozzle chamber 513 refills due to the surface tension of the ink at the ejection nozzle 511 after the ejection

of ink.

Manufacturing Construction Process

[0227] The construction to the inkjet nozzles can proceed by way of utilisation of microelectronic fabrication techniques commonly known to those skilled in the field of semi-conductor fabrication. For a general introduction to a micro-electro mechanical system (MEMS) reference is made to standard proceedings in this field including the proceedings of the SPIE (International Society for Optical Engineering), volumes 2642 and 2882 which contain the proceedings for recent advances and conferences in this field.

[0228] In accordance with one form of construction, two wafers are utilized. Upon which the active circuitry and inkjet print nozzles are fabricated and a further wafer in which the ink channels are fabricated.

[0229] Turning now to Fig. 81, there is illustrated an exploded perspective view of a single ink jet nozzle constructed in accordance with an embodiment. Construction begins which a silicon wafer 540 upon which has been fabricated and epitaxial boron doped layer 541 and an epitaxial silicon layer 542. The boron layer is doped to a concentration of preferably $10^{20}/cm^3$ of boron or more and is approximately 2 microns thick. The silicon epitaxial layer is constructed to be approximately 8 microns thick and is doped in a manner suitable for the active semi conductor device technology.

[0230] Next, the drive transistors and distribution circuitry are constructed in accordance with the fabrication process chosen resulting in a CMOS logic and drive transistor level 543. A silicon nitride layer 544 is then deposited.

[0231] The paddle metal layers are constructed utilizing a damascene process which is a well known process utilizing chemical mechanical polishing techniques (CMP) well known for utilization as a multi-level metal application. The solenoid coils in paddle 515 (Fig. 79) can be constructed from a double layer which for a first layer 545, is produced utilizing a single damascene process.

[0232] Next, a second layer 546 is deposited utilizing this time a dual damascene process. The copper layers 545, 546 include contact posts 547, 548, for interconnection of the electromagnetic coil to the CMOS 543 through vias in the silicon nitride layer 544 (not shown). However, the metal post portion also includes a via interconnecting it with the lower copper level. The damascene process is finished with a planarised glass layer. The glass layers produced during utilisation of the damascene processes utilized for the deposition of layers 545, 546, are shown as one layer 575 in Fig. 81.

[0233] Subsequently, the paddle is formed and separated from the adjacent glass layer by means of a plasma edge as the edge being down to the position of stop player 580. Further, the nozzle chamber 513 underneath the panel is removed by means of a silicon anisotropic wet edge which will edge down to the boron layer 541. A passivation layer is then applied. The passivation layer can comprise a conformable diamond like carbon layer or a high density Si_3N_4 coating, this coating provides a protective layer for the paddle and its surrounds as the paddle must exist in the highly corrosive environment water and ink.

[0234] Next, the silicon wafer can be back-edged through the boron doped layer and the ejection port 511 and an ejection port rim 550 (Fig. 79) can also be formed utilizing etching procedures.

[0235] One form of alternative detailed manufacturing process which can be used to fabricate monolithic ink jet print heads operating in accordance with the principles taught by the present embodiment can proceed utilizing the following steps:

1. Using a double sided polished wafer deposit 3 microns of epitaxial silicon heavily doped with boron.
2. Deposit 10 microns of epitaxial silicon, either p-type or n-type, depending upon the CMOS process used.
3. Complete a 0.5 micron, one poly, 2 metal CMOS process. This step is shown in Fig. 83. For clarity, these diagrams may not be to scale, and may not represent a cross section though any single plane of the nozzle. Fig. 82 is a key to representations of various materials in these manufacturing diagrams, and those of other cross referenced ink jet configurations.
4. Deposit 0.1 microns of silicon nitride (Si_3N_4).
5. Etch the nitride layer using Mask 1. This mask defines the contact vias from the solenoid coil to the second-level metal contacts.
6. Deposit a seed layer of copper. Copper is used for its low resistivity (which results in higher efficiency) and its high electromigration resistance, which increases reliability at high current densities.
7. Spin on 3 microns of resist, expose with Mask 2, and develop. This mask defines the first level coil of the solenoid. The resist acts as an electroplating mold. This step is shown in Fig. 84.
8. Electroplate 2 microns of copper.
9. Strip the resist and etch the exposed copper seed layer. This step is shown in Fig. 85.
10. Deposit 0.1 microns of silicon nitride (Si_3N_4).
11. Etch the nitride layer using Mask 3. This mask defines the contact vias between the first level and the second level of the solenoid.

12. Deposit a seed layer of copper.
13. Spin on 3 microns of resist, expose with Mask 4, and develop. This mask defines the second level coil of the solenoid. The resist acts as an electroplating mold. This step is shown in Fig. 86.
14. Electroplate 2 microns of copper.
15. Strip the resist and etch the exposed copper seed layer. This step is shown in Fig. 87.
16. Wafer probe. All electrical connections are complete at this point, bond pads are accessible, and the chips are not yet separated.
17. Deposit 0.1 microns of silicon nitride.
18. Etch the nitride and CMOS oxide layers down to silicon using Mask 5. This mask defines the nozzle chamber mask and the edges of the print heads chips for crystallographic wet etching. This step is shown in Fig. 88.
19. Crystallographically etch the exposed silicon using KOH. This etch stops on <111> crystallographic planes, and on the boron doped silicon buried layer. Due to the design of Mask 5, this etch undercuts the silicon, providing clearance for the paddle to rotate downwards.
20. Mount the wafer on a glass blank and back-etch the wafer using KOH, with no mask. This etch thins the wafer and stops at the buried boron doped silicon layer. This step is shown in Fig. 89.
21. Plasma back-etch the boron doped silicon layer to a depth of 1 micron using Mask 6. This mask defines the nozzle rim. This step is shown in Fig. 90.
22. Plasma back-etch through the boron doped layer using Mask 7. This mask defines the nozzle, and the edge of the chips. At this stage, the chips are separate, but are still mounted on the glass blank. This step is shown in Fig. 91.
23. Strip the adhesive layer to detach the chips from the glass blank. This step is shown in Fig. 92.
24. Mount the print heads in their packaging, which may be a molded plastic former incorporating ink channels which supply different colors of ink to the appropriate regions of the front surface of the wafer.
25. Connect the print heads to their interconnect systems.
26. Hydrophobize the front surface of the print heads.
27. Fill with ink, apply a strong magnetic field in the plane of the chip surface, and test the completed print heads. A filled nozzle is shown in Fig. 93.

Description of IJ07 F

[0236] Turning to Fig. 94, there is illustrated 601 a perspective view in section of a single nozzle constructed in accordance with the techniques of an embodiment.

[0237] Each nozzle 601 includes a nozzle outlet port 602 for the ejection of ink from a nozzle chamber 604 as a result of activation of an electromagnetic piston 605. The electromagnetic piston 605 is activated via solenoid coil 606 which circles the piston 605. Upon a current passing through the solenoid coil 606, the piston 605 experiences a force in the direction as indicated 613 hence. As a result the piston 605 begins movement towards outlet port 602 and thereby imparts momentum to ink within the nozzle chamber 604. Torsional springs, e.g. 608, act against the movement of piston 605, however they do not fully stop the movement of the piston.

[0238] Upon the completion of the ejection cycle, the current to the coil 606 is turned off. As a result, the torsional springs, e.g. 608, act to return the piston 605 to its rest position as initially shown in Fig. 94. Subsequently, surface tension forces cause the chamber 604 to refill with ink and to return ready for "re-firing".

[0239] Current to the coil 606 is provided via aluminum connectors (not shown) which interconnect the coil 606 with a semi-conductor drive transistor and logic layer 618.

Construction

[0240] A liquid ink jet print head 601 has one actuator device associated with each of a multitude of nozzles. It will be evident that the actuator 601 has the following major parts, which are constructed using standard semi-conductor and micromechanical construction techniques:

1. Drive circuitry 618.
2. The nozzle outlet port 602. The radius of the nozzle outlet port 602 is an important determinant of drop velocity and drop size.
3. The magnetic piston 605. This can be a cylinder of a rare earth magnetic material such as neodymium iron boron (NdFeB) or samarium cobalt (SaCo). The pistons 605 are magnetized after a last high temperature step in the fabrication of the print heads, to thereby ensure that the Curie temperature is not exceeded after magnetization. A typical print head may include many thousands of pistons all of which can be magnetized simultaneously and in the same direction.

4. The nozzle chamber 604. The nozzle chamber 604 is slightly wider than the piston 605. The gap between the piston 605 and the nozzle chamber 604 can be as small as is required to ensure that the piston does not contact the nozzle chamber during actuation or return. If the print heads are fabricated using a standard 0.5 micron lithography process, then a I micron gap will usually be sufficient. The nozzle chamber 604 should also be deep enough to that air ingested through the nozzle tip 602 when the plunger returns to its quiescent state does not extend to the piston. If it does, the ingested air bubble may form a cylindrical surface instead of a hemispherical surface. If this happens, the nozzle chamber 604 may not refill properly.
5. The solenoid coil 606. This is a spiral coil of copper. A double layer spiral is used to obtain a high field strength with a small device radius. Copper is used for its low resistivity, and high electro-migration resistance.
6. Springs 608-611. The springs 608-611 return the piston 605 to its quiescent position after a drop 603 has been ejected. The springs can be fabricated from silicon nitride.
7. Passivation layers. All surfaces are coated with passivation layers, which may be silicon nitride (Si_3N_4), diamond like carbon (DLC), or other chemically inert, highly impermeable layer. The passivation layers are especially important for device lifetime, as the active device is immersed in the ink.

Example method of Fabrication

[0241] The print head is fabricated from two silicon wafers. A first wafer is used to fabricate the print nozzles (the print head wafer) and a second wafer is utilized to fabricate the various ink channels in addition to providing a support means for the first channel (the Ink Channel Wafer). Fig. 95 is an exploded perspective view illustrating the construction of a single ink jet nozzle 601 on a print head wafer. The fabrication process proceeds as follows:
[0242] Start with a single silicon wafer, which has a buried epitaxial layer 621 of silicon which is heavily doped with boron. The boron should be doped to preferably 10^{20} atoms per cm^3 of boron or more, and be approximately 3 micron thick. A lightly doped silicon epitaxial layer 622 on top of the boron doped layer 621 should be approximately 8 micron thick, and be doped in a manner suitable for the active semiconductor device technology chosen. This is the starting point for the print head wafer. The wafer diameter should be the same as that of the ink channel wafer.
[0243] Next, fabricate the drive transistors and data distribution circuitry required for each nozzle according to the process chosen, in a standard CMOS layer 618 up until oxide over the first level metal. On top of the CMOS layer 618 is deposited a silicon nitride passivation layer 625. Next, a silicon oxide layer 627 is deposited. The silicon oxide layer 627 is etched utilizing a mask for the copper coil layer. Subsequently, the copper layer 630 is deposited through the mask for the copper coil. The layers 627, 625 also include vias for the interconnection of the copper coil layer 630 to the underlying CMOS 618 (not shown). Next, the nozzle chamber 604 (Fig. 94) is etched. Subsequently, a sacrificial material is deposited to entirely fill the etched volume (not shown). On top of the sacrificial material a silicon nitride layer 631 is deposited, including site portions 632. Next, the magnetic material layer 633 is deposited utilizing the magnetic piston mask. This layer also includes the posts, e.g. 634.
[0244] A final silicon nitride layer 635 is then deposited onto an additional sacrificial layer (not shown) deposited to cover the bare portions of nitride layer 631 to the height of the magnetic material layer 633, utilizing a mask for the magnetic piston and the torsional springs, e.g. 608. The torsional springs, e.g. 608, and the magnetic piston 605 (see Fig. 94) are liberated by etching the aforementioned sacrificial material.
[0245] For a general introduction to a micro-electro mechanical system (MEMS) reference is made to standard proceedings in this field including the proceedings of the SPIE (International Society for Optical Engineering), volumes 2642 and 2882 which contain the proceedings for recent advances and conferences in this field.
[0246] One form of detailed manufacturing process which can be used to fabricate monolithic ink jet print heads operating in accordance with the principles taught by the present embodiment can proceed utilizing the following steps:

1. Using a double sided polished wafer deposit 3 microns of epitaxial silicon heavily doped with boron.
2. Deposit 10 microns of epitaxial silicon, either p-type or n-type, depending upon the CMOS process used.
3. Complete a 0.5 micron, one poly, 2 metal CMOS process. The metal layers are copper instead of aluminum, due to high current densities and subsequent high temperature processing. This step is shown in Fig. 97. For clarity, these diagrams may not be to scale, and may not represent a cross section though any single plane of the nozzle. Fig. 96 is a key to representations of various materials in these manufacturing diagrams, and those of other cross referenced ink jet configurations.
4. Deposit 0.5 microns of low stress PECVD silicon nitride (Si_3N_4). The nitride acts as a dielectric, and etch stop, a copper diffusion barrier, and an ion diffusion barrier. As the speed of operation of the print head is low, the high dielectric constant of silicon nitride is not important, so the nitride layer can be thick compared to sub-micron CMOS back-end processes.
5. Etch the nitride layer using Mask 1. This mask defines the contact vias from the solenoid coil to the second-level metal contacts, as well as the nozzle chamber. This step is shown in Fig. 98.

6. Deposit 4 microns of PECVD glass.
7. Etch the glass down to nitride or second level metal using Mask 2. This mask defines the solenoid. This step is shown in Fig. 99.
8. Deposit a thin barrier layer of Ta or TaN.
9. Deposit a seed layer of copper. Copper is used for its low resistivity (which results in higher efficiency) and its high electromigration resistance, which increases reliability at high current densities.
10. Electroplate 4 microns of copper.
11. Planarize using CMP. Steps 4 to 11 represent a copper dual damascene process, with a 4:1 copper aspect ratio (4 microns high, 1 micron wide). This step is shown in Fig. 100.
12. Etch down to silicon using Mask 3. This mask defines the nozzle cavity. This step is shown in Fig. 101.
13. Crystallographically etch the exposed silicon using KOH. This etch stops on <111> crystallographic planes, and on the boron doped silicon buried layer. This step is shown in Fig. 102.
14. Deposit 0.5 microns of low stress PECVD silicon nitride.
15. Open the bond pads using Mask 4.
16. Wafer probe. All electrical connections are complete at this point, bond pads are accessible, and the chips are not yet separated.
17. Deposit a thick sacrificial layer (e.g. low stress glass), filling the nozzle cavity. Planarize the sacrificial layer to a depth of 5 microns over the nitride surface. This step is shown in Fig. 103.
18. Etch the sacrificial layer to a depth of 6 microns using Mask 5. This mask defines the permanent magnet plus the magnet support posts. This step is shown in Fig. 104.
19. Deposit 6 microns of permanent magnet material such as neodymium iron boron (NdFeB). Planarize. This step is shown in Fig. 105.
20. Deposit 0.5 microns of low stress PECVD silicon nitride.
21. Etch the nitride using Mask 6, which defines the spring. This step is shown in Fig. 106.
22. Anneal the permanent magnet material at a temperature which is dependant upon the material.
23. Place the wafer is a uniform magnetic field of 2 Tesla (20,000 Gauss) with the field normal to the chip surface. This magnetizes the permanent magnet.
24. Mount the wafer on a glass blank and back-etch the wafer using KOH, with no mask. This etch thins the wafer and stops at the buried boron doped silicon layer. This step is shown in Fig. 107.
25. Plasma back-etch the boron doped silicon layer to a depth of 1 micron using Mask 7. This mask defines the nozzle rim. This step is shown in Fig. 108.
26. Plasma back-etch through the boron doped layer using Mask 8. This mask defines the nozzle, and the edge of the chips.
27. Plasma back-etch nitride up to the glass sacrificial layer through the holes in the boron doped silicon layer. At this stage, the chips are separate, but are still mounted on the glass blank. This step is shown in Fig. 109.
28. Strip the adhesive layer to detach the chips from the glass blank.
29. Etch the sacrificial glass layer in buffered HF. This step is shown in Fig. 110.
30. Mount the print heads in their packaging, which may be a molded plastic former incorporating ink channels which supply different colors of ink to the appropriate regions of the front surface of the wafer.
31. Connect the print heads to their interconnect systems.
32. Hydrophobize the front surface of the print heads.
33. Fill the completed print heads with ink and test them. A filled nozzle is shown in Fig. 111.

Description of IJ08 SF

[0247] In an embodiment, a shutter is actuated by means of a magnetic coil, the coil being utilized to move an attached shutter to thereby cause the shutter to open or close. The shutter is disposed between an ink reservoir having an oscillating ink pressure and a nozzle chamber having an ink ejection port defined therein for the ejection of ink. When the shutter is open, ink is allowed to flow from the ink reservoir through to the nozzle chamber and thereby cause an ejection of ink from the ink ejection port. When the shutter is closed, the nozzle chamber remains in a stable state such that no ink is ejected from the chamber.

[0248] Turning now to Fig. 112, there is illustrated a single ink jet nozzle arrangement 710 in a closed position. The arrangement 710 includes a series of shutters 711 which are located above corresponding apertures to a nozzle chamber. In Fig. 113, the ink jet nozzle 710 is illustrated in an open position which also illustrates the apertures 712 providing a fluid interconnection to a nozzle chamber 713 and an ink ejection port 714. The shutters e.g. 711 are interconnected together and further connected to an arm 716 which is pivotally mounted about a pivot point 717 about which the shutters e.g. 711 rotate. The shutter 711 and arm 716 are constructed from nickel iron (NiFe) so as to be magnetically attracted to an electromagnetic device 719. The electromagnetic device 719 comprises a NiFe core 720 around which

is constructed a copper coil 721. The copper coil 721 is connected to a lower drive layer via vias 723,724. The coil 719 is activated by sending a current through the coil 721 which results in its magnification and corresponding attraction in the areas 726,727. The high levels of attraction are due to its close proximity to the ends of the electromagnet 719. This results in a general rotation of the surfaces 726,727 around the pivot point 717 which in turn results in a corresponding rotation of the shutter from a closed to an open position.

[0249] A number of coiled springs 730-732 are also provided. The coiled springs store energy as a consequence of the rotation of the shutter 711. Hence, upon deactivation of the electromagnet 719 the coil springs 730-732 act to return the shutter to its closed position. As mentioned previously, the opening and closing of the shutter 711 allows for the flow of ink to the ink nozzle chamber for a subsequent ejection. The coil 719 is activated rotating the arm 716 bringing the surfaces 726,727 into close contact with the electromagnet 719. The surfaces 726,727 are kept in contact with the electromagnet 719 by means of utilisation of a keeper current which, due the close proximity between the surfaces is substantially less than that required to initially move the arm 716.

[0250] The shutter 711 is maintained in the plane by means of a guide 734 which overlaps slightly with an end portion of the shutter 711.

[0251] Turning now to Fig. 114, there is illustrated an exploded perspective of one form of construction of a nozzle arrangement 710 in accordance with an embodiment. The bottom level consists of a boron doped silicon layer 740 which can be formed from constructing a buried epitaxial layer within a selected wafer and then back etching utilising the boron doped layer as an etch stop. Subsequently, there is provided a silicon layer 741 which includes a crystallographically etched pit forming the nozzle chamber 713. On top of the silicon layer 741 there is constructed a 2 micron silicon dioxide layer 742 which includes the nozzle chamber pit opening whose side walls are passivated by a subsequent nitride layer. On top of the silicon dioxide layer 742 is constructed a nitride layer 744 which provides passivation of the lower silicon dioxide layer and also provides a base on which to construct the electromagnetic portions and the shutter. The nitride layer 744 and lower silicon dioxide layer having suitable vias for the interconnection to the ends of the electromagnetic circuit for the purposes of supplying power on demand to the electromagnetic circuit.

[0252] Next, a copper layer 745 is provided. The copper layer providing a base wiring layer for the electromagnetic array in addition to a lower portion of the pivot 717 and a lower portion of the copper layer being utilised to form a part of the construction of the guide 734.

[0253] Next, a NiFe layer 747 is provided which is utilized for the formation of the internal portions 720 of the electromagnet, in addition to the pivot, aperture arm and shutter 711 in addition to a portion of the guide 734, in addition to the various spiral springs. On top of the NiFe layer 747 is provided a copper layer 749 for providing the top and side windings of the coil 721 in addition to providing the formation of the top portion of guide 734. Each of the layers 745,747 can be conductively insulated from its surroundings where required through the utilisation of a nitride passivation layer (not shown). Further, a top passivation layer can be provided to cover the various top layers which will be exposed to the ink within the ink reservoir and nozzle chamber. The various levels 745,749 can be formed through the utilisation of supporting sacrificial structures which are subsequently sacrificially etched away to leave the operable device.

[0254] One form of detailed manufacturing process which can be used to fabricate monolithic ink jet print heads operating in accordance with the principles taught by the present embodiment can proceed utilizing the following steps:

1. Using a double sided polished wafer deposit 3 microns of epitaxial silicon heavily doped with boron.
2. Deposit 10 microns of epitaxial silicon, either p-type or n-type, depending upon the CMOS process used.
3. Complete a 0.5 micron, one poly, 2 metal CMOS process. This step is shown in Fig. 116. For clarity, these diagrams may not be to scale, and may not represent a cross section though any single plane of the nozzle. Fig. 115 is a key to representations of various materials in these manufacturing diagrams, and those of other cross referenced ink jet configurations.
4. Etch the CMOS oxide layers down to silicon or aluminum using Mask 1. This mask defines the nozzle chamber, and the edges of the print heads chips. This step is shown in Fig. 117.
5. Crystallographically etch the exposed silicon using KOH. This etch stops on <111> crystallographic planes, and on the boron doped silicon buried layer. This step is shown in Fig. 118.
6. Deposit 10 microns of sacrificial material. Planarize down to oxide using CMP. The sacrificial material temporarily fills the nozzle cavity. This step is shown in Fig. 119.
7. Deposit 0.5 microns of silicon nitride (Si_3N_4).
8. Etch nitride and oxide down to aluminum or sacrificial material using Mask 3. This mask defines the contact vias from the aluminum electrodes to the solenoid, as well as the fixed grill over the nozzle cavity. This step is shown in Fig. 120.
9. Deposit a seed layer of copper. Copper is used for its low resistivity (which results in higher efficiency) and its high electromigration resistance, which increases reliability at high current densities.
10. Spin on 2 microns of resist, expose with Mask 4, and develop. This mask defines the lower side of the solenoid square helix, as well as the lowest layer of the shutter grill vertical stop. The resist acts as an electroplating mold.

This step is shown in Fig. 121.
11. Electroplate 1 micron of copper. This step is shown in Fig. 122.
12. Strip the resist and etch the exposed copper seed layer. This step is shown in Fig. 123.
13. Deposit 0.1 microns of silicon nitride.
14. Deposit 0.5 microns of sacrificial material.
15. Etch the sacrificial material down to nitride using Mask 5. This mask defines the solenoid, the fixed magnetic pole, the pivot, the spring posts, and the middle layer of the shutter grill vertical stop. This step is shown in Fig. 124.
16. Deposit a seed layer of cobalt nickel iron alloy. CoNiFe is chosen due to a high saturation flux density of 2 Tesla, and a low coercivity. [Osaka, Tetsuya et al, A soft magnetic CoNiFe film with high saturation magnetic flux density, Nature 392, 796-798 (1998)].
17. Spin on 3 microns of resist, expose with Mask 6, and develop. This mask defines all of the soft magnetic parts, being the fixed magnetic pole, the pivot, the shutter grill, the lever arm, the spring posts, and the middle layer of the shutter grill vertical stop. The resist acts as an electroplating mold. This step is shown in Fig. 125.
18. Electroplate 2 microns of CoNiFe. This step is shown in Fig. 126.
19. Strip the resist and etch the exposed seed layer. This step is shown in Fig. 127.
20. Deposit 0.1 microns of silicon nitride (Si_3N_4).
21. Spin on 2 microns of resist, expose with Mask 7, and develop. This mask defines the solenoid vertical wire segments, for which the resist acts as an electroplating mold. This step is shown in Fig. 128.
22. Etch the nitride down to copper using the Mask 7 resist.
23. Electroplate 2 microns of copper. This step is shown in Fig. 129.
24. Deposit a seed layer of copper.
25. Spin on 2 microns of resist, expose with Mask 8, and develop. This mask defines the upper side of the solenoid square helix, as well as the upper layer of the shutter grill vertical stop. The resist acts as an electroplating mold. This step is shown in Fig. 130.
26. Electroplate 1 micron of copper. This step is shown in Fig. 131.
27. Strip the resist and etch the exposed copper seed layer, and strip the newly exposed resist. This step is shown in Fig. 132.
28. Deposit 0.1 microns of conformal silicon nitride as a corrosion barrier.
29. Open the bond pads using Mask 9.
30. Wafer probe. All electrical connections are complete at this point, bond pads are accessible, and the chips are not yet separated.
31. Mount the wafer on a glass blank and back-etch the wafer using KOH, with no mask. This etch thins the wafer and stops at the buried boron doped silicon layer. This step is shown in Fig. 133.
32. Plasma back-etch the boron doped silicon layer to a depth of 1 micron using Mask 9. This mask defines the nozzle rim. This step is shown in Fig. 134.
33. Plasma back-etch through the boron doped layer using Mask 10. This mask defines the nozzle, and the edge of the chips. At this stage, the chips are separate, but are still mounted on the glass blank. This step is shown in Fig. 135.
34. Detach the chips from the glass blank. Strip all adhesive, resist, sacrificial, and exposed seed layers. This step is shown in Fig. 136.
35. Mount the print heads in their packaging, which may be a molded plastic former incorporating ink channels which supply different colors of ink to the appropriate regions of the front surface of the wafer. The package also includes a piezoelectric actuator attached to the rear of the ink channels. The piezoelectric actuator provides the oscillating ink pressure required for the ink jet operation.
36. Connect the print heads to their interconnect systems.
37. Hydrophobize the front surface of the print heads.
38. Fill the completed print heads with ink and test them. A filled nozzle is shown in Fig. 137.

Description of IJ10 TF

[0255] In an embodiment, an array of ink jet nozzles is provided with each of the nozzles being under the influence of a outside pulsed magnetic field. The outside pulsed magnetic field causes selected nozzles to eject ink from their ink nozzle chambers.

[0256] Turning to Fig. 138 and Fig. 139, there is illustrated a side perspective view, partly in section, of a single ink jet nozzle 910. Fig. 138 illustrates a nozzle in a quiescent position and Fig. 139 illustrates a nozzle in an ink ejection position. The ink jet nozzle 910 has an ink ejection port 911 for the ejection of ink on demand. The ink jet ejection port 911 is connected to an ink nozzle chamber 912 which is usually filled with ink and supplied from an ink reservoir 913 via holes eg. 915.

[0257] A magnetic actuation device 925 is included and comprises a magnetic soft core 917 which is surrounded by a nitride coating eg. 918. The nitride coating includes an end protuberance 927.

[0258] The magnetic core 917, operates under the influence of an external pulsed magnetic field. Hence, when the external magnetic field is very high, the actuator 925 is caused to move rapidly downwards and to thereby cause the ejection of ink from the ink ejection port 911. Adjacent the actuator 920 is provided a locking mechanism 920 which comprises a thermal actuator which includes a copper resistive circuit having two arms 922, 924. A current is passed through the connected arms 922, 924 thereby causing them to be heated. The arm 922, being of a thinner construction undergoes more resistive heating than the arm 924 which has a much thicker structure. The arm 922 is also of a serpentine nature and is encased in polytetrafluoroethylene (PTFE) which has a high coefficient of thermal expansion, thereby increasing the degree of expansion upon heating. The copper portions expand with the PTFE portions by means of concertinaing. The arm 924 has a thinned portion 929 (Fig. 140) which becomes the concentrated bending region in the resolution of the various forces activated upon heating. Hence, any bending of arm 924 is accentuated in the region 929 and upon heating, the region 929 bends so that end portion 926 (Fig. 138) moves out to block any downward movement of the edge 927 of the actuator 925. Hence, when it is desired to eject an ink drop from a current nozzle chamber, the locking mechanism 920 is not activated and as a result ink is ejected from the ink ejection port during the next external magnetic pulse phase. When a current nozzle is not to eject ink, the locking mechanism 920 is activated to block any movement of the actuator 925 and therefore stop the ejection of ink from the chamber.

[0259] Importantly, the actuator 920 is located within a cavity 928 such that the volume of ink flowing past arm 922 is extremely low whereas the arm 924 receives a much larger volume of ink flow during operation.

[0260] Turning now to Fig. 140, there is illustrated an exploded perspective view of a single ink jet nozzle 910 illustrating the various layers which make up the nozzle. The nozzle 910 can be constructed on a semiconductor wafer utilizing standard semiconductor processing techniques in addition to those techniques commonly used for the construction of micro-electromechanical systems (MEMS). For a general introduction to a micro-electro mechanical system (MEMS) reference is made to standard proceedings in this field including the proceedings of the SPIE (International Society for Optical Engineering), volumes 2642 and 2882 which contain the proceedings for recent advances and conferences in this field. At the bottom level 930 is constructed the nozzle plate including the ink ejection port 911. The nozzle plate 930 can be constructed from a buried boron doped epitaxial layer of a silicon wafer which has been back etched to the point of the epitaxial layer. The epitaxial layer itself is then etched utilizing a mask so as to form the nozzle rim (not shown) and the nozzle hole 911.

[0261] Next, is the silicon wafer layer 932 which is etched so as to include the nozzle chamber 912. The silicon layer 932 can be etched to contain substantially vertical side walls through the utilisation of high density, low pressure plasma etching such as that available from Surface Technology Systems and subsequently filled with sacrificial material which will be later etched away.

[0262] On top of the silicon layer is deposited a two level CMOS circuitry layer 933 which comprises substantially glass in addition to the usual metal and poly layers. The layer 933 includes the formation of the heater element contacts which can be constructed from copper. The PTFE layer 935 can be provided as a departure from normal construction with a bottom PTFE layer being first deposited followed by the copper layer 934 and a second PTFE layer to cover the copper layer 934.

[0263] Next, a nitride passivation layer 936 is provided which acts to provide a passivation surface for the lower layers in addition to providing a base for a soft magnetic Nickel Ferrous layer 917 which forms the magnetic actuator portion of the actuator 925. The nitride layer 936 includes bending portions 940 utilized in the bending of the actuator.

[0264] Next a nitride passivation layer 939 is provided so as to passivate the top and side surfaces of the nickel iron (NiFe) layer 917.

[0265] One form of detailed manufacturing process which can be used to fabricate monolithic ink jet print heads operating in accordance with the principles taught by the present embodiment can proceed utilizing the following steps:

1. Using a double sided polished wafer deposit 3 microns of epitaxial silicon heavily doped with boron.
2. Deposit 10 microns of epitaxial silicon, either p-type or n-type, depending upon the CMOS process used.
3. Complete drive transistors, data distribution, and timing circuits using a 0.5 micron, one poly, 2 metal CMOS process. Relevant features of the wafer at this step are shown in Fig. 142. For clarity, these diagrams may not be to scale, and may not represent a cross section though any single plane of the nozzle. Fig. 141 is a key to representations of various materials in these manufacturing diagrams, and those of other cross referenced ink jet configurations.
4. Etch the CMOS oxide layers down to silicon or aluminum using Mask 1. This mask defines the nozzle chamber, and the edges of the print head chips. This step is shown in Fig. 143.
5. Crystallographically etch the exposed silicon using, for example, KOH or EDP (ethylenediamine pyrocatechol). This etch stops on <111> crystallographic planes, and on the boron doped silicon buried layer. This step is shown in Fig. 144.

6. Deposit 0.5 microns of silicon nitride (Si_3N_4).
7. Deposit 10 microns of sacrificial material. Planarize down to one micron over nitride using CMP. The sacrificial material temporarily fills the nozzle cavity. This step is shown in Fig. 145.
8. Deposit 0.5 microns of polytetrafluoroethylene (PTFE).
9. Etch contact vias in the PTFE, the sacrificial material, nitride, and CMOS oxide layers down to second level metal using Mask 2. This step is shown in Fig. 146.
10. Deposit 1 micron of titanium nitride (TiN).
11. Etch the TiN using Mask 3. This mask defines the heater pattern for the hot arm of the catch actuator, the cold arm of the catch actuator, and the catch. This step is shown in Fig. 147.
12. Deposit 1 micron of PTFE.
13. Etch both layers of PTFE using Mask 4. This mask defines the sleeve of the hot arm of the catch actuator. This step is shown in Fig. 148.
14. Deposit a seed layer for electroplating.
15. Spin on 11 microns of resist, and expose and develop the resist using Mask 5. This mask defines the magnetic paddle. This step is shown in Fig. 149.
16. Electroplate 10 microns of ferromagnetic material such as nickel iron (NiFe). This step is shown in Fig. 150.
17. Strip the resist and etch the seed layer.
18. Deposit 0.5 microns of low stress PECVD silicon nitride.
19. Etch the nitride using Mask 6, which defines the spring. This step is shown in Fig. 151.
20. Mount the wafer on a glass blank and back-etch the wafer using KOH with no mask. This etch thins the wafer and stops at the buried boron doped silicon layer. This step is shown in Fig. 152.
21. Plasma back-etch the boron doped silicon layer to a depth of 1 micron using Mask 7. This mask defines the nozzle rim. This step is shown in Fig. 153.
22. Plasma back-etch through the boron doped layer using Mask 8. This mask defines the nozzle, and the edge of the chips.
23. Plasma back-etch nitride up to the glass sacrificial layer through the holes in the boron doped silicon layer. At this stage, the chips are separate, but are still mounted on the glass blank. This step is shown in Fig. 154.
24. Strip the adhesive layer to detach the chips from the glass blank.
25. Etch the sacrificial layer. This step is shown in Fig. 155.
26. Mount the print heads in their packaging, which may be a molded plastic former incorporating ink channels which supply different colors of ink to the appropriate regions of the front surface of the wafer.
27. Connect the print heads to their interconnect systems.
28. Hydrophobize the front surface of the print heads.
29. Fill the completed print heads with ink, apply an oscillating magnetic field, and test the print heads. This step is shown in Fig. 156.

Description of IJ11 F

[0266] In an embodiment, there is provided an ink jet nozzle and chamber filled with ink. Within said jet nozzle chamber is located a static coil and a moveable coil. When energized, the static and movable coils are attracted towards one another, loading a spring. The ink drop is ejected from the nozzle when the coils are de-energized. Turn now to Fig. 157 to Fig. 160, there is illustrated schematically the operation of an embodiment. In Fig. 157, there is shown a single ink jet nozzle chamber 1010 having an ink ejection port 1011 and ink meniscus in this position 1012. Inside the nozzle chamber 1010 are located a fixed or static coil 1014 and a moveable coil 1015. The arrangement of Fig. 157 illustrates the quiescent state in the inkjet nozzle chamber.

[0267] The two coils are then energised resulting in an attraction to one another. This results in the movable plate 1015 moving towards the static or fixed plate 1014 as illustrated in Fig. 158. As a result of the movement, springs 1018,1019 are loaded. Additionally, the movement of coil 1015 may cause ink to flow out of the chamber 1010 in addition to a change in the shape of the meniscus 1012. The coils are energised for long enough for the moving coil 1015 to reach its position (approximate two microseconds). The coil currents are then turned to a lower "level" while the nozzle fills. The keeper power can be substantially less than the maximum current level utilised to move the plate 1015 because the magnetic gap between the plates 1014 and 1015 is at a minimum when the moving coil 1015 is at its stop position. The surface tension on the meniscus 1012 inserts a net force on the ink which results in nozzle refilling as illustrated in Fig. 159. The nozzle refilling replaces the volume of the piston withdrawal with ink in a process which should take approximately 100 microseconds.

[0268] Turning to Fig. 160, the coil current is then turned off and the moveable coil 1015 acts as a plunger which is accelerated to its normal position by the springs 1018, 1019 as illustrated in Fig. 160. The spring force on the plunger coil 1015 will be greatest at the beginning of its stroke and slows as the spring elastic stress falls to zero. As a result,

the acceleration of plunger plate 1015 is high at the beginning of the stroke but decreases during the stroke resulting in a more uniform ink velocity during the stroke. The movement plate 1015 causes the meniscus to bulge and break off performing ink drop 1020. The plunger coil 1015 in turn settles in its quiescent position until the next drop ejection cycle.

[0269] Turning now to Fig. 161, there is illustrated a perspective view of one form of construction of an ink jet nozzle 1010. The ink jet nozzle 1010 can be constructed on a silicon wafer base 1022 as part of a large array of nozzles 1010 which can be formed for the purposes of providing a print head having a certain dpi, for example, a 1600 dpi print head. The print head 1010 can be constructed utilizing advanced silicon semi-conductor fabrication and micro machining and micro fabrication process technology. The wafer is first processed to include lower level drive circuitry (not shown) before being finished off with a two microns thick dioxide layer 1022 with appropriate vias for interconnection. Preferably, the CMOS layer can include one level of metal for providing basic interconnects. On top of the glass layer 1022 is constructed a nitride layer 1023 in which is embedded two coil layers 1025 and 1026. The coil layers 1025, 1026 can be embedded within the nitride layer 1023 through the utilisation of the well-known dual damascene process and chemical mechanical planarization techniques ("Chemical Mechanical Planarisation of Micro Electronic Materials" by Sterger Wald et al published 1997 by John Wiley and Sons Inc., New York, New York). The two coils 1025,1026 are interconnected utilizing a fire at their central point and are further connected, by appropriate vias at ends 1028,1029 to the end points 1028,1029. Similarly, the moveable coil can be formed from two copper coils 1031,1032 which are encased within a further nitride layer 1033. The copper coil 1031,1032 and nitride layer 1033 also include torsional springs 1036-1039 which are formed so that the top moveable coil has a stable state away from the bottom fixed coil. Upon passing a current through the various copper coils, the top copper coils 1031,1032 are attracted to the bottom copper coils 1025,1026 thereby resulting in a loading being placed on the torsional springs 1036-1039 such that, when the current is turned off, the springs 1036-1039 act to move the top moveable coil to its original position. The nozzle chamber can be formed via nitride wall portions e.g. 1040,1041 having slots between adjacent wall portions. The slots allow for the flow of ink into the chamber as required. A top nitride plate 1044 is provided to cap the top of the internals of 1010 and to provide in flow channel support. The nozzle plate 1044 includes a series of holes 1045 provided to assist in sacrificial etching of lower level layers. Also provided is the ink injection nozzle 1011 having a ridge around its side so as to assist in resisting any in flow on to the outside surface of the nozzle 1010. The etched through holes 1045 are of much smaller diameter than the nozzle hole 1011 and, as such, surface tension will act to retain the ink within the through holes of 1045 whilst simultaneously the injection of ink from nozzle 1011.

[0270] As mentioned previously, the various layers of the nozzle 1010 can be constructed in accordance with standard semi-conductor and micro mechanical techniques. These techniques utilize the dual damascene process as mentioned earlier in addition to the utilisation of sacrificial etch layers to provide support for structures which are later released by means of etching the sacrificial layer.

[0271] The ink can be supplied within the nozzle 1010 by standard techniques such as providing ink channels along the side of the wafer so as to allow the flow of ink into the area under the surface of nozzle plate 1044. Alternatively, ink channel portals can be provided through the wafer via means of utilisation of a high density low pressure plasma etch processing system such as that available from surface technology system and known as their Advanced Silicon Edge (ASE) process. The etched portals 1045 being so small that surface tension affects not allow the ink to leak out of the small portal holes. In Fig. 162, there is shown a final assembled ink jet nozzle ready for the ejection of ink.

[0272] One form of detailed manufacturing process which can be used to fabricate monolithic ink jet print heads operating in accordance with the principles taught by the present embodiment can proceed utilizing the following steps:

1. Using a double sided polished wafer, Complete drive transistors, data distribution, and timing circuits using a 0.5 micron, one poly, 2 metal CMOS process. This step is shown in Fig. 164. For clarity, these diagrams may not be to scale, and may not represent a cross section though any single plane of the nozzle. Fig. 163 is a key to representations of various materials in these manufacturing diagrams, and those of other cross referenced ink jet configurations.
2. Deposit 0.5 microns of low stress PECVD silicon nitride (Si_3N_4). The nitride acts as a dielectric, and etch stop, a copper diffusion barrier, and an ion diffusion barrier. As the speed of operation of the print head is low, the high dielectric constant of silicon nitride is not important, so the nitride layer can be thick compared to sub-micron CMOS back-end processes.
3. Etch the nitride layer using Mask 1. This mask defines the contact vias from the solenoid coil to the second-level metal contacts. This step is shown in Fig. 165.
4. Deposit 1 micron of PECVD glass.
5. Etch the glass down to nitride or second level metal using Mask 2. This mask defines first layer of the fixed solenoid. This step is shown in Fig. 166.
6. Deposit a thin barrier layer of Ta or TaN.
7. Deposit a seed layer of copper. Copper is used for its low resistivity (which results in higher efficiency) and its

high electromigration resistance, which increases reliability at high current densities.

8. Electroplate 1 micron of copper.

9. Planarize using CMP. Steps 2 to 9 represent a copper dual damascene process. This step is shown in Fig. 167.

10. Deposit 0.5 microns of low stress PECVD silicon nitride.

11. Etch the nitride layer using Mask 3. This mask defines the defines the vias from the second layer to the first layer of the fixed solenoid. This step is shown in Fig. 168.

12. Deposit 1 micron ofPECVD glass.

13. Etch the glass down to nitride or copper using Mask 4. This mask defines second layer of the fixed solenoid. This step is shown in Fig. 169.

14. Deposit a thin barrier layer and seed layer.

15. Electroplate 1 micron of copper.

16. Planarize using CMP. Steps 10 to 16 represent a second copper dual damascene process. This step is shown in Fig. 170.

17. Deposit 0.5 microns of low stress PECVD silicon nitride.

18. Deposit 0.1 microns of PTFE. This is to hydrophobize the space between the two solenoids, so that when the nozzle fills with ink, this space forms an air bubble. The allows the upper solenoid to move more freely.

19. Deposit 4 microns of sacrificial material. This forms the space between the two solenoids.

20. Deposit 0.1 microns of low stress PECVD silicon nitride.

21. Etch the nitride layer, the sacrificial layer, the PTFE layer, and the nitride layer of step 17 using Mask 5. This mask defines the vias from the first layer of the moving solenoid to the second layer the fixed solenoid. This step is shown in Fig. 171.

22. Deposit I micron of PECVD glass.

23. Etch the glass down to nitride or copper using Mask 6. This mask defines first layer of the moving solenoid. This step is shown in Fig. 172.

24. Deposit a thin barrier layer and seed layer.

25. Electroplate 1 micron of copper.

26. Planarize using CMP. Steps 20 to 26 represent a third copper dual damascene process. This step is shown in Fig. 173.

27. Deposit 0.1 microns of low stress PECVD silicon nitride.

28. Etch the nitride layer using Mask 7. This mask defines the vias from the second layer the moving solenoid to the first layer of the moving solenoid. This step is shown in Fig. 174.

29. Deposit 1 micron of PECVD glass.

30. Etch the glass down to nitride or copper using Mask 8. This mask defines second layer of the moving solenoid. This step is shown in Fig. 175.

31. Deposit a thin barrier layer and seed layer.

32. Electroplate 1 micron of copper.

33. Planarize using CMP. Steps 27 to 33 represent a fourth copper dual damascene process. This step is shown in Fig. 176.

34. Deposit 0.1 microns of low stress PECVD silicon nitride.

35. Etch the nitride using Mask 9. This mask defines the moving solenoid, including its springs, and allows the sacrificial material in the space between the solenoids to be etched. It also defines the bond pads. This step is shown in Fig. 177.

36. Wafer probe. All electrical connections are complete at this point, bond pads are accessible, and the chips are not yet separated.

37. Deposit 10 microns of sacrificial material.

38. Etch the sacrificial material using Mask 10. This mask defines the nozzle chamber wall. This step is shown in Fig. 178.

39. Deposit 3 microns of PECVD glass.

40. Etch to a depth of 1 micron using Mask 11. This mask defines the nozzle rim. This step is shown in Fig. 179.

41. Etch down to the sacrificial layer using Mask 12. This mask defines the roof of the nozzle chamber, and the nozzle itself. This step is shown in Fig. 180.

42. Back-etch completely through the silicon wafer (with, for example, an ASE Advanced Silicon Etcher from Surface Technology Systems) using Mask 7. This mask defines the ink inlets which are etched through the wafer. The wafer is also diced by this etch. This step is shown in Fig. 181.

43. Etch the sacrificial material. The nozzle chambers are cleared, the actuators freed, and the chips are separabed by this etch. This step is shown in Fig. 182.

44. Mount the print heads in their packaging, which may be a molded plastic former incorporating ink channels which supply the appropriate color ink to the ink inlets at the back of the wafer.

45. Connect the print heads to their interconnect systems. For a low profile connection with minimum disruption of airflow, TAB may be used. Wire bonding may also be used if the printer is to be operated with sufficient clearance to the paper.
46. Hydrophobize the front surface of the print heads.
47. Fill the completed print heads with ink and test them. A filled nozzle is shown in Fig. 183.

Description of IJ12 F

[0273] In an embodiment, a linear stepper motor is utilized to control a plunger device. The plunger device compressing ink within a nozzle chamber so as to thereby cause the ejection of ink from the chamber on demand.

[0274] Turning to Fig. 184, there is illustrated a single nozzle arrangement 1110 as constructed in accordance with an embodiment The nozzle arrangement 1110 includes a nozzle chamber 1111 into which ink flows via a nozzle chamber filter portion 1114 which includes a series of posts which filter out foreign bodies in the ink in flow. The nozzle chamber 1111 includes an ink ejection port 1115 for the ejection of ink on demand. Normally, the nozzle chamber 1111 is fllled with ink.

[0275] A linear actuator 1116 is provided for rapidly compressing a nickel ferrous plunger 1118 into the nozzle chamber 1111 so as to compress the volume of ink within chamber 1111 to thereby cause ejection of drops from the ink ejection port 1115. The plunger 1118 is connected to the stepper moving pole device 1116 which is actuated by means of a three phase arrangement of electromagnets 1120 to 1131. The electromagnets are driven in three phases with electro magnets 1120, 1126, 1123 and 1129 being driven in a first phase, electromagnets 1121, 1127, 1124, 1130 being driven in a second phase and electromagnets 1122, 1128, 1125, 1131 being driven in a third phase. The electromagnets are driven in a reversible manner so as to de-actuate plunger 1118 via actuator 1116. The actuator 1116 is guided at one end by a means of guide 1133, 1134. At the other end, the plunger 1118 is coated with a hydrophobic material such as polytetrafluoroethylene (PTFE) which can form a major part of the plunger 1118. The PTFE acts to repel the ink from the nozzle chamber 1111 resulting in the creation of a membrane eg. 1138, 1139 between the plunger 1118 and side walls eg. 1136, 1137. The surface tension characteristics of the membranes 1138, 1139 act to balanced one another thereby guiding the plunger 1118 within the nozzle chamber. The meniscus eg. 1138, 1139 further stops ink from flowing out of the chamber 1111 and hence the electromagnets 1120 to 1131 can be operated in normal air.

[0276] The nozzle arrangement 1110 is therefore operated to eject drops on demand by means of activating the actuator 1116 by appropriately synchronized driving of electromagnets 1120 to 1131. The actuation of the actuator 1116 results in the plunger 1118 moving towards the nozzle ink ejection port 1115 thereby causing ink to be ejected from the port 1115.

[0277] Subsequently, the electromagnets are driven in reverse thereby moving the plunger in an opposite direction resulting in the in flow of ink from an ink supply connected to the ink inlet port 1114.

[0278] Preferably, multiple ink nozzle arrangements 1110 can be constructed adjacent to one another to form a multiple nozzle ink ejection mechanism. The nozzle arrangements 1110 are preferably constructed in an array print head constructed on a single silicon wafer which is subsequently diced in accordance with requirements. The diced print heads can then be interconnected to an ink supply which can comprise a through chip ink flow or ink flow from the side of a chip.

[0279] Turning now to Fig. 185, there is shown an exploded perspective of the various layers of the nozzle arrangement 1110. The nozzle arrangement can be constructed on top of a silicon wafer 1140 which has a standard electronic circuitry layer such as a two level metal CMOS layer 1141. The two metal CMOS provides the drive and control circuitry for the ejection of ink from the nozzles by interconnection of the electromagnets to the CMOS layer. On top of the CMOS layer 1141 is a nitride passivation layer 1142 which passivates the lower layers against any ink erosion in addition to any etching of the lower CMOS glass layer should a sacrificial etching process be utilized in the construction of the nozzle arrangement 1110.

[0280] On top of the nitride layer 1142 is constructed various other layers. The wafer layer 1140, the CMOS layer 1141 and the nitride passivation layer 1142 are constructed with the appropriate fires for interconnecting to the above layers. On top of the nitride layer 1142 is constructed a bottom copper layer 1143 which interconnects with the CMOS layer 1141 as appropriate. Next, a nickel ferrous layer 1145 is constructed which includes portions for the core of the electromagnets and the actuator 1116 and guides 1131, 1132. On top of the NiFe layer 1145 is constructed a second copper layer 1146 which forms the rest of the electromagnetic device. The copper layer 1146 can be constructed utilizing a dual damascene process. Next a PTFE layer 1147 is laid down followed by a nitride layer 1148 which includes the side filter portions and side wall portions of the nozzle chamber. In the top of the nitride layer 1148, the ejection port 1115 and the rim 1151 are constructed by means of etching. In the top of the nitride layer 1148 is also provided a number of apertures 1150 which are provided for the sacrificial etching of any sacrificial material utilized in the construction of the various lower layers including the nitride layer 1148.

[0281] It will be understood by those skilled in the art of construction of micro-electro-mechanical systems (MEMS)

that the various layers 1143, 1145 to 1148 can be constructed by means of utilizing a sacrificial material to deposit the structure of various layers and subsequent etching away of the sacrificial material as to release the structure of the nozzle arrangement 1110.

[0282] For a general introduction to a micro-electro mechanical system (MEMS) reference is made to standard proceedings in this field including the proceedings of the SPIE (International Society for Optical Engineering), volumes 2642 and 2882 which contain the proceedings for recent advances and conferences in this field.

[0283] One form of detailed manufacturing process which can be used to fabricate monolithic ink jet print heads operating in accordance with the principles taught by the present embodiment can proceed utilizing the following steps:

1. Using a double sided polished wafer, Complete drive transistors, data distribution, and timing circuits using a 0.5 micron, one poly, 2 metal CMOS process. This step is shown in Fig. 187. For clarity, these diagrams may not be to scale, and may not represent a cross section though any single plane of the nozzle. Fig. 186 is a key to representations of various materials in these manufacturing diagrams, and those of other cross referenced ink jet configurations.
2. Deposit 1 micron of sacrificial material.
3. Etch the sacrificial material and the CMOS oxide layers down to second level metal using Mask 1. This mask defines the contact vias from the second level metal electrodes to the solenoids. This step is shown in Fig. 188.
4. Deposit a barrier layer of titanium nitride (TiN) and a seed layer of copper.
5. Spin on 2 microns of resist, expose with Mask 2, and develop. This mask defines the lower side of the solenoid square helix. The resist acts as an electroplating mold. This step is shown in Fig. 189.
6. Electroplate 1 micron of copper. Copper is used for its low resistivity (which results in higher efficiency) and its high electromigration resistance, which increases reliability at high current densities. This step is shown in Fig. 193.
7. Strip the resist and etch the exposed barrier and seed layers. This step is shown in Fig. 190.
8. Deposit 0.1 microns of silicon nitride.
9. Deposit a seed layer of cobalt nickel iron alloy. CoNiFe is chosen due to a high saturation flux density of 2 Tesla, and a low coercivity. [Osaka, Tetsuya et al, A soft magnetic CoNiFe film with high saturation magnetic flux density, Nature 392, 796-798 (1998)].
10. Spin on 3 microns of resist, expose with Mask 3, and develop. This mask defines all of the soft magnetic parts, being the fixed magnetic pole of the solenoids, the moving poles of the linear actuator, the horizontal guides, and the core of the ink pusher. The resist acts as an electroplating mold. This step is shown in Fig. 191.
11. Electroplate 2 microns of CoNiFe. This step is shown in Fig. 192.
12. Strip the resist and etch the exposed seed layer. This step is shown in Fig. 193.
13. Deposit 0.1 microns of silicon nitride (Si_3N_4).
14. Spin on 2 microns of resist, expose with Mask 4, and develop. This mask defines the solenoid vertical wire segments, for which the resist acts as an electroplating mold. This step is shown in Fig. 194.
15. Etch the nitride down to copper using the Mask 4 resist.
16. Electroplate 2 microns of copper. This step is shown in Fig. 195.
17. Deposit a seed layer of copper.
18. Spin on 2 microns of resist, expose with Mask 5, and develop. This mask defines the upper side of the solenoid square helix. The resist acts as an electroplating mold. This step is shown in Fig. 196.
19. Electroplate 1 micron of copper. This step is shown in Fig. 197.
20. Strip the resist and etch the exposed copper seed layer, and strip the newly exposed resist. This step is shown in Fig. 198.
21. Open the bond pads using Mask 6.
22. Wafer probe. All electrical connections are complete at this point, bond pads are accessible, and the chips are not yet separated.
23. Deposit 5 microns of PTFE.
24. Etch the PTFE down to the sacrificial layer using Mask 7. This mask defines the ink pusher. This step is shown in Fig. 199.
25. Deposit 8 microns of sacrificial material. Planarize using CMP to the top of the PTFE ink pusher. This step is shown in Fig. 200.
26. Deposit 0.5 microns of sacrificial material. This step is shown in Fig. 201.
27. Etch all layers of sacrificial material using Mask 8. This mask defines the nozzle chamber wall. This step is shown in Fig. 202.
28. Deposit 3 microns of PECVD glass.
29. Etch to a depth of (approx.) 1 micron using Mask 9. This mask defines the nozzle rim. This step is shown in Fig. 203.
30. Etch down to the sacrificial layer using Mask 10. This mask defines the roof of the nozzle chamber, the nozzle,

and the sacrificial etch access holes. This step is shown in Fig. 204.

31. Back-etch completely through the silicon wafer (with, for example, an ASE Advanced Silicon Etcher from Surface Technology Systems) using Mask 11. Continue the back-etch through the CMOS glass layers until the sacrificial layer is reached. This mask defines the ink inlets which are etched through the wafer. The wafer is also diced by this etch. This step is shown in Fig. 205.

32. Etch the sacrificial material. The nozzle chambers are cleared, the actuators freed, and the chips are separated by this etch. This step is shown in Fig. 206.

33. Mount the print heads in their packaging, which may be a molded plastic former incorporating ink channels which supply the appropriate color ink to the ink inlets at the back of the wafer. The package also includes a piezoelectric actuator attached to the rear of the ink channels. The piezoelectric actuator provides the oscillating ink pressure required for the inkjet operation.

34. Connect the print heads to their interconnect systems. For a low profile connection with minimum disruption of airflow, TAB may be used. Wire bonding may also be used if the printer is to be operated with sufficient clearance to the paper.

35. Hydrophobize the front surface of the print heads.

36. Fill the completed print heads with ink and test them. A filled nozzle is shown in Fig. 207.

[0284] Further, it would be readily understood that various other forms of construction, including substitution of various materials for other suitable materials and variations in the utilisation of nitride passivation layers will be readily evident to those skilled in the art_1 with an embodiment providing a merely illustrative example of the present invention.

Description of IJ13 S

[0285] In an embodiment, an ink jet nozzle chamber is provided having a shutter mechanism which open and closes over a nozzle chamber. The shutter mechanism includes a ratcheted drive which slides open and closed. The ratcheted drive is driven by a gearing mechanism which in turn is driven by a drive actuator which is activated by passing an electric current through the drive actuator in a magnetic field. The actuator force is "geared down" so as to drive a ratchet and pawl mechanism to thereby open and shut the shutter over a nozzle chamber.

[0286] Turning to Fig. 208, there is illustrated a single nozzle arrangement 1210 as shown in an open position. The nozzle arrangement 1210 includes a nozzle chamber 1212 having an anisotropic <111> crystallographic etched pit which is etched down to what is originally a boron doped buried epitaxial layer 1213 which includes a nozzle rim 1214 and a nozzle ejection port 1215 which ejects ink. The ink flows in through a fluid passage 1216 when the aperture 1216 is open. The ink flowing through passage 1216 flows from an ink reservoir which operates under an oscillating ink pressure. When the shutter is open, ink is ejected from the ink ejection port 1215. The shutter mechanism includes a plate 1217 which is driven via means of guide slots 1218, 1219 to a closed position. The driving of the nozzle plate is via a latch mechanism 1220 with the plate structure being kept in a correct path by means of retainers 1222 to 1225.

[0287] The nozzle arrangement 1210 can be constructed utilising a two level poly process which can be a standard micro-electro mechanical system production technique (MEMS). For a general introduction to a micro-electro mechanical system (MEMS) reference is made to standard proceedings in this field including the proceedings of the SPIE (International Society for Optical Engineering), volumes 2642 and 2882 which contain the proceedings for recent advances and conferences in this field. The plate 1217 can be constructed from a first level polysilicon and the retainers 1222 to 1225 can be constructed from a lower first level poly portion and a second level poly portion, as it is more apparent from the exploded perspective view illustrated in Fig. 209.

[0288] The bottom circuit of plate 1217 includes a number of pits 1227 which are provided on the bottom surface of plate 1217 so as to reduce stiction effects.

[0289] The ratchet mechanism 1220 is driven by a gearing arrangement which includes first gear wheel 1230, second gear wheel 1231 and third gear wheel 1232. These gear wheels 1230 to 1232 are constructed utilising two level poly which each gear wheel being constructed around a corresponding central pivot 1235 to 1237. The gears 1230 to 1232 operate to gear down the ratchet speed with the gears being driven by a gear actuator mechanism 1240.

[0290] Turning to Fig. 209 there is illustrated an exploded perspective view of a single nozzle chamber 1210. The actuator 1240 comprises mainly a copper circuit having a drive end 1242 which engages and drives the cogs 1243 of the gear wheel 1232. The copper portion includes serpentine sections 1245, 1246 which concertina upon movement of the end 1242. The end 1242 is actuated by means of passing an electric current through the copper portions in the presence of a magnetic field perpendicular to the surface of the wafer such that the interaction of the magnetic field and circuit result in a Lorenz force acting on the actuator 1240 so as to move the end 1242 to drive the cogs 1243. The copper portions are mounted on aluminium disks 1248, 1249 which are connected to lower levels of circuitry on the wafer upon which actuator 1240 is mounted.

[0291] Returning to Fig. 208, the actuator 1240 can be driven at a high speed with the gear wheels 1230 to 1232

acting to gear down the high speed driving of actuator 1240 so as to drive ratchet mechanism 1220 open and closed on demand. Hence, when it is desired to eject a drop of ink from nozzle 1215, the shutter is opened by means of driving actuator 1240. Upon the next high pressure part of the oscillating pressure cycle, ink will be ejected from the nozzle 1215. If no ink is to be ejected from a subsequent cycle, a second actuator 1250 is utilized to drive the gear wheel in the opposite direction thereby resulting in the closing of the shutter plate 1217 over the nozzle chamber 1212 resulting in no ink being ejected in subsequent pressure cycles. The pits 1227 act to reduce the forces required for driving the shutter plate 1217 to an open and closed position.

[0292] Turning to Fig. 210, there is illustrated a top cross-sectional view illustrating the various layers making up a single nozzle chamber 1210. The nozzle chambers can be formed as part of an array of nozzle chambers making up a single print head which in turn forms part of an army of print head fabricated on a semiconductor wafer in accordance with in accordance with the semiconductor wafer fabrication techniques well known to those skilled in the art of MEMS fabrication and construction.

[0293] The bottom boron layer 1213 can be formed from the processing step of back etching a silicon wafer utilizing a buried epitaxial boron doped layer as the etch stop. Further processing of the boron layer can be undertaken so as to define the nozzle hole 1215 which can include a nozzle rim 1214.

[0294] The next layer is a silicon glass layer 1252 which normally sits on top of the boron doped layer 1213. The silicon glass layer 1252 includes an anisotropically etched pit 1212 so as to define the structure of the nozzle chamber. On top of the silicon layer 1252 is provided a glass layer 1254 which includes the various electrical circuitry (not shown) for driving the actuators. The layer 1254 is passivated by means of a nitride layer 1256 which includes trenches 1257 for passivating the side walls of glass layer 1254.

[0295] On top of the passivation layer 1256 is provided a first level polysilicon layer 1258 which defines the shutter and various cog wheels. The second poly layer 1259 includes the various retainer mechanisms and gear wheel 1231. Next, a copper layer 1260 is provided for defining the copper circuit actuator. The copper 1260 is interconnected with lower portions of glass layer 1254 for forming the circuit for driving the copper actuator.

[0296] The nozzle chamber 1210 can be constructed utilizing the standard MEMS processes including forming the various layers utilizing the sacrificial material such as silicon dioxide and subsequently sacrificially etching the lower layers away.

[0297] Subsequently, wafers that contain a series of print heads can be diced into separate print heads and a print head mounted on a wall of an ink supply chamber having a piezo electric oscillator actuator for the control of pressure in the ink supply chamber. Ink is then ejected on demand by opening the shutter plate 1217 during periods of high oscillation pressure so as to eject ink. The nozzles being actuated by means of placing the print head in a strong magnetic field utilizing permanent magnets or electro- magnetic devices and driving current through the actuators e. g. 1240, 1250 as required to open and close the shutter and thereby eject drops of ink on demand.

[0298] One form of detailed manufacturing process which can be used to fabricate monolithic ink jet print heads operating in accordance with the principles taught by the present embodiment can proceed utilizing the following steps:

1. Using a double sided polished wafer deposit 3 microns of epitaxial silicon heavily doped with boron.
2. Deposit 10 microns of n/n^+ epitaxial silicon. Note that the epitaxial layer is substantially thicker than required for CMOS. This is because the nozzle chambers are crystallographically etched from this layer. This step is shown in Fig. 212. Fig. 211 is a key to representations of various materials in these manufacturing diagrams. For clarity, these diagrams may not be to scale, and may not represent a cross section though any single plane of the nozzle.
3. Crystallographically etch the epitaxial silicon using, for example, KOH or EDP (ethylenediamine pyrocatechol) using MEMS Mask 1. This mask defines the nozzle cavity. This etch stops on <111> crystallographic planes, and on the boron doped silicon buried layer. This step is shown in Fig. 213.
4. Deposit 12 microns of low stress sacrificial oxide. Planarize down to silicon using CMP. The sacrificial material temporarily fills the nozzle cavity. This step is shown in Fig. 214.
5. Begin fabrication of the drive transistors, data distribution, and timing circuits using a CMOS process. The MEMS processes which form the mechanical components of the inkjet are interleaved with the CMOS device fabrication steps. The example given here is of a I micron, 2 poly, 2 metal retrograde P-well process. The mechanical components are formed from the CMOS polysilicon layers. For clarity, the CMOS active components are omitted.
6. Grow the field oxide using standard LOCOS techniques to a thickness of 0.5 microns. As well as the isolation between transistors, the field oxide is used as a MEMS sacrificial layer, so inkjet mechanical details are incorporated in the active area mask. The MEMS features of this step are shown in Fig. 215.
7. Perform the PMOS field threshold implant. The MEMS fabrication has no effect on this step except in calculation of the total thermal budget.
8. Perform the retrograde P-well and NMOS threshold adjust implants using the P-well mask. The MEMS fabrication has no effect on this step except in calculation of the total thermal budget.
9. Perform the PMOS N-tub deep phosphorus punch through control implant and shallow boron implant. The MEMS

fabrication has no effect on this step except in calculation of the total thermal budget.

10. Deposit and etch the first polysilicon layer. As well as gates and local connections, this layer includes the lower layer of MEMS components. This includes the lower layer of gears, the shutter, and the shutter guide. It is preferable that this layer be thicker than the normal CMOS thickness. A polysilicon thickness of 1 micron can be used. The MEMS features of this step are shown in Fig. 215.

11. Perform the NMOS lightly doped drain (LDD) implant. This process is unaltered by the inclusion of MEMS in the process flow.

12. Perform the oxide deposition and RIE etch for polysilicon gate sidewall spacers. This process is unaltered by the inclusion of MEMS in the process flow.

13. Perform the NMOS source/drain implant. The extended high temperature anneal time to reduce stress in the two polysilicon layers must be taken into account in the thermal budget for diffusion of this implant. Otherwise, there is no effect from the MEMS portion of the chip.

14. Perform the PMOS source/drain implant. As with the NMOS source/drain implant, the only effect from the MEMS portion of the chip is on thermal budget for diffusion of this implant.

15. Deposit 1 micron of glass as the first inter level dielectric and etch using the CMOS contacts mask. The CMOS mask for this level also contains the pattern for the MEMS inter-poly sacrificial oxide. The MEMS features of this step are shown in Fig. 216.

16. Deposit and etch the second polysilicon layer. As well as CMOS local connections, this layer includes the upper layer of MEMS components. This includes the upper layer of gears and the shutter guides. A polysilicon thickness of 1 micron can be used. The MEMS features of this step are shown in Fig. 217.

17. Deposit 1 micron of glass as the second interlevel dielectric and etch using the CMOS via 1 mask. The CMOS mask for this level also contains the pattern for the MEMS actuator contacts.

18. Metal 1 deposition and etch. Metal 1 should be non-corrosive in water, such as gold or platinum, if it is to be used as the Lorenz actuator. The MEMS features of this step are shown in Fig. 218.

19. Third interlevel dielectric deposition and etch as shown in Fig. 219. This is the standard CMOS third interlevel dielectric. The mask pattern includes complete coverage of the MEMS area.

20. Metal 2 deposition and etch. This is the standard CMOS metal 2. The mask pattern includes no metal 2 in the MEMS area.

21. Deposit 0.5 microns of silicon nitride (Si_3N_4) and etch using MEMS Mask 2. This mask defines the region of sacrificial oxide etch performed in step 26. The silicon nitride aperture is substantially undersized, as the sacrificial oxide etch is isotropic. The CMOS devices must be located sufficiently far from the MEMS devices that they are not affected by the sacrificial oxide etch. The MEMS features of this step are shown in Fig. 220.

22. Mount the wafer on a glass blank and back-etch the wafer using KOH with no mask. This etch thins the wafer and stops at the buried boron doped silicon layer. The MEMS features of this step are shown in Fig. 221.

23. Plasma back-etch the boron doped silicon layer to a depth of 1 micron using MEMS Mask 3. This mask defines the nozzle rim. The MEMS features of this step are shown in Fig. 222.

24. Plasma back-etch through the boron doped layer using MEMS Mask 4. This mask defines the nozzle, and the edge of the chips. At this stage, the chips are separate, but are still mounted on the glass blank. The MEMS features of this step are shown in Fig. 223.

25. Detach the chips from the glass blank. Strip the adhesive. This step is shown in Fig. 224.

26. Etch the sacrificial oxide using vapor phase etching (VPE) using an anhydrous HF/methanol vapor mixture. The use of a dry etch avoids problems with stiction. This step is shown in Fig. 225.

27. Mount the print heads in their packaging, which may be a molded plastic former incorporating ink channels which supply different colors of ink to the appropriate regions of the front surface of the wafer. The package also includes a piezoelectric actuator attached to the rear of the ink channels. The piezoelectric actuator provides the oscillating ink pressure required for the ink jet operation. The package also contains the permanent magnets which provide the 1 Tesla magnetic field for the Lorenz actuators formed of metal 1.

28. Connect the print heads to their interconnect systems.

29. Hydrophobize the front surface of the print heads.

30. Fill the completed print heads with ink and test them. A filled nozzle is shown in Fig. 226.

Description of IJ14 F

[0299] In an embodiment, there is provided an ink jet nozzle which incorporates a plunger that is surrounded by an electromagnetic device. The plunger is made from a magnetic material such that upon activation of the magnetic device, the plunger is forced towards a nozzle outlet port thereby resulting in the ejection of ink from the outlet port. Upon deactivation of the electromagnet, the plunger returns to its rest position via the utilisation of a series of springs constructed to return the electromagnet to its rest position.

[0300] Fig. 227 illustrates a sectional view through a single ink jet nozzle 1310 as constructed with an embodiment. The ink jet nozzle 1310 includes a nozzle chamber 1311 which is connected to a nozzle output port 1312 for the ejection of ink. The ink is ejected by means of a tapered plunger device 1314 which is made of a soft magnetic material such as nickel-ferrous material (NIFE). The plunger 1314 includes tapered end portions, e.g. 1316, in addition to interconnecting nitride springs, e.g. 1317.

[0301] An electromagnetic device is constructed around the plunger 1314 and includes outer soft magnetic material 1319 which surrounds a copper current carrying wire core 1320 with a first end of the copper coil 1320 connected to a first portion of a nickel- ferrous material and a second end of the copper coil is connected to a second portion of the nickel-ferrous material. The circuit being further formed by means of vias (not shown) connecting the current carrying wire to lower layers which can take the structure of standard CMOS fabrication layers.

[0302] Upon activation of the electromagnet, the tapered plunger portions 1316 attracted to the electromagnet. The tapering allows for the forces to be resolved by means of downward movement of the overall plunger 1314, the downward movement thereby causing the ejection of ink from ink ejection port 1312. In due course, the plunger will move to a stable state having a top surface substantially flush with the electromagnet. Upon turning the power off, the plunger 1314 will return to its original position as a result of energy stored within that nitride springs 1317. The nozzle chamber 1311 is refilled by inlet holes 1322 from the ink reservoir 1323.

[0303] Turning now to Fig. 228, there is illustrated an exploded perspective of the various layers utilized in construction of a single nozzle 1310. The bottom layer 1330 can be formed by back etching a silicon wafer which has a boron dope epitaxial layer as the etch stop. The boron dope layer 1330 can be further individually masked and etched so as to form nozzle rim 1331 and the nozzle ejection port 1312. Next, a silicon layer 1332 is formed. The silicon layer 1332 can be formed as part of the original wafer having the buried boron doped layer 1330. The nozzle chamber proper can be formed substantially from high density low pressure plasma etching of the silicon layer 1332 so as to produce substantially vertical side walls thereby forming the nozzle chamber. On top of the silicon layer 1332 is formed a glass layered 1333 which can include the drive and control circuitry required for driving an array of nozzles 1310. The drive and control circuitry can comprise standard two level metal CMOS circuitry intra-connected to form the copper coil circuit by means of vias though upper layers (not shown). Next, a nitride passivation layer 1334 is provided so as to passivate any lower glass layers, e.g. 1333, from sacrificial etches should a sacrificial etching be utilized in the formation of portions of the nozzle. On top of the nitride layer 1334 is formed a first nickel-ferrous layer 1336 followed by a copper layer 1337 and a further nickel-ferrous layer 1338 which can be formed via a dual damascene process. On top of the layer 1338 is formed the final nitride spring layer 1340 with the springs being formed by means of semiconductor treatment of the nitride layer 1340 so as to release the springs in tension so as to thereby cause a slight rating of the plunger 1314. A number of techniques not disclosed in Fig. 228 can be utilized in the construction of various portions of the arrangement 1310. For example, the nozzle chamber can be formed by utilizing the aforementioned plasma etch and then subsequently filling the nozzle chamber with sacrificial material such as glass so as to provide a support for the plunger 1314 with the plunger 1314 being subsequently released via sacrificial etching of the sacrificial layers.

[0304] Further, the tapered end portions of the nickel-ferrous material can be formed so that the utilisation of a half-tone mask having an intensity pattern corresponding to the desired bottom tapered profile of plunger 1314. The half-tone mask can be utilized to half-tone a resist so that the shape is transferred to the resist and subsequently to a lower layer, such as sacrificial glass on top of which is laid the nickel-ferrous material which can be finally planarised utilizing chemical mechanical planarization techniques.

[0305] One form of detailed manufacturing process which can be used to fabricate monolithic ink jet print heads operating in accordance with the principles taught by the present embodiment can proceed utilizing the following steps:

1. Using a double sided polished wafer deposit 3 microns of epitaxial silicon heavily doped with boron.
2. Deposit 10 microns of epitaxial silicon, either p-type or n-type, depending upon the CMOS process used.
3. Complete drive transistors, data distribution, and timing circuits using a 0.5 micron, one poly, 2 metal CMOS process. This step is shown in Fig. 230. For clarity, these diagrams may not be to scale, and may not represent a cross section though any single plane of the nozzle. Fig. 229 is a key to representations of various materials in these manufacturing diagrams, and those of other cross referenced ink jet configurations.
4. Etch the CMOS oxide layers down to silicon or aluminum using Mask 1. This mask defines the nozzle chamber and the edges of the print heads chips.
5. Plasma etch the silicon down to the boron doped buried layer, using oxide from step 4 as a mask. This etch does not substantially etch the aluminum. This step is shown in Fig. 231.
6. Deposit 0.5 microns of silicon nitride (Si_3N_4).
7. Deposit 12 microns of sacrificial material.
8. Planarize down to nitride using CMP. This fills the nozzle chamber level to the chip surface. This step is shown in Fig. 232.
9. Etch nitride and CMOS oxide layers down to second level metal using Mask 2. This mask defines the vias for

the contacts from the second level metal electrodes to the two halves of the split fixed magnetic pole. This step is shown in Fig. 233.

10. Deposit a seed layer of cobalt nickel iron alloy. CoNiFe is chosen due to a high saturation flux density of 2 Tesla, and a low coercivity. [Osaka, Tetsuya et al, A soft magnetic CoNiFe film with high saturation magnetic flux density, Nature 392, 796-798 (1998)].

11. Spin on 5 microns of resist, expose with Mask 3, and develop. This mask defines the lowest layer of the split fixed magnetic pole, and the thinnest rim of the magnetic plunger. The resist acts as an electroplating mold. This step is shown in Fig. 234.

12. Electroplate 4 microns of CoNiFe. This step is shown in Fig. 235.

13. Deposit 0.1 microns of silicon nitride (Si_3N_4).

14. Etch the nitride layer using Mask 4. This mask defines the contact vias from each end of the solenoid coil to the two halves of the split fixed magnetic pole.

15. Deposit a seed layer of copper.

16. Spin on 5 microns of resist, expose with Mask 5, and develop. This mask defines the solenoid spiral coil and the spring posts, for which the resist acts as an electroplating mold. This step is shown in Fig. 236.

17. Electroplate 4 microns of copper. Copper is used for its low resistivity (which results in higher efficiency) and its high electromigration resistance, which increases reliability at high current densities.

18. Strip the resist and etch the exposed copper seed layer. This step is shown in Fig. 237.

19. Wafer probe. All electrical connections are complete at this point, bond pads are accessible, and the chips are not yet separated.

20. Deposit 0.1 microns of silicon nitride. This layer of nitride provides corrosion protection and electrical insulation to the copper coil.

21. Etch the nitride layer using Mask 6. This mask defines the regions of continuity between the lower and the middle layers of CoNiFe.

22. Spin on 4.5 microns of resist, expose with Mask 6, and develop. This mask defines the middle layer of the split fixed magnetic pole, and the middle rim of the magnetic plunger. The resist forms an electroplating mold for these parts. This step is shown in Fig. 238.

23. Electroplate 4 microns of CoNiFe. The lowest layer of CoNiFe acts as the seed layer. This step is shown in Fig. 239.

24. Deposit a seed layer of CoNiFe.

25. Spin on 4.5 microns of resist, expose with Mask 7, and develop. This mask defines the highest layer of the split fixed magnetic pole and the roof of the magnetic plunger. The resist forms an electroplating mold for these parts. This step is shown in Fig. 240.

26. Electroplate 4 microns of CoNiFe. This step is shown in Fig. 241.

27. Deposit 1 micron of sacrificial material.

28. Etch the sacrificial material using Mask 8. This mask defines the contact points of the nitride springs to the split fixed magnetic poles and the magnetic plunger. This step is shown in Fig. 242.

29. Deposit 0.1 microns of low stress silicon nitride.

30. Deposit 0.1 microns of high stress silicon nitride. These two layers of nitride form a pre-stressed spring which lifts the magnetic plunger out of core space of the fixed magnetic pole.

31. Etch the two layers of nitride using Mask 9. This mask defines the nitride spring. This step is shown in Fig. 243.

32. Mount the wafer on a glass blank and back-etch the wafer using KOH with no mask. This etch thins the wafer and stops at the buried boron doped silicon layer. This step is shown in Fig. 244.

33. Plasma back-etch the boron doped silicon layer to a depth of (approx.) 1 micron using Mask 10. This mask defines the nozzle rim. This step is shown in Fig. 245.

34. Plasma back-etch through the boron doped layer using Mask 11. This mask defines the nozzle, and the edge of the chips. At this stage, the chips are separate, but are still mounted on the glass blank. This step is shown in Fig. 246.

35. Detach the chips from the glass blank. Strip all adhesive, resist, sacrificial, and exposed seed layers. The nitride spring is released in this step, lifting the magnetic plunger out of the fixed magnetic pole by 3 microns. This step is shown in Fig. 247.

36. Mount the print heads in their packaging, which may be a molded plastic former incorporating ink channels which supply different colors of ink to the appropriate regions of the front surface of the wafer.

37. Connect the print heads to their interconnect systems.

38. Hydrophobize the front surface of the print heads.

39. Fill the completed print heads with ink and test them. A filled nozzle is shown in Fig. 248.

Description of IJ15 S

[0306] In the present invention, a magnetically actuated ink jet print nozzle is provided for the ejection of ink from an ink chamber. The magnetically actuated ink jet utilizes a linear spring to increase the travel of a shutter grill which blocks any ink pressure variations in a nozzle when in a closed position. However when the shutter is open, pressure variations are directly transmitted to the nozzle chamber and can result in the ejection of ink from the chamber. An oscillating ink pressure within an ink reservoir is used therefore to inject ink from nozzles having an open shutter grill.

[0307] In Fig. 249, there is illustrated a single nozzle mechanism 1410 of an embodiment when in a closed or rest position. The arrangement 1410 includes a shutter mechanism 1411 having shutters 1412, 1413 which are interconnected together 1415 at one end for providing structural stability. The two shutters 1412, 1413 are interconnected at another end to a moveable bar 1416 which is further connected to a stationary positioned bar 1418 via leaf springs 1420, 1421. The bar 1416 can be made of a soft magnetic (NiFe) material.

[0308] An electromagnetic actuator is utilized to attract the bar 1416 generally in the direction 1425. The electromagnetic actuator consists of a series of soft iron claws 1424 around which is formed a copper coil wire 1426. The electromagnetic actuators can comprise a series of actuators 1428-1430 interconnected via the copper coil windings. Hence, when it is desired to open the shutters 1412-1413 the coil 1426 is activated resulting in an attraction 1425 of bar 1416 towards the electromagnets 1428-1430. The attraction 1425 results in a corresponding interaction with linear springs 1420, 1421 and a movement of shutters 1412, 1413 to an open position as illustrated in Fig. 250, the result of the actuation being to open portals 1432, 1433 into an ink ejection chamber 1434 thereby allowing the ejection of ink through an ink ejection nozzle 1436.

[0309] The linear springs 1420, 1421 are designed to increase the movement of the shutter as a result of actuation by a factor of eight. A one micron motion of the bar towards the electromagnets will result in an eight micron sideways movement This dramatically improves the efficiency of the system, as any magnetic field falls off strongly with distance, while the linear springs have a linear relationship between motion in one axis and the other. The use of the linear springs 1420, 1421 therefore allows the relatively large motion required to be easily achieved.

[0310] The surface of the wafer is directly immersed in an ink reservoir or in relatively large ink channels. An ultrasonic transducer (for example, a piezoelectric transducer), not shown, is positioned in the reservoir. The transducer oscillates the ink pressure at approximately 100 kHz. The ink pressure oscillation is sufficient that ink drops would be ejected from the nozzle were it not blocked by the shutters 1412, 1413. When data signals distributed on the print head indicate that a particular nozzle is to eject a drop of ink, the drive transistor for that nozzle is turned on. This energizes the actuators 1428-1430, which moves the shutter so that it is not blocking the ink chamber. The peak of the ink pressure variation causes the ink to be squirted out of the nozzle. As the ink pressure goes negative, ink is drawn back into the nozzle, causing drop break-off. The shutter 1412, 1413 is kept open until the nozzle is refilled on the next positive pressure cycle. It is then shut to prevent the ink from being withdrawn from the nozzle on the next negative pressure cycle.

[0311] Each drop ejection takes two ink pressure cycles. Preferably half of the nozzles should eject drops in one phase, and the other half of the nozzle should eject drops in the other phase. This minimizes the pressure variations which occur due to a large number of nozzles being actuated.

[0312] The amplitude of the ultrasonic transducer can be further altered in response to the viscosity of the ink (which is typically affected by temperature), and the number of drops which are to be ejected in a current cycle. This amplitude adjustment can be used to maintain consistent drop size in varying environmental conditions.

[0313] In Fig. 251, there is illustrated a section taken through the line II of Fig. 250 so as to illustrate the nozzle chamber 1434 which can be formed utilizing an anisotropic crystallographic etch of the silicon substrate. The etch access through the substrate can be via the slots 1432,1422 (Fig. 250) in the shutter grill.

[0314] The device is manufactured on <100> silicon with a buried boron etch stop layer 1440, but rotated 45° in relation to the <010> and <001> planes. Therefore, the <111> planes which stop the crystallographic etch of the nozzle chamber form a 45° rectangle which superscribes the slots in the fixed grill. This etch will proceed quite slowly, due to limited access of etchant to the silicon. However, the etch can be performed at the same time as the bulk silicon etch which thins the bottom of the wafer.

[0315] In Fig. 252, there is illustrated an exploded perspective of the various layers formed in the construction of an ink jet print head 1410. The layers include the boron doped layer 1440 which acts as an etched stop and can be derived from back etching a silicon wafer having a buried epitaxial layer as is well known in Micro Electro Mechanical Systems (MEMS). For a general introduction to a micro-electro mechanical system (MEMS) reference is made to standard proceedings in this field including the proceedings of the SPIE (International Society for Optical Engineering), volumes 2642 and 2882 which contain the proceedings for recent advances and conferences in this field. The nozzle chambers side walls are formed from a crystallographic graphic etch of the wafer 1441 with the boron doped layer 1440 being utilized as an etch stop.

[0316] A subsequent layer 1442 is constructed for the provision of drive transistors and printer logic and can comprise

a two level metal CMOS processing layer 1442. The CMOS processing layer is covered by a nitride layer 1443 which includes portions 1444 which cover and protect the side walls of the CMOS layer 1442. The copper layer 1445 can be constructed utilizing a dual damascene process. Finally, a soft metal (NiFe) layer 1446 is provided for forming the rest of the actuator. Each of the layers 1444, 1445 are separately coated by a nitride insulating layer (not shown) which provides passivation and insulation and can be a standard 0.1 μm process.

[0317] The arrangement of Fig. 249 therefore provides an ink jet nozzle having a high speed firing rate (approximately 50 kHz) which is suitable for fabrication in arrays of ink jet nozzles, one along side another, for fabrication as a monolithic page width print head.

[0318] One form of detailed manufacturing process which can be used to fabricate monolithic ink jet print heads operating in accordance with the principles taught by the present embodiment can proceed utilizing the following steps:

1. Using a double sided polished wafer deposit 3 microns of epitaxial silicon heavily doped with boron.
2. Deposit 10 microns of epitaxial silicon, either p-type or n-type, depending upon the CMOS process used.
3. Complete drive transistors, data distribution, and timing circuits using a 0.5 micron, one poly, 2 metal CMOS process. Relevant features of the wafer at this step are shown in Fig. 254. For clarity, these diagrams may not be to scale, and may not represent a cross section though any single plane of the nozzle. Fig. 253 is a key to representations of various materials in these manufacturing diagrams, and those of other cross referenced ink jet configurations.
4. Etch the CMOS oxide layers down to silicon or aluminum using Mask 1. This mask defines the nozzle chamber, and the edges of the print head chips. This step is shown in Fig. 255.
5. Crystallographically etch the exposed silicon using, for example, KOH or EDP (ethylenediamine pyrocatechol). This etch stops on <111> crystallographic planes, and on the boron doped silicon buried layer. This step is shown in Fig. 256.
6. Deposit 12 microns of sacrificial material. Planarize down to oxide using CMP. The sacrificial material temporarily fills the nozzle cavity. This step is shown in Fig. 257.
7. Deposit 0.5 microns of silicon nitride (Si_3N_4).
8. Etch nitride and oxide down to aluminum or sacrificial material using Mask 3. This mask defines the contact vias from the aluminum electrodes to the solenoid, as well as the fixed grill over the nozzle cavity. This step is shown in Fig. 258.
9. Deposit a seed layer of copper. Copper is used for its low resistivity (which results in higher efficiency) and its high electromigration resistance, which increases reliability at high current densities.
10. Spin on 2 microns of resist, expose with Mask 4, and develop. This mask defines the lower side of the solenoid square helix. The resist acts as an electroplating mold. This step is shown in Fig. 259.
11. Electroplate 1 micron of copper. This step is shown in Fig. 260.
12. Strip the resist and etch the exposed copper seed layer. This step is shown in Fig. 261.
13. Deposit 0.1 microns of silicon nitride.
14. Deposit 0.5 microns of sacrificial material.
15. Etch the sacrificial material down to nitride using Mask 5. This mask defines the solenoid, the fixed magnetic pole, and the linear spring anchor. This step is shown in Fig. 262.
16. Deposit a seed layer of cobalt nickel iron alloy. CoNiFe is chosen due to a high saturation flux density of 2 Tesla, and a low coercivity. [Osaka, Tetsuya et al, A soft magnetic CoNiFe film with high saturation magnetic flux density, Nature 392, 796-798 (1998)].
17. Spin on 3 microns of resist, expose with Mask 6, and develop. This mask defines all of the soft magnetic parts, being the U shaped fixed magnetic poles, the linear spring, the linear spring anchor, and the shutter grill. The resist acts as an electroplating mold. This step is shown in Fig. 263.
18. Electroplate 2 microns of CoNiFe. This step is shown in Fig. 264.
19. Strip the resist and etch the exposed seed layer. This step is shown in Fig. 265.
20. Deposit 0.1 microns of silicon nitride (Si_3N_4).
21. Spin on 2 microns of resist, expose with Mask 7, and develop. This mask defines the solenoid vertical wire segments, for which the resist acts as an electroplating mold. This step is shown in Fig. 266.
22. Etch the nitride down to copper using the Mask 7 resist.
23. Electroplate 2 microns of copper. This step is shown in Fig. 267.
24. Deposit a seed layer of copper.
25. Spin on 2 microns of resist, expose with Mask 8, and develop. This mask defines the upper side of the solenoid square helix. The resist acts as an electroplating mold. This step is shown in Fig. 268.
26. Electroplate 1 micron of copper. This step is shown in Fig. 269.
27. Strip the resist and etch the exposed copper seed layer, and strip the newly exposed resist. This step is shown in Fig. 270.

28. Deposit 0.1 microns of conformal silicon nitride as a corrosion barrier.
29. Open the bond pads using Mask 9.
30. Wafer probe. All electrical connections are complete at this point, bond pads are accessible, and the chips are not yet separated.
31. Mount the wafer on a glass blank and back-etch the wafer using KOH with no mask. This etch thins the wafer and stops at the buried boron doped silicon layer. This step is shown in Fig. 271.
32. Plasma back-etch the boron doped silicon layer to a depth of 1 micron using Mask 9. This mask defines the nozzle rim. This step is shown in Fig. 272.
33. Plasma back-etch through the boron doped layer using Mask 10. This mask defines the nozzle, and the edge of the chips. At this stage, the chips are separate, but are still mounted on the glass blank. This step is shown in Fig. 273.
34. Detach the chips from the glass blank. Strip all adhesive, resist, sacrificial, and exposed seed layers. This step is shown in Fig. 274.
35. Mount the print heads in their packaging, which may be a molded plastic former incorporating ink channels which supply different colors of ink to the appropriate regions of the front surface of the wafer. The package also includes a piezoelectric actuator attached to the rear of the ink channels. The piezoelectric actuator provides the oscillating ink pressure required for the inkjet operation.
36. Connect the print heads to their interconnect systems.
37. Hydrophobize the front surface of the print heads.
38. Fill the completed print heads with ink and test them. A filled nozzle is shown in Fig. 275.

Description of IJ16 F

[0319] An embodiment utilizes a Lorenz force on a current carrying wire in a magnetic field to actuate a diaphragm for the injection of ink from a nozzle chamber via a nozzle hole. The magnetic field is static and is provided by a permanent magnetic yoke around the nozzles of an ink jet head.

[0320] Referring initially to Fig. 276, there is illustrated a single ink jet nozzle chamber apparatus 1510 as constructed in accordance with an embodiment. Each ink jet nozzle 1510 includes a diaphragm 1511 of a corrugated form which is suspended over a nozzle chamber having a ink port 1513 for the injection of ink. The diaphragm 1511 is constructed from a number of layers including a plane copper coil layer which consists of a large number of copper coils which form a circuit for the flow of electric current across the diaphragm 1511. The electric current in the wires of the diaphragm coil section 1511 all flowing in the same direction. Fig. 283 is a perspective view of the current circuit utilised in the construction of a single ink jet nozzle, illustrating the corrugated structure of the traces in the diaphragm 1511 of Fig. 276. A permanent magnetic yoke (not shown) is arranged so that the magnetic field , 1516, is in the plane of the chip's surface, perpendicular to the direction of current flow across the diaphragm coil 1511.

[0321] In Fig. 277, there is illustrated a sectional view of the ink jet nozzle 1510 taken along the line A-A1 of Fig. 276 when the diaphragm 1511 has been activated by current flowing through coil wires 1514. The diaphragm 1511 is forced generally in the direction of nozzle 1513 thereby resulting in ink within chamber 1518 being ejected out of port 1513. The diaphragm 1511 and chamber 1518 are connected to an ink reservoir 1519 which, after the ejection of ink via port 1513, results in a refilling of chamber 1518 from ink reservoir 1519.

[0322] The movement of the diaphragm 1511 results from a Lorenz interaction between the coil current and the magnetic field.

[0323] The diaphragm 1511 is corrugated so that the diaphragm motion occurs as an elastic bending motion. This is important as a flat diaphragm may be prevented from flexing by tensile stress.

[0324] When data signals distributed on the print head indicate that a particular nozzle is to eject a drop of ink, the drive transistor for that nozzle is turned on. This energises the coil 1514, causing elastic deformation of the diaphragm 1511 downwards, ejecting ink. After approximately 3 μs, the coil current is turned off, and the diaphragm 1511 returns to its quiescent position. The diaphragm return 'sucks' some of the ink back into the nozzle, causing the ink ligament connecting the ink drop 1520 to the ink in the nozzle to thin. The forward velocity of the drop and backward velocity of the ink in the chamber 1518 are resolved by the ink drop 1520 breaking off from the ink in the nozzle. The ink drop 1520 then continues towards the recording medium. Ink refill of the nozzle chamber 1518 is via the two slots 1522, 1523 at either side of the diaphragm. The ink refill is caused by the surface tension of the ink meniscus at the nozzle.

[0325] Turning to Fig. 278, the corrugated diaphragm can be formed by depositing a resist layer 1530 on top of a sacrificial glass layer 1531. The resist layer 1530 is exposed utilising a mask 1532 having a halftone pattern delineating the corrugations.

[0326] After development, as is illustrated in Fig. 279, the resist 1530 contains the corrugation pattern. The resist layer 1530 and the sacrificial glass layer are then etched utilizing an etchant that erodes the resist 1530 at substantially the same rate as the sacrificial glass 1531. This transfers the corrugated pattern into the sacrificial glass layer 1531

as illustrated in Fig. 280. As illustrated in Fig. 281, subsequently, a nitride passivation layer 1534 is deposited followed a copper layer 1535 which is patterned utilizing a coil mask. A further nitride passivation layer 1536 follows on top of the copper layer 1535. Slots 1522, 1523 in the nitride layer at the side of the diaphragm can be etched (Fig. 276) and subsequently, the sacrificial glass layer can be etched away leaving the corrugated diaphragm.

[0327] In Fig. 282, there is illustrated an exploded perspective view of the various layers of an ink jet nozzle 1510 which is constructed on a silicon wafer having a buried boron doped epitaxial layer 1540 which is back etched in a final processing step, including the etching of ink port 1513. The silicon substrate 1541, as will be discussed below, is an anisotropically crystallographically etched so as to form the nozzle chamber structure. On top of the silicon substrate layer 1541 is a CMOS layer 1542 which can comprise standard CMOS processing to form two level metal drive and control circuitry. On top of the CMOS layer 1542 is a first passivation layer which can comprise silicon nitride which protects the lower layers from any subsequent etching processes. On top of this layer is formed the copper layer 1545 having through holes eg. 1546 to the CMOS layer 1542 for the supply of current. On top of the copper layer 1545 is a second nitrate passivation layer 1547 which provides for protection of the copper layer from ink and provides insulation.

[0328] The nozzle 1510 can be formed as part of an array of nozzles formed on a single wafer. After construction, the wafer creating nozzles 1510 can be bonded to a second ink supply wafer having ink channels for the supply of ink such that the nozzle 1510 is effectively supplied with an ink reservoir on one side and ejects ink through the hole 1513 onto print media or the like on demand as required.

[0329] The nozzle chamber 1518 is formed using an anisotropic crystallographic etch of the silicon substrate. Etchant access to the substrate is via the slots 1522, 1523 at the sides of the diaphragm. The device is manufactured on <100> silicon (with a buried boron etch stop layer), but rotated 450 in relation to the <010> and <001> planes. Therefore, the <111> planes which stop the crystallographic etch of the nozzle chamber form a 45° rectangle which superscribes the slot in the nitride layer. This etch will proceed quite slowly, due to limited access of etchant to the silicon. However, the etch can be performed at the same time as the bulk silicon etch which thins the wafer. The drop firing rate is around 7 kHz. The ink jet head is suitable for fabrication as a monolithic page wide print head. The illustration shows a single nozzle of a 1600 dpi print head in 'down shooter' configuration.

[0330] One form of detailed manufacturing process which can be used to fabricate monolithic ink jet print heads operating in accordance with the principles taught by the present embodiment can proceed utilizing the following steps:

1. Using a double sided polished wafer deposit 3 microns of epitaxial silicon heavily doped with boron.
2. Deposit 10 microns of epitaxial silicon, either p-type or n-type, depending upon the CMOS process used.
3. Complete drive transistors, data distribution, and timing circuits using a 0.5 micron, one poly, 2 metal CMOS process. This step is shown in Fig. 285. For clarity, these diagrams may not be to scale, and may not represent a cross section though any single plane of the nozzle. Fig. 284 is a key to representations of various materials in these manufacturing diagrams, and those of other cross referenced ink jet configurations.
4. Etch the CMOS oxide layers down to silicon or aluminum using Mask 1. This mask defines the nozzle chamber, and the edges of the print heads chips. This step is shown in Fig. 286.
5. Crystallographically etch the exposed silicon using, for example, KOH or EDP (ethylenediamine pyrocatechol). This etch stops on <111> crystallographic planes, and on the boron doped silicon buried layer. This step is shown in Fig. 287.
6. Deposit 12 microns of sacrificial material (polyimide). Planarize down to oxide using CMP. The sacrificial material temporarily fills the nozzle cavity. This step is shown in Fig. 288.
7. Deposit 1 micron of (sacrificial) photosensitive polyimide.
8. Expose and develop the photosensitive polyimide using Mask 2. This mask is a gray-scale mask which defines the concertina ridges of the flexible membrane containing the central part of the solenoid. The result of the etch is a series of triangular ridges across the whole length of the ink pushing membrane. This step is shown in Fig. 289.
9. Deposit 0.1 microns of PECVD silicon nitride (Si_3N_4).
10. Etch the nitride layer using Mask 3. This mask defines the contact vias from the solenoid coil to the second-level metal contacts.
11. Deposit a seed layer of copper.
12. Spin on 2 microns of resist, expose with Mask 4, and develop. This mask defines the coil of the solenoid. The resist acts as an electroplating mold. This step is shown in Fig. 290.
13. Electroplate 1 micron of copper. Copper is used for its low resistivity (which results in higher efficiency) and its high electromigration resistance, which increases reliability at high current densities.
14. Strip the resist and etch the exposed copper seed layer. This step is shown in Fig. 291.
15. Deposit 0.1 microns of silicon nitride (Si_3N_4).
16. Etch the nitride layer using Mask 5. This mask defines the edges of the ink pushing membrane and the bond pads.
17. Wafer probe. All electrical connections are complete at this point, bond pads are accessible, and the chips are

not yet separated.

18. Mount the wafer on a glass blank and back-etch the wafer using KOH with no mask. This etch thins the wafer and stops at the buried boron doped silicon layer. This step is shown in Fig. 292.

19. Plasma back-etch the boron doped silicon layer to a depth of 1 micron using Mask 6. This mask defines the nozzle rim. This step is shown in Fig. 293.

20. Plasma back-etch through the boron doped layer using Mask 7. This mask defines the nozzle, and the edge of the chips. At this stage, the chips are still mounted on the glass blank. This step is shown in Fig. 294.

21. Strip the adhesive layer to detach the chips from the glass blank. Etch the sacrificial layer. This process completely separates the chips. This step is shown in Fig. 295.

22. Mount the print heads in their packaging, which may be a molded plastic former incorporating ink channels which supply different colors of ink to the appropriate regions of the front surface of the wafer.

23. Connect the print heads to their interconnect systems.

24. Hydrophobize the front surface of the print heads.

25. Fill with ink, apply a strong magnetic field in the plane of the chip surface, and test the completed print heads. A filled nozzle is shown in Fig. 296.

Description of IJ25 F

[0331] In an embodiment, there is provided a nozzle chamber having an ink ejection port and a magnetostrictive actuator surrounded by an electrical coil such that, upon activation of the coil, a magnetic field is produced which effects the actuator to the extent that it causes the ejection of ink from the nozzle chamber.

[0332] Turning now to Fig. 297, there is illustrated a perspective cross-sectional view, of a single ink jet nozzle arrangement 2410. The nozzle arrangement includes a nozzle chamber 2411 which opens to a nozzle ejection port 2412 for the ejection of ink.

[0333] The nozzle 2410 can be formed on a large silicon wafer with multiple print heads being formed from nozzle groups at the same time. The nozzle port 2412 can be formed from back etching the silicon wafer to the level of a boron doped epitaxial layer 2413 which is subsequently etched utilizing an appropriate mask to form the nozzle portal 2412 including a rim 2415. The nozzle chamber 2411 is further formed from a crystallographic etch of the remaining portions of the silicon wafer 2416, the crystallographic etching process being well known in the field of micro-electro-mechanical systems (MEMS). For a general introduction to a micro-electro mechanical system (MEMS) reference is made to standard proceedings in this field including the proceedings of the SPIE (International Society for Optical Engineering), volumes 2642 and 2882 which contain the proceedings for recent advances and conferences in this field.

[0334] Turning now to Fig. 298 there is illustrated an exploded perspective view illustrating the construction of a single ink jet nozzle arrangement 2410 in accordance with an embodiment.

[0335] On top of the silicon wafer 2416 there is previously constructed a two level metal CMOS layer 2417 which includes an aluminum layer (not shown). The CMOS layer 2417 is constructed to provide data and control circuitry for the ink jet nozzle 2410. On top of the CMOS layer 2417 is constructed a nitride passivation layer 2420 which includes nitride paddle portion 2421. The nitride layer 2421 can be constructed by a utilizing a sacrificial material such as glass to first fill the crystallographic etched nozzle chamber 2411 then depositing the nitride layer 2420, 2421 before etching the sacrificial layer away to release the nitride layer 2421. On top of the nitride layer 2421 is formed a Terfenol-D layer 2422. Terfenol-D is a material having high magnetostrictive properties (for further information on the properties of Terfenol-D, reference is made to "magnetostriction, theory and applications of magnetoelasticity" by Etienne du Trémolett de Lachiesserie published 1993 by CRC Press). Upon it being subject to a magnetic field, the Terfenol-D substance expands. The Terfenol-D layer 2422 is attached to a lower nitride layer 2421 which does not undergo expansion. As a result the forces are resolved by a bending of the nitride layer 2421 towards the nozzle ejection hole 2412 thereby causing the ejection of ink from the ink ejection portal 2412.

[0336] The Terfenol-D layer 2422 is passivated by a top nitride layer 2423 on top of which is a copper coil layer 2424 which is interconnected to the lower CMOS layer 2417 via a series of vias so that copper coil layer 2424 can be activated upon demand. The activation of the copper coil layer 2424 induces a magnetic field 2425 across the Terfenol-D layer 2422 thereby causing the Terfenol-D layer 2422 to undergo phase change on demand. Therefore, in order to eject ink from the nozzle chamber 2411, the Terfenol-D layer 2422 is activated to undergo phase change causing the bending of the actuator 2426 (Fig. 297) in the direction of the ink ejection port 2412 thereby causing the ejection of ink drops. Upon deactivation of the upper coil layer 2424 the actuator 2426 (Fig. 297) returns to its quiescent position causing some of the ink back into the nozzle chamber causing the ink ligament connecting the ink drop to the ink in the nozzle chamber to thin. The forward velocity of the drop and backward velocity of the ink in the nozzle chamber 2411 are resolved by the ink drop breaking off from the ink in the nozzle chamber 2411. Ink refill of the nozzle chamber 2411 is via the sides of actuator 2426 (Fig. 297) as a result of the surface tension of the ink meniscus at the ejection port 2412.

[0337] The copper layer 2424 is passivated by a nitride layer (not shown) and the nozzle arrangement 2410 abuts

an ink supply reservoir 2428 (Fig. 297).

[0338] One form of detailed manufacturing process which can be used to fabricate monolithic ink jet print heads operating in accordance with the principles taught by the present embodiment can proceed utilizing the following steps:

1. Using a double sided polished wafer deposit 3 microns of epitaxial silicon heavily doped with boron.
2. Deposit 20 microns of epitaxial silicon, either p-type or n-type, depending upon the CMOS process used.
3. Complete drive transistors, data distribution, and timing circuits using a 0.5 micron, one poly, 2 metal CMOS process. The metal layers are copper instead of aluminum, due to high current densities and subsequent high temperature processing. Relevant features of the wafer at this step are shown in Fig. 300. For clarity, these diagrams may not be to scale, and may not represent a cross section though any single plane of the nozzle. Fig. 299 is a key to representations of various materials in these manufacturing diagrams, and those of other cross referenced ink jet configurations.
4. Etch the CMOS oxide layers down to silicon using Mask 1. This mask defines the nozzle chamber. This step is shown in Fig. 301.
5. Deposit 1 micron of low stress PECVD silicon nitride (Si_3N_4).
6. Deposit a seed layer of Terfenol-D.
7. Deposit 3 microns of resist and expose using Mask 2. This mask defines the actuator beams. The resist forms a mold for electroplating of the Terfenol-D. This step is shown in Fig. 302.
8. Electroplate 2 microns of Terfenol-D.
9. Strip the resist and etch the seed layer. This step is shown in Fig. 303.
10. Etch the nitride layer using Mask 3. This mask defines the actuator beams and the nozzle chamber, as well as the contact vias from the solenoid coil to the second-level metal contacts. This step is shown in Fig. 304.
11. Deposit a seed layer of copper.
12. Deposit 22 microns of resist and expose using Mask 4. This mask defines the solenoid, and should be exposed using an x-ray proximity mask, as the aspect ratio is very large. The resist forms a mold for electroplating of the copper. This step is shown in Fig. 305.
13. Electroplate 20 microns of copper.
14. Strip the resist and etch the copper seed layer. Steps 10 to 13 form a LIGA process. This step is shown in Fig. 306.
15. Crystallographically etch the exposed silicon using, for example, KOH or EDP (ethylenediamine pyrocatechol). This etch stops on <111> crystallographic planes, and on the boron doped silicon buried layer. This step is shown in Fig. 307.
16. Deposit 0.1 microns of ECR diamond like carbon (DLC) as a corrosion barrier (not shown).
17. Open the bond pads using Mask 5.
18. Wafer probe. All electrical connections are complete at this point, bond pads are accessible, and the chips are not yet separated.
19. Mount the wafer on a glass blank and back-etch the wafer using KOH with no mask. This etch thins the wafer and stops at the buried boron doped silicon layer. This step is shown in Fig. 308.
20. Plasma back-etch the boron doped silicon layer to a depth of 1 micron using Mask 6. This mask defines the nozzle rim. This step is shown in Fig. 309.
21. Plasma back-etch through the boron doped layer using Mask 6. This mask defines the nozzle, and the edge of the chips. Etch the thin ECR DLC layer through the nozzle hole. This step is shown in Fig. 310.
22. Strip the adhesive layer to detach the chips from the glass blank.
23. Mount the print heads in their packaging, which may be a molded plastic former incorporating ink channels which supply different colors of ink to the appropriate regions of the front surface of the wafer.
24. Connect the print heads to their interconnect systems.
25. Hydrophobize the front surface of the print heads.
26. Fill the completed print heads with ink and test them. A filled nozzle is shown in Fig. 311.

Description of IJ26 F

[0339] In an embodiment, shape memory materials are utilized to construct an actuator suitable for injecting ink from the nozzle of an ink chamber.

[0340] Turning to Fig. 312, there is illustrated an exploded perspective view 2510 of a single ink jet nozzle as constructed in accordance with an embodiment The ink jet nozzle 2510 is constructed from a silicon wafer base utilizing back etching of the wafer to a boron doped epitaxial layer. Hence, the ink jet nozzle 2510 comprises a lower layer 2511 which is constructed from boron doped silicon. The boron doped silicon layer is also utilized a crystallographic etch stop layer. The next layer comprises the silicon layer 2512 that includes a crystallographic pit 2513 having side walls

etch at the usual angle of 54.74. The layer 2512 also includes the various required circuitry and transistors for example, CMOS layer (not shown). After this, a 0.5 micron thick thermal silicon oxide layer 2515 is grown on top of the silicon wafer 2512.

[0341] After this, comes various layers which can comprise a two level metal CMOS process layers which provide the metal interconnect for the CMOS transistors formed within the layer 2512. The various metal pathways etc. are not shown in Fig. 312 but for two metal interconnects 2518, 2519 which provide interconnection between a shape memory alloy layer 2520 and the CMOS metal layers 2516. The shape memory metal layer is next and is shaped in the form of a serpentine coil to be heated by end interconnect/via portions 2521,2523. A top nitride layer 2522 is provided for overall passivation and protection of lower layers in addition to providing a means of inducing tensile stress to curl upwards the shape memory alloy layer 2520 in its quiescent state.

[0342] An embodiment relies upon the thermal transition of a shape memory alloy 2520 (SMA) from its martensitic phase to its austenitic phase. The basis of a shape memory effect is a martensitic transformation which creates a polydemane phase upon cooling. This polydemane phase accommodates finite reversible mechanical deformations without significant changes in the mechanical self energy of the system. Hence, upon re-transformation to the austenitic state the system returns to its former macroscopic state to displaying the well known mechanical memory. The thermal transition is achieved by passing an electrical current through the SMA. The actuator layer 2520 is suspended at the entrance to a nozzle chamber 2513 connected via leads 2518, 2519 to the lower layers.

[0343] In Fig. 313, there is shown a cross-section of a single nozzle 2510 when in its quiescent state, the section basically being taken through the line A-A of Fig. 312. The actuator 2530 is bent away from the nozzle when in its quiescent state. In Fig. 314, there is shown a corresponding cross-section for a single nozzle 2510 when in an actuated state. When energized, the actuator 2530 straightens, with the corresponding result that the ink is pushed out of the nozzle. The process of energizing the actuator 2530 requires supplying enough energy to raise the SMA above its transition temperature, and to provide the latent heat of transformation to the SMA 2520.

[0344] Obviously, the SMA martensitic phase must be pre-stressed to achieve a different shape from the austenitic phase. For print heads with many thousands of nozzles, it is important to achieve this pro-stressing in a bulk manner. This is achieved by depositing the layer of silicon nitride 2522 using Plasma Enhanced Chemical Vapor Deposition (PECVD) at around 300°C over the SMA layer. The deposition occurs while the SMA is in the austenitic shape. After the print head cools to room temperature the substrate under the SMA bend actuator is removed by chemical etching of a sacrificial substance. The silicon nitride layer 2522 is under tensile stress, and causes the actuator to curl upwards. The weak martensitic phase of the SMA provides little resistance to this curl. When the SMA is heated to its austenitic phase, it returns to the flat shape into which it was annealed during the nitride deposition. The transformation being rapid enough to result in the ejection of ink from the nozzle chamber.

[0345] There is one SMA bend actuator 2530 for each nozzle. One end 2531 of the SMA bend actuator is mechanically connected to the substrate. The other end is free to move under the stresses inherent in the layers.

[0346] Returning to Fig. 312 the actuator layer is therefore composed of three layers:

1. An SiO_2 lower layer 2515. This layer acts as a stress 'reference' for the nitride tensile layer. It also protects the SMA from the crystallographic silicon etch that forms the nozzle chamber. This layer can be formed as part of the standard CMOS process for the active electronics of the print head.
2. A SMA heater layer 2520. A SMA such as nickel titanium (NiTi) alloy is deposited and etched into a serpentine form to increase the electrical resistance.
3. A silicon nitride top layer 2522. This is a thin layer of high stiffness which is deposited using PECVD. The nitride stoichiometry is adjusted to achieve a layer with significant tensile stress at room temperature relative to the SiO_2 lower layer. Its purpose is to bend the actuator at the low temperature martensitic phase.

[0347] As noted previously the inkjet nozzle of Fig. 312 can be constructed by utilizing a silicon wafer having a buried boron epitaxial layer. The 0.5 micron thick dioxide layer 2515 is then formed having side slots 2545 which are utilized in a subsequent crystallographic etch. Next, the various CMOS layers 2516 are formed including drive and control circuitry (not shown). The SMA layer 2520 is then created on top of layers 2515/2516 and being interconnected with the drive circuitry. Subsequently, a silicon nitride layer 2522 is formed on top. Each of the layers 2515, 2516, 2522 include the various slots eg. 2545 which are utilized in a subsequent crystallographic etch. The silicon wafer is subsequently thinned by means of back etching with the etch stop being the boron layer 2511. Subsequent boron etching forms the nozzle hole eg. 2547 and rim 2546 (Fig. 314). Subsequently, the chamber proper is formed by means of a crystallographic etch with the slots 2545 defining the extent of the etch within the silicon oxide layer 2512.

[0348] A large array of nozzles can be formed on the same wafer which in turn is attached to an ink chamber for filling the nozzle chambers.

[0349] One form of detailed manufacturing process which can be used to fabricate monolithic ink jet print heads operating in accordance with the principles taught by the present embodiment can proceed utilizing the following steps:

1. Using a double sided polished wafer deposit 3 microns of epitaxial silicon heavily doped with boron.
2. Deposit 10 microns of epitaxial silicon, either p-type or n-type, depending upon the CMOS process used.
3. Complete drive transistors, data distribution, and timing circuits using a 0.5 micron, one poly, 2 metal CMOS process. This step is shown in Fig. 316. For clarity, these diagrams may not be to scale, and may not represent a cross section though any single plane of the nozzle. Fig. 315 is a key to representations of various materials in these manufacturing diagrams, and those of other cross referenced ink jet configurations.
4. Etch the CMOS oxide layers down to silicon or aluminum using Mask 1. This mask defines the nozzle chamber, and the edges of the print heads chips. This step is shown in Fig. 317.
5. Crystallographically etch the exposed silicon using, for example, KOH or EDP (ethylenediamine pyrocatechol). This etch stops on <111> crystallographic planes, and on the boron doped silicon buried layer. This step is shown in Fig. 318.
6. Deposit 12 microns of sacrificial material. Planarize down to oxide using CMP. The sacrificial material temporarily fills the nozzle cavity. This step is shown in Fig. 319.
7. Deposit 0.1 microns of high stress silicon nitride (Si_3N_4).
8. Etch the nitride layer using Mask 2. This mask defines the contact vias from the shape memory heater to the second-level metal contacts.
9. Deposit a seed layer.
10. Spin on 2 microns of resist, expose with Mask 3, and develop. This mask defines the shape memory wire embedded in the paddle. The resist acts as an electroplating mold. This step is shown in Fig. 320.
11. Electroplate 1 micron of Nitinol. Nitinol is a'shape memory' alloy of nickel and titanium, developed at the Naval Ordnance Laboratory in the US (hence Ni-Ti-NOL). A shape memory alloy can be thermally switched between its weak martensitic state and its high stiffness austenic state.
12. Strip the resist and etch the exposed seed layer. This step is shown in Fig. 321.
13. Wafer probe. All electrical connections are complete at this point, bond pads are accessible, and the chips are not yet separated.
14. Deposit 0.1 microns of high stress silicon nitride. High stress nitride is used so that once the sacrificial material is etched, and the paddle is released, the stress in the nitride layer will bend the relatively weak martensitic phase of the shape memory alloy. As the shape memory alloy - in its austenic phase - is flat when it is annealed by the relatively high temperature deposition of this silicon nitride layer, it will return to this flat state when electrothermally heated.
15. Mount the wafer on a glass blank and back-etch the wafer using KOH with no mask. This etch thins the wafer and stops at the buried boron doped silicon layer. This step is shown in Fig. 322.
16. Plasma back-etch the boron doped silicon layer to a depth of 1 micron using Mask 4. This mask defines the nozzle rim. This step is shown in Fig. 323.
17. Plasma back-etch through the boron doped layer using Mask 5. This mask defines the nozzle, and the edge of the chips. At this stage, the chips are still mounted on the glass blank. This step is shown in Fig. 324.
18. Strip the adhesive layer to detach the chips from the glass blank. Etch the sacrificial layer. This process completely separates the chips. This step is shown in Fig. 325.
19. Mount the print heads in their packaging, which may be a molded plastic former incorporating ink channels which supply different colors of ink to the appropriate regions of the front surface of the wafer.
20. Connect the print heads to their interconnect systems.
21. Hydrophobize the front surface of the print heads.
22. Fill with ink and test the completed print heads. A filled nozzle is shown in Fig. 326.

Description of IJ45 F

[0350] In an embodiment, an ink jet print head is constructed from a series of nozzle arrangements where each nozzle arrangement includes a magnetic plate actuator which is actuated by a coil which is pulsed so as to move the magnetic plate and thereby cause the ejection of ink. The movement of the magnetic plate results in a leaf spring device being extended resiliently such that when the coil is deactivated, the magnetic plate returns to a rest position resulting in the ejection of a drop of ink from an aperture created within the plate.

[0351] Turning now to Fig. 327 to Fig. 329, there will now be explained the operation of this embodiment.

[0352] Turning to Fig. 327, there is illustrated an ink jet nozzle arrangement 4401 which includes a nozzle chamber 4402 which connects with an ink ejection nozzle 4403 such that, when in a quiescent position, an ink meniscus 4404 forms over the nozzle 4403. The nozzle 4403 is formed in a magnetic nozzle plate 4405 which can be constructed from a ferrous material. Attached to the nozzle plate 4405 is a series of leaf springs e.g. 4406, 4407 which bias the nozzle plate 4405 away from a base plate 4409. Between the nozzle plate 4405 and the base plate 4409, there is provided a conductive coil 4410 which is interconnected and controlled via a lower circuitry layer 4411 which can

comprise a standard CMOS circuitry layer. The ink chamber 4402 is supplied with ink from a lower ink supply channel 4412 which is formed by etching through a wafer substrate 4413. The wafer substrate 4413 can comprise a semiconductor wafer substrate. The ink chamber 4402 is interconnected to the ink supply channel 4412 by means of a series of slots 4414 which can be etched through the CMOS layer 4411.

[0353] The area around the coil 4410 is hydrophobically treated so that, during operation, a small meniscus e.g. 4416, 4417 forms between the nozzle plate 4405 and base plate 4409.

[0354] When it is desired to eject a drop of ink, the coil 4410 is energised. This results in a movement of the plate 4405 as illustrated in Fig. 328. The general downward movement of the plate 4405 results in a substantial increase in pressure within nozzle chamber 4402. The increase in pressure results in a rapid growth in the meniscus 4404 as ink flows out of the nozzle chamber 4403. The movement of the plate 4405 also results in the springs 4406, 4407 undergoing a general resilient extension. The small width of the slot 4414 results in minimal outflows of ink into the nozzle chamber 4412.

[0355] Moments later, as illustrated in Fig. 329, the coil 4410 is deactivated resulting in a return of the plate 4405 towards its quiescent position as a result of the springs 4406, 4407 acting on the nozzle plate 4405. The return of the nozzle plate 4405 to its quiescent position results in a rapid decrease in pressure within the nozzle chamber 4402 which in turn results in a general back flow of ink around the ejection nozzle 4403. The forward momentum of the ink outside the nozzle plate 4403 and the back suction of the ink around the ejection nozzle 4403 results in a drop 4419 being formed and breaking off so as to continue to the print media.

[0356] The surface tension characteristics across the nozzle 4403 result in a general inflow of ink from the ink supply channel 4412 until such time as the quiescent position of Fig. 327 is again reached. In this manner, a coil actuated magnetic ink jet print head is formed for the adoption of ink drops on demand. Importantly, the area around the coil 4410 is hydrophobically treated so as to expel any ink from flowing into this area.

[0357] Turning now to Fig. 330, there is illustrated a side perspective view, partly in section of a single nozzle arrangement constructed in accordance with the principles as previously outlined with respect to Fig. 327 to Fig. 329. The arrangement 4401 includes a nozzle plate 4405 which is formed around an ink supply chamber 4402 and includes an ink ejection nozzle 4403. A series of leaf spring elements 4406-4408 are also provided which can be formed from the same material as the nozzle plate 4405. A base plate 4409 also is provided for encompassing the coil 4410. The wafer 4413 includes a series of slots 4414 for the wicking and flowing of ink into nozzle chamber 4402 with the nozzle chamber 4402 being interconnected via the slots with an ink supply channel 4412. The slots 4414 are of a thin elongated form so as to provide for fluidic resistance to a rapid outflow of fluid from the chamber 4402.

[0358] The coil 4410 is conductive interconnected at a predetermined portion (not shown) with a lower CMOS layer for the control and driving of the coil 4410 and movement of base plate 4405. Alternatively, the plate 4409 can be broken into two separate semi- circular plates and the coil 4410 can have separate ends connected through one of the semi circular plates through to a lower CMOS layer.

[0359] Obviously, an array of ink jet nozzle devices can be formed at a time on a single silicon wafer so as to form multiple printheads.

[0360] One form of detailed manufacturing process which can be used to fabricate monolithic ink jet print heads operating in accordance with the principles taught by the present embodiment can proceed utilizing the following steps:

1. Using a double sided polished wafer, complete a 0.5 micron, one poly, 2 metal CMOS process. Due to high current densities, both metal layers should be copper for resistance to electromigration. This step is shown in Fig. 332. For clarity, these diagrams may not be to scale, and may not represent a cross section though any single plane of the nozzle. Fig. 331 is a key to representations of various materials in these manufacturing diagrams, and those of other cross referenced ink jet configurations.
2. Etch the CMOS oxide layers down to silicon or aluminum using Mask 1. This mask defines the nozzle chamber inlet cross, the edges of the print heads chips, and the vias for the contacts from the second level metal electrodes to the two halves of the split fixed magnetic plate.
3. Plasma etch the silicon to a depth of 15 microns, using oxide from step 2 as a mask. This etch does not substantially etch the second level metal. This step is shown in Fig. 333.
4. Deposit a seed layer of cobalt nickel iron alloy. CoNiFe is chosen due to a high saturation flux density of 2 Tesla, and a low coercivity. [Osaka, Tetsuya et al, A soft magnetic CoNiFe film with high saturation magnetic flux density, Nature 392, 796-798 (1998)].
5. Spin on 4 microns of resist, expose with Mask 2, and develop. This mask defines the split fixed magnetic plate, for which the resist acts as an electroplating mold. This step is shown in Fig. 334.
6. Electroplate 3 microns of CoNiFe. This step is shown in Fig. 335.
7. Strip the resist and etch the exposed seed layer. This step is shown in Fig. 336.
8. Deposit 0.5 microns of silicon nitride, which insulates the solenoid from the fixed magnetic plate.
9. Etch the nitride layer using Mask 3. This mask defines the contact vias from each end of the solenoid coil to the

two halves of the split fixed magnetic plate, as well as returning the nozzle chamber to a hydrophilic state. This step is shown in Fig. 337.

10. Deposit an adhesion layer plus a copper seed layer. Copper is used for its low resistivity (which results in higher efficiency) and its high electromigration resistance, which increases reliability at high current densities.

11. Spin on 13 microns of resist and expose using Mask 4, which defines the solenoid spiral coil, for which the resist acts as an electroplating mold. As the resist is thick and the aspect ratio is high, an X-ray proximity process, such as LIGA, can be used. This step is shown in Fig. 338.

12. Electroplate 12 microns of copper.

13. Strip the resist and etch the exposed copper seed layer. This step is shown in Fig. 339.

14. Wafer probe. All electrical connections are complete at this point, bond pads are accessible, and the chips are not yet separated.

15. Deposit 0.1 microns of silicon nitride, which acts as a corrosion barrier (not shown).

16. Deposit 0.1 microns of PTFE (not shown), which makes the top surface of the fixed magnetic plate and the solenoid hydrophobic, thereby preventing the space between the solenoid and the magnetic piston from filling with ink (if a water based ink is used. In general, these surfaces should be made ink-phobic).

17. Etch the PTFE layer using Mask 5. This mask defines the hydrophilic region of the nozzle chamber. The etch returns the nozzle chamber to a hydrophilic state.

18. Deposit 1 micron of sacrificial material. This defines the magnetic gap, and the travel of the magnetic piston.

19. Etch the sacrificial layer using Mask 6. This mask defines the spring posts. This step is shown in Fig. 340.

20. Deposit a seed layer of CoNiFe.

21. Deposit 12 microns of resist. As the solenoids will prevent even flow during a spin-on application, the resist should be sprayed on. Expose the resist using Mask 7, which defines the walls of the magnetic plunger, plus the spring posts. As the resist is thick and the aspect ratio is high, an X-ray proximity process, such as LIGA, can be used. This step is shown in Fig. 341.

22. Electroplate 12 microns of CoNiFe. This step is shown in Fig. 342.

23. Deposit a seed layer of CoNiFe.

24. Spin on 4 microns of resist, expose with Mask 8, and develop. This mask defines the roof of the magnetic plunger, the nozzle, the springs, and the spring posts. The resist forms an electroplating mold for these parts. This step is shown in Fig. 343.

25. Electroplate 3 microns of CoNiFe. This step is shown in Fig. 344.

26. Strip the resist, sacrificial, and exposed seed layers. This step is shown in Fig. 345.

27. Back-etch through the silicon wafer until the nozzle chamber inlet cross is reached using Mask 9. This etch may be performed using an ASE Advanced Silicon Etcher from Surface Technology Systems. The mask defines the ink inlets which are etched through the wafer. The wafer is also diced by this etch. This step is shown in Fig. 346.

28. Mount the print heads in their packaging, which may be a molded plastic former incorporating ink channels which supply the appropriate color ink to the ink inlets at the back of the wafer.

29. Connect the print heads to their interconnect systems. For a low profile connection with minimum disruption of airflow, TAB may be used. Wire bonding may also be used if the printer is to be operated with sufficient clearance to the paper.

30. Fill the completed print heads with ink and test them. A filled nozzle is shown in Fig. 347.

IJ USES

[0361] The presently disclosed ink jet printing technology is potentially suited to a wide range of printing system including: colour and monochrome office printers, short run digital printers, high speed digital printers, offset press supplemental printers, low cost scanning printers high speed pagewidth printers, notebook computers with inbuilt pagewidth printers, portable colour and monochrome printers, colour and monochrome copiers, colour and monochrome facsimile machines, combined printer, facsimile and copying machines, label printers, large format plotters, photograph copiers, printers for digital photographic "minilabs", video printers, PhotoCD printers, portable printers for PDAs, wallpaper printers, indoor sign printers, billboard printers, fabric printers, camera printers and fault tolerant commercial printer arrays.

Ink Jet Technologies

[0362] The embodiments of the invention use an ink jet printer type device. Of course many different devices could be used. However presently popular ink jet printing technologies are unlikely to be suitable.

[0363] The most significant problem with thermal inkjet is power consumption. This is approximately 100 times that required for high speed, and stems from the energy-inefficient means of drop ejection. This involves the rapid boiling

of water to produce a vapor bubble which expels the ink. Water has a very high heat capacity, and must be superheated in thermal inkjet applications. This leads to an efficiency of around 0.02%, from electricity input to drop momentum (and increased surface area) out.

[0364] The most significant problem with piezoelectric inkjet is size and cost. Piezoelectric crystals have a very small deflection at reasonable drive voltages, and therefore require a large area for each nozzle. Also, each piezoelectric actuator must be connected to its drive circuit on a separate substrate. This is not a significant problem at the current limit of around 300 nozzles per print head, but is a major impediment to the fabrication of pagewide print heads with 19,200 nozzles.

[0365] Ideally, the inkjet technologies used meet the stringent requirements of in-camera digital color printing and other high quality, high speed, low cost printing applications. To meet the requirements of digital photography, new inkjet technologies have been created. The target features include:

low power (less than 10 Watts)
high resolution capability (1,600 dpi or more)
photographic quality output
low manufacturing cost
small size (pagewidth times minimum cross section)
high speed (< 2 seconds per page).

[0366] All of these features can be met or exceeded by the inkjet systems described below with differing levels of difficulty. 45 different inkjet technologies have been developed by the Assignee to give a wide range of choices for high volume manufacture. These technologies form part of separate applications assigned to the present Assignee as set out in the table below.

[0367] The inkjet designs shown here are suitable for a wide range of digital printing systems, from battery powered one-time use digital cameras, through to desktop and network printers, and through to commercial printing systems

[0368] For ease of manufacture using standard process equipment, the print head is designed to be a monolithic 0.5 micron CMOS chip with MEMS post processing. For color photographic applications, the print head is 100 mm long, with a width which depends upon the inkjet type. The smallest print head designed is IJ38, which is 0.35 mm wide, giving a chip area of 35 square mm. The print heads each contain 19,200 nozzles plus data and control circuitry.

[0369] Ink is supplied to the back of the print head by injection molded plastic ink channels. The molding requires 50 micron features, which can be created using a lithographically micromachined insert in a standard injection molding tool. Ink flows through holes etched through the wafer to the nozzle chambers fabricated on the front surface of the wafer. The print head is connected to the camera circuitry by tape automated bonding.

Cross-Referenced Applications

[0370] The following table is a guide to cross-referenced patent applications filed concurrently herewith and discussed hereinafter with the reference being utilized in subsequent tables when referring to a particular case:

Docket No.	Reference	Title
IJ01US	IJ01	Radiant Plunger Ink Jet Printer
IJ02US	IJ02	Electrostatic Ink Jet Printer
IJ03US	IJ03	Planar Thermoelastic Bend Actuator Ink Jet
IJ04US	IJ04	Stacked Electrostatic Ink Jet Printer
IJ05US	IJ05	Reverse Spring Lever Ink Jet Printer
IJ06US	IJ06	Paddle Type Ink Jet Printer
IJ07US	IJ07	Permanent Magnet Electromagnetic Ink Jet Printer
IJ08US	IJ08	Planar Swing Grill Electromagnetic Ink Jet Printer
IJ09US	IJ09	Pump Action Refill Ink Jet Printer
IJ10US	IJ10	Pulsed Magnetic Field Ink Jet Printer
IJ11US	IJ11	Two Plate Reverse Firing Electromagnetic Ink Jet Printer

(continued)

Docket No.	Reference	Title
IJ12US	IJ12	Linear Stepper Actuator Ink Jet Printer
IJ13US	IJ13	Gear Driven Shutter Ink Jet Printer
IJ14US	IJ14	Tapered Magnetic Pole Electromagnetic Ink Jet Printer
IJ15US	IJ15	Linear Spring Electromagnetic Grill Ink Jet Printer
IJ16US	IJ16	Lorenz Diaphragm Electromagnetic Ink Jet Printer
IJ17US	IJ17	PTFE Surface Shooting Shuttered Oscillating Pressure Ink Jet Printer
IJ18US	IJ18	Buckle Grip Oscillating Pressure Ink Jet Printer
IJ19US	IJ19	Shutter Based Ink Jet Printer
IJ20US	IJ20	Curling Calyx Thermoelastic Ink Jet Printer
IJ21US	IJ21	Thermal Actuated Ink Jet Printer
IJ22US	IJ22	Iris Motion Ink Jet Printer
IJ23US	IJ23	Direct Firing Thermal Bend Actuator Ink Jet Printer
IJ24US	IJ24	Conductive PTFE Ben Activator Vented Ink Jet Printer
IJ25US	IJ25	Magnetostrictive Ink Jet Printer
IJ26US	IJ26	Shape Memory Alloy Ink Jet Printer
IJ27US	IJ27	Buckle Plate Ink Jet Printer
IJ28US	IJ28	Thermal Elastic Rotary Impeller Ink Jet Printer
IJ29US	IJ29	Thermoelastic Bend Actuator Ink Jet Printer
IJ30US	IJ30	Thermoelastic Bend Actuator Using PTFE and Corrugated Copper Ink Jet Printer
IJ31 US	IJ31	Bend Actuator Direct Ink Supply Ink Jet Printer
IJ32US	IJ32	A High Young's Modulus Thermoelastic Ink Jet Printer
IJ33US	IJ33	Thermally actuated slotted chamber wall inkjet printer
IJ34US	IJ34	Ink Jet Printer having a thermal actuator comprising an external coiled spring
IJ35US	IJ35	Trough Container Ink Jet Printer
IJ36US	IJ36	Dual Chamber Single Vertical Actuator Ink Jet
IJ37US	IJ37	Dual Nozzle Single Horizontal Fulcrum Actuator Ink Jet
IJ38US	IJ38	Dual Nozzle Single Horizontal Actuator Ink Jet
IJ39US	IJ39	A single bend actuator cupped paddle inkjet printing device
IJ40US	IJ40	A thermally actuated inkjet printer having a series of thermal actuator units
IJ41US	IJ41	A thermally actuated inkjet printer including a tapered heater element
IJ42US	IJ42	Radial Back-Curling Thermoelastic Ink Jet
IJ43US	IJ43	Inverted Radial Back-Curling Thermoelastic Ink Jet
IJ44US	IJ44	Surface bend actuator vented ink supply ink jet printer
IJ45US	IJ45	Coil Actuated Magnetic Plate Ink Jet Printer

Tables of Drop-on-Demand Inkjets

[0371] Eleven important characteristics of the fundamental operation of individual inkjet nozzles have been identified.

These characteristics are largely orthogonal, and so can be elucidated as an eleven dimensional matrix. Most of the eleven axes of this matrix include entries developed by the present assignee.

[0372] The following tables form the axes of an eleven dimensional table of inkjet types.

Actuator mechanism (18 types)
Basic operation mode (7 types)
Auxiliary mechanism (8 types)
Actuator amplification or modification method (17 types)
Actuator motion (19 types)
Nozzle refill method (4 types)
Method of restricting back-flow through inlet (10 types)
Nozzle clearing method (9 types)
Nozzle plate construction (9 types)
Drop ejection direction (5 types)
Ink type (7 types)

[0373] The complete eleven dimensional table represented by these axes contains 36.9 billion possible configurations of inkjet nozzle. While not all of the possible combinations result in a viable inkjet technology, many million configurations are viable. It is clearly impractical to elucidate all of the possible configurations. Instead, certain inkjet types have been investigated in detail. These are designated IJ01 to IJ45 above.

[0374] Other inkjet configurations can readily be derived from these 45 examples by substituting alternative configurations along one or more of the 11 axes. Most of the IJ01 to IJ45 examples can be made into inkjet print heads with characteristics superior to any currently available inkjet technology.

[0375] Where there are prior art examples known to the inventor, one or more of these examples are listed in the examples column of the tables below. The IJ01 to IJ45 series are also listed in the examples column. In some cases, a printer may be listed more than once in a table, where it shares characteristics with more than one entry.

[0376] Suitable applications include: Home printers, Office network printers, Short run digital printers, Commercial print systems, Fabric printers, Pocket printers, Internet WWW printers, Video printers, Medical imaging, Wide format printers, Notebook PC printers, Fax machines, Industrial printing systems, Photocopiers, Photographic minilabs etc.

[0377] The information associated with the aforementioned 11 dimensional matrix are set out in the following tables.

Actuator mechanism (applied only to selected ink drops)

Actuator Mechanism	Description	Advantages	Disadvantages	Examples
Thermal bubble	An electrothermal heater heats the ink to above boiling point, transferring significant heat to the aqueous ink. A bubble nucleates and quickly forms, expelling the ink. The efficiency of the process is low, with typically less than 0.05% of the electrical energy being transformed into kinetic energy of the drop.	♦ Large force generated ♦ Simple construction ♦ No moving parts ♦ Fast operation ♦ Small chip area required for actuator	♦ High power ♦ Ink carrier limited to water ♦ Low efficiency ♦ High temperatures required ♦ High mechanical stress ♦ Unusual materials required ♦ Large drive transistors ♦ Cavitation causes actuator failure ♦ Kogation reduces bubble formation ♦ Large print heads are difficult to fabricate	♦ Canon Bubblejet 1979 Endo et al GB patent 2,007,162 ♦ Xerox heater-in-pit 1990 Hawkins et al USP 4,899,181 ♦ Hewlett-Packard TIJ 1982 Vaught et al USP 4,490,728
Piezoelectric	A piezoelectric crystal such as lead lanthanum zirconate (PZT) is electrically activated, and either expands, shears, or bends to apply pressure to the ink, ejecting drops.	♦ Low power consumption ♦ Many ink types can be used ♦ Fast operation ♦ High efficiency	♦ Very large area required for actuator ♦ Difficult to integrate with electronics ♦ High voltage drive transistors required ♦ Full pagewidth print heads impractical due to actuator size ♦ Requires electrical poling in high field strengths during manufacture	♦ Kyser et al USP 3,946,398 ♦ Zoltan USP 3,683,212 ♦ 1973 Stemme USP 3,747,120 ♦ Epson Stylus ♦ Tektronix ♦ IJ04

Electro-strictive	An electric field is used to activate electrostriction in relaxor materials such as lead lanthanum zirconate titanate (PLZT) or lead magnesium niobate (PMN).	♦ Low power consumption ♦ Many ink types can be used ♦ Low thermal expansion ♦ Electric field strength required (approx. 3.5 V/μm) can be generated without difficulty ♦ Does not require electrical poling	♦ Low maximum strain (approx. 0.01%) ♦ Large area required for actuator due to low strain ♦ Response speed is marginal (~ 10 μs) ♦ High voltage drive transistors required ♦ Full pagewidth print heads impractical due to actuator size	♦ Seiko Epson, Usui et all JP 253401/96 ♦ IJ04
Ferroelectric	An electric field is used to induce a phase transition between the antiferroelectric (AFE) and ferroelectric (FE) phase. Perovskite materials such as tin modified lead lanthanum zirconate titanate (PLZSnT) exhibit large strains of up to 1% associated with the AFE to FE phase transition.	♦ Low power consumption ♦ Many ink types can be used ♦ Fast operation (< 1 μs) ♦ Relatively high longitudinal strain ♦ High efficiency ♦ Electric field strength of around 3 V/μm can be readily provided	♦ Difficult to integrate with electronics ♦ Unusual materials such as PLZSnT are required ♦ Actuators require a large area	♦ IJ04

Electrostatic plates	Conductive plates are separated by a compressible or fluid dielectric (usually air). Upon application of a voltage, the plates attract each other and displace ink, causing drop ejection. The conductive plates may be in a comb or honeycomb structure, or stacked to increase the surface area and therefore the force.	♦ Low power consumption ♦ Many ink types can be used ♦ Fast operation	♦ Difficult to operate electrostatic devices in an aqueous environment ♦ The electrostatic actuator will normally need to be separated from the ink ♦ Very large area required to achieve high forces ♦ High voltage drive transistors may be required ♦ Full pagewidth print heads are not competitive due to actuator size	♦ IJ02, IJ04
Electrostatic pull on ink	A strong electric field is applied to the ink, whereupon electrostatic attraction accelerates the ink towards the print medium.	♦ Low current consumption ♦ Low temperature	♦ High voltage required ♦ May be damaged by sparks due to air breakdown ♦ Required field strength increases as the drop size decreases ♦ High voltage drive transistors required ♦ Electrostatic field attracts dust	♦ 1989 Saito et al, USP 4,799,068 ♦ 1989 Miura et al, USP 4,810,954 ♦ Tone-jet

Permanent magnet electro-magnetic	An electromagnet directly attracts a permanent magnet, displacing ink and causing drop ejection. Rare earth magnets with a field strength around 1 Tesla can be used. Examples are: Samarium Cobalt (SaCo) and magnetic materials in the neodymium iron boron family (NdFeB, NdDyFeBNb, NdDyFeB, etc)	♦ Low power consumption ♦ Many ink types can be used ♦ Fast operation ♦ High efficiency ♦ Easy extension from single nozzles to pagewidth print heads	♦ Complex fabrication ♦ Permanent magnetic material such as Neodymium Iron Boron (NdFeB) required. ♦ High local currents required ♦ Copper metalization should be used for long electromigration lifetime and low resistivity ♦ Pigmented inks are usually infeasible ♦ Operating temperature limited to the Curie temperature (around 540 K)	♦ IJ07, IJ10
Soft magnetic core electro-magnetic	A solenoid induced a magnetic field in a soft magnetic core or yoke fabricated from a ferrous material such as electroplated iron alloys such as CoNiFe [1], CoFe, or NiFe alloys. Typically, the soft magnetic material is in two parts, which are normally held apart by a spring. When the solenoid is actuated, the two parts attract, displacing the ink.	♦ Low power consumption ♦ Many ink types can be used ♦ Fast operation ♦ High efficiency ♦ Easy extension from single nozzles to pagewidth print heads	♦ Complex fabrication ♦ Materials not usually present in a CMOS fab such as NiFe, CoNiFe, or CoFe are required ♦ High local currents required ♦ Copper metalization should be used for long electromigration lifetime and low resistivity ♦ Electroplating is required ♦ High saturation flux density is required (2.0-2.1 T is achievable with CoNiFe [1])	♦ IJ01, IJ05, IJ08, IJ10 ♦ IJ12, IJ14, IJ15, IJ17

Magnetic Lorenz force	The Lorenz force acting on a current carrying wire in a magnetic field is utilized. This allows the magnetic field to be supplied externally to the print head, for example with rare earth permanent magnets. Only the current carrying wire need be fabricated on the print-head, simplifying materials requirements.	♦ Low power consumption ♦ Many ink types can be used ♦ Fast operation ♦ High efficiency ♦ Easy extension from single nozzles to pagewidth print heads	♦ Force acts as a twisting motion ♦ Typically, only a quarter of the solenoid length provides force in a useful direction ♦ High local currents required ♦ Copper metalization should be used for long electromigration lifetime and low resistivity ♦ Pigmented inks are usually infeasible	♦ IJ06, IJ11, IJ13, IJ16
Magneto-striction	The actuator uses the giant magnetostrictive effect of materials such as Terfenol-D (an alloy of terbium, dysprosium and iron developed at the Naval Ordnance Laboratory, hence Ter-Fe-NOL). For best efficiency, the actuator should be pre-stressed to approx. 8 MPa.	♦ Many ink types can be used ♦ Fast operation ♦ Easy extension from single nozzles to pagewidth print heads ♦ High force is available	♦ Force acts as a twisting motion ♦ Unusual materials such as Terfenol-D are required ♦ High local currents required ♦ Copper metalization should be used for long electromigration lifetime and low resistivity ♦ Pre-stressing may be required	♦ Fischenbeck, USP 4,032,929 ♦ IJ25

Surface tension reduction	Ink under positive pressure is held in a nozzle by surface tension. The surface tension of the ink is reduced below the bubble threshold, causing the ink to egress from the nozzle.	♦ Low power consumption ♦ Simple construction ♦ No unusual materials required in fabrication ♦ High efficiency ♦ Easy extension from single nozzles to pagewidth print heads	♦ Requires supplementary force to effect drop separation ♦ Requires special ink surfactants ♦ Speed may be limited by surfactant properties	♦ Silverbrook, EP 0771 658 A2 and related patent applications
Viscosity reduction	The ink viscosity is locally reduced to select which drops are to be ejected. A viscosity reduction can be achieved electrothermally with most inks, but special inks can be engineered for a 100:1 viscosity reduction.	♦ Simple construction ♦ No unusual materials required in fabrication ♦ Easy extension from single nozzles to pagewidth print heads	♦ Requires supplementary force to effect drop separation ♦ Requires special ink viscosity properties ♦ High speed is difficult to achieve ♦ Requires oscillating ink pressure ♦ A high temperature difference (typically 80 degrees) is required	♦ Silverbrook, EP 0771 658 A2 and related patent applications
Acoustic	An acoustic wave is generated and focussed upon the drop ejection region.	♦ Can operate without a nozzle plate	♦ Complex drive circuitry ♦ Complex fabrication ♦ Low efficiency ♦ Poor control of drop position ♦ Poor control of drop volume	♦ 1993 Hadimioglu et al, EUP 550,192 ♦ 1993 Elrod et al, EUP 572,220

Thermoelastic bend actuator	An actuator which relies upon differential thermal expansion upon Joule heating is used.	♦ Low power consumption ♦ Many ink types can be used ♦ Simple planar fabrication ♦ Small chip area required for each actuator ♦ Fast operation ♦ High efficiency ♦ CMOS compatible voltages and currents ♦ Standard MEMS processes can be used ♦ Easy extension from single nozzles to pagewidth print heads	♦ Efficient aqueous operation requires a thermal insulator on the hot side ♦ Corrosion prevention can be difficult ♦ Pigmented inks may be infeasible, as pigment particles may jam the bend actuator	♦ IJ03, IJ09, IJ17, IJ18 ♦ IJ19, IJ20, IJ21, IJ22 ♦ IJ23, IJ24, IJ27, IJ28 ♦ IJ29, IJ30, IJ31, IJ32 ♦ IJ33, IJ34, IJ35, IJ36 ♦ IJ37, IJ38 ,IJ39, IJ40 ♦ IJ41

High CTE thermoelastic actuator	A material with a very high coefficient of thermal expansion (CTE) such as polytetrafluoroethylene (PTFE) is used. As high CTE materials are usually non-conductive, a heater fabricated from a conductive material is incorporated. A 50 μm long PTFE bend actuator with polysilicon heater and 15 mW power input can provide 180 μN force and 10 μm deflection. Actuator motions include: 1) Bend 2) Push 3) Buckle 4) Rotate	♦ High force can be generated ♦ PTFE is a candidate for low dielectric constant insulation in ULSI ♦ Very low power consumption ♦ Many ink types can be used ♦ Simple planar fabrication ♦ Small chip area required for each actuator ♦ Fast operation ♦ High efficiency ♦ CMOS compatible voltages and currents ♦ Easy extension from single nozzles to pagewidth print heads	♦ Requires special material (e.g. PTFE) ♦ Requires a PTFE deposition process, which is not yet standard in ULSI fabs ♦ PTFE deposition cannot be followed with high temperature (above 350 °C) processing ♦ Pigmented inks may be infeasible, as pigment particles may jam the bend actuator	♦ IJ09, IJ17, IJ18, IJ20 ♦ IJ21, IJ22, IJ23, IJ24 ♦ IJ27, IJ28, IJ29, IJ30 ♦ IJ31, IJ42, IJ43, IJ44

Conductive polymer thermoelastic actuator	A polymer with a high coefficient of thermal expansion (such as PTFE) is doped with conducting substances to increase its conductivity to about 3 orders of magnitude below that of copper. The conducting polymer expands when resistively heated. Examples of conducting dopants include: 1) Carbon nanotubes 2) Metal fibers 3) Conductive polymers such as doped polythiophene 4) Carbon granules	♦ High force can be generated ♦ Very low power consumption ♦ Many ink types can be used ♦ Simple planar fabrication ♦ Small chip area required for each actuator ♦ Fast operation ♦ High efficiency ♦ CMOS compatible voltages and currents ♦ Easy extension from single nozzles to pagewidth print heads	♦ Requires special materials development (High CTE conductive polymer) ♦ Requires a PTFE deposition process, which is not yet standard in ULSI fabs ♦ PTFE deposition cannot be followed with high temperature (above 350 °C) processing ♦ Evaporation and CVD deposition techniques cannot be used ♦ Pigmented inks may be infeasible, as pigment particles may jam the bend actuator	♦ IJ24
Shape memory alloy	A shape memory alloy such as TiNi (also known as Nitinol - Nickel Titanium alloy developed at the Naval Ordnance Laboratory) is thermally switched between its weak martensitic state and its high stiffness austenic state. The shape of the actuator in its martensitic state is deformed relative to the austenic shape. The shape change causes ejection of a drop.	♦ High force is available (stresses of hundreds of MPa) ♦ Large strain is available (more than 3%) ♦ High corrosion resistance ♦ Simple construction ♦ Easy extension from single nozzles to pagewidth print heads ♦ Low voltage operation	♦ Fatigue limits maximum number of cycles ♦ Low strain (1%) is required to extend fatigue resistance ♦ Cycle rate limited by heat removal ♦ Requires unusual materials (TiNi) ♦ The latent heat of transformation must be provided ♦ High current operation ♦ Requires pre-stressing to distort the martensitic state	♦ IJ26

Linear Magnetic Actuator	Linear magnetic actuators include the Linear Induction Actuator (LIA), Linear Permanent Magnet Synchronous Actuator (LPMSA), Linear Reluctance Synchronous Actuator (LRSA), Linear Switched Reluctance Actuator (LSRA), and the Linear Stepper Actuator (LSA).	♦ Linear Magnetic actuators can be constructed with high thrust, long travel, and high efficiency using planar semiconductor fabrication techniques ♦ Long actuator travel is available ♦ Medium force is available ♦ Low voltage operation	♦ Requires unusual semiconductor materials such as soft magnetic alloys (e.g. CoNiFe [1]) ♦ Some varieties also require permanent magnetic materials such as Neodymium iron boron (NdFeB) ♦ Requires complex multi-phase drive circuitry ♦ High current operation	♦ IJ12

Basic operation mode

Operational mode	Description	Advantages	Disadvantages	Examples
Actuator directly pushes ink	This is the simplest mode of operation: the actuator directly supplies sufficient kinetic energy to expel the drop. The drop must have a sufficient velocity to overcome the surface tension.	♦ Simple operation . ♦ No external fields required ♦ Satellite drops can be avoided if drop velocity is less than 4 m/s ♦ Can be efficient, depending upon the actuator used	♦ Drop repetition rate is usually limited to less than 10 KHz. However, this is not fundamental to the method, but is related to the refill method normally used ♦ All of the drop kinetic energy must be provided by the actuator ♦ Satellite drops usually form if drop velocity is greater than 4.5 m/s	♦ Thermal inkjet ♦ Piezoelectric inkjet ♦ IJ01, IJ02, IJ03, IJ04 ♦ IJ05, IJ06, IJ07, IJ09 ♦ IJ11, IJ12, IJ14, IJ16 ♦ IJ20, IJ22, IJ23, IJ24 ♦ IJ25, IJ26, IJ27, IJ28 ♦ IJ29, IJ30, IJ31, IJ32 ♦ IJ33, IJ34, IJ35, IJ36 ♦ IJ37, IJ38, IJ39, IJ40 ♦ IJ41, IJ42, IJ43, IJ44

Proximity	The drops to be printed are selected by some manner (e.g. thermally induced surface tension reduction of pressurized ink). Selected drops are separated from the ink in the nozzle by contact with the print medium or a transfer roller.	♦ Very simple print head fabrication can be used ♦ The drop selection means does not need to provide the energy required to separate the drop from the nozzle	♦ Requires close proximity between the print head and the print media or transfer roller ♦ May require two print heads printing alternate rows of the image ♦ Monolithic color print heads are difficult	♦ Silverbrook, EP 0771 658 A2 and related patent applications
Electrostatic pull on ink	The drops to be printed are selected by some manner (e.g. thermally induced surface tension reduction of pressurized ink). Selected drops are separated from the ink in the nozzle by a strong electric field.	♦ Very simple print head fabrication can be used ♦ The drop selection means does not need to provide the energy required to separate the drop from the nozzle	♦ Requires very high electrostatic field ♦ Electrostatic field for small nozzle sizes is above air breakdown ♦ Electrostatic field may attract dust	♦ Silverbrook, EP 0771 658 A2 and related patent applications ♦ Tone-Jet
Magnetic pull on ink	The drops to be printed are selected by some manner (e.g. thermally induced surface tension reduction of pressurized ink). Selected drops are separated from the ink in the nozzle by a strong magnetic field acting on the magnetic ink.	♦ Very simple print head fabrication can be used ♦ The drop selection means does not need to provide the energy required to separate the drop from the nozzle	♦ Requires magnetic ink ♦ Ink colors other than black are difficult ♦ Requires very high magnetic fields	♦ Silverbrook, EP 0771 658 A2 and related patent applications

Shutter	The actuator moves a shutter to block ink flow to the nozzle. The ink pressure is pulsed at a multiple of the drop ejection frequency.	♦ High speed (>50 KHz) operation can be achieved due to reduced refill time ♦ Drop timing can be very accurate ♦ The actuator energy can be very low	♦ Moving parts are required ♦ Requires ink pressure modulator ♦ Friction and wear must be considered ♦ Stiction is possible	♦ IJ13, IJ17, IJ21
Shuttered grill	The actuator moves a shutter to block ink flow through a grill to the nozzle. The shutter movement need only be equal to the width of the grill holes.	♦ Actuators with small travel can be used ♦ Actuators with small force can be used ♦ High speed (>50 KHz) operation can be achieved	♦ Moving parts are required ♦ Requires ink pressure modulator ♦ Friction and wear must be considered ♦ Stiction is possible	♦ IJ08, IJ15, IJ18, IJ19
Pulsed magnetic pull on ink pusher	A pulsed magnetic field attracts an 'ink pusher' at the drop ejection frequency. An actuator controls a catch, which prevents the ink pusher from moving when a drop is not to be ejected.	♦ Extremely low energy operation is possible ♦ No heat dissipation problems	♦ Requires an external pulsed magnetic field ♦ Requires special materials for both the actuator and the ink pusher ♦ Complex construction	♦ IJ10

Auxiliary mechanism (applied to all nozzles)

Auxiliary Mechanism	Description	Advantages	Disadvantages	Examples

None	The actuator directly fires the ink drop, and there is no external field or other mechanism required.	♦ Simplicity of construction ♦ Simplicity of operation ♦ Small physical size	♦ Drop ejection energy must be supplied by individual nozzle actuator	♦ Most inkjets, including piezoelectric and thermal bubble. ♦ IJ01- IJ07, IJ09, IJ11 ♦ IJ12, IJ14, IJ20, IJ22 ♦ IJ23-IJ45
Oscillating ink pressure (including acoustic stimulation)	The ink pressure oscillates, providing much of the drop ejection energy. The actuator selects which drops are to be fired by selectively blocking or enabling nozzles. The ink pressure oscillation may be achieved by vibrating the print head, or preferably by an actuator in the ink supply.	♦ Oscillating ink pressure can provide a refill pulse, allowing higher operating speed ♦ The actuators may operate with much lower energy ♦ Acoustic lenses can be used to focus the sound on the nozzles	♦ Requires external ink pressure oscillator ♦ Ink pressure phase and amplitude must be carefully controlled ♦ Acoustic reflections in the ink chamber must be designed for	♦ Silverbrook, EP 0771 658 A2 and related patent applications ♦ IJ08, IJ13, IJ15, IJ17 ♦ IJ18, IJ19, IJ21
Media proximity	The print head is placed in close proximity to the print medium. Selected drops protrude from the print head further than unselected drops, and contact the print medium. The drop soaks into the medium fast enough to cause drop separation.	♦ Low power ♦ High accuracy ♦ Simple print head construction	♦ Precision assembly required ♦ Paper fibers may cause problems ♦ Cannot print on rough substrates	♦ Silverbrook, EP 0771 658 A2 and related patent applications

Transfer roller	Drops are printed to a transfer roller instead of straight to the print medium. A transfer roller can also be used for proximity drop separation.	♦ High accuracy ♦ Wide range of print substrates can be used ♦ Ink can be dried on the transfer roller	♦ Bulky ♦ Expensive ♦ Complex construction	♦ Silverbrook, EP 0771 658 A2 and related patent applications ♦ Tektronix hot melt piezoelectric inkjet ♦ Any of the IJ series
Electrostatic	An electric field is used to accelerate selected drops towards the print medium.	♦ Low power ♦ Simple print head construction	♦ Field strength required for separation of small drops is near or above air breakdown	♦ Silverbrook, EP 0771 658 A2 and related patent applications ♦ Tone-Jet
Direct magnetic field	A magnetic field is used to accelerate selected drops of magnetic ink towards the print medium.	♦ Low power ♦ Simple print head construction	♦ Requires magnetic ink ♦ Requires strong magnetic field	♦ Silverbrook, EP 0771 658 A2 and related patent applications
Cross magnetic field	The print head is placed in a constant magnetic field. The Lorenz force in a current carrying wire is used to move the actuator.	♦ Does not require magnetic materials to be integrated in the print head manufacturing process	♦ Requires external magnet ♦ Current densities may be high, resulting in electromigration problems	♦ IJ06, IJ16
Pulsed magnetic field	A pulsed magnetic field is used to cyclically attract a paddle, which pushes on the ink. A small actuator moves a catch, which selectively prevents the paddle from moving.	♦ Very low power operation is possible ♦ Small print head size	♦ Complex print head construction ♦ Magnetic materials required in print head	♦ IJ10

Actuator amplification or modification method

Actuator amplification	Description	Advantages	Disadvantages	Examples
None	No actuator mechanical amplification is used. The actuator directly drives the drop ejection process.	♦ Operational simplicity	♦ Many actuator mechanisms have insufficient travel, or insufficient force, to efficiently drive the drop ejection process	♦ Thermal Bubble Inkjet ♦ IJ01, IJ02, IJ06, IJ07 ♦ IJ16, IJ25, IJ26
Differential expansion bend actuator	An actuator material expands more on one side than on the other. The expansion may be thermal, piezoelectric, magnetostrictive, or other mechanism.	♦ Provides greater travel in a reduced print head area ♦ The bend actuator converts a high force low travel actuator mechanism to high travel, lower force mechanism.	♦ High stresses are involved ♦ Care must be taken that the materials do not delaminate ♦ Residual bend resulting from high temperature or high stress during formation	♦ Piezoelectric ♦ IJ03, IJ09, IJ17-IJ24 ♦ IJ27, IJ29-IJ39, IJ42, ♦ IJ43, IJ44
Transient bend actuator	A trilayer bend actuator where the two outside layers are identical. This cancels bend due to ambient temperature and residual stress. The actuator only responds to transient heating of one side or the other.	♦ Very good temperature stability ♦ High speed, as a new drop can be fired before heat dissipates ♦ Cancels residual stress of formation	♦ High stresses are involved ♦ Care must be taken that the materials do not delaminate	♦ IJ40, IJ41
Actuator stack	A series of thin actuators are stacked. This can be appropriate where actuators require high electric field strength, such as electrostatic and piezoelectric actuators.	♦ Increased travel ♦ Reduced drive voltage	♦ Increased fabrication complexity ♦ Increased possibility of short circuits due to pinholes	♦ Some piezoelectric ink jets ♦ IJ04

Multiple actuators	Multiple smaller actuators are used simultaneously to move the ink. Each actuator need provide only a portion of the force required.	♦ Increases the force available from an actuator ♦ Multiple actuators can be positioned to control ink flow accurately	♦ Actuator forces may not add linearly, reducing efficiency	♦ IJ12, IJ13, IJ18, IJ20 ♦ IJ22, IJ28, IJ42, IJ43
Linear Spring	A linear spring is used to transform a motion with small travel and high force into a longer travel, lower force motion.	♦ Matches low travel actuator with higher travel requirements ♦ Non-contact method of motion transformation	♦ Requires print head area for the spring	♦ IJ15
Reverse spring	The actuator loads a spring. When the actuator is turned off, the spring releases. This can reverse the force/distance curve of the actuator to make it compatible with the force/time requirements of the drop ejection.	♦ Better coupling to the ink	♦ Fabrication complexity ♦ High stress in the spring	♦ IJ05, IJ11
Coiled actuator	A bend actuator is coiled to provide greater travel in a reduced chip area.	♦ Increases travel ♦ Reduces chip area ♦ Planar implementations are relatively easy to fabricate.	♦ Generally restricted to planar implementations due to extreme fabrication difficulty in other orientations.	♦ IJ17, IJ21, IJ34, IJ35

Flexure bend actuator	A bend actuator has a small region near the fixture point, which flexes much more readily than the remainder of the actuator. The actuator flexing is effectively converted from an even coiling to an angular bend, resulting in greater travel of the actuator tip.	♦ Simple means of increasing travel of a bend actuator	♦ Care must be taken not to exceed the elastic limit in the flexure area ♦ Stress distribution is very uneven ♦ Difficult to accurately model with finite element analysis	♦ IJ10, IJ19, IJ33
Gears	Gears can be used to increase travel at the expense of duration. Circular gears, rack and pinion, ratchets, and other gearing methods can be used.	♦ Low force, low travel actuators can be used ♦ Can be fabricated using standard surface MEMS processes	♦ Moving parts are required ♦ Several actuator cycles are required ♦ More complex drive electronics ♦ Complex construction ♦ Friction, friction, and wear are possible	♦ IJ13
Catch	The actuator controls a small catch. The catch either enables or disables movement of an ink pusher that is controlled in a bulk manner.	♦ Very low actuator energy ♦ Very small actuator size	♦ Complex construction ♦ Requires external force ♦ Unsuitable for pigmented inks	♦ IJ10
Buckle plate	A buckle plate can be used to change a slow actuator into a fast motion. It can also convert a high force, low travel actuator into a high travel, medium force motion.	♦ Very fast movement achievable	♦ Must stay within elastic limits of the materials for long device life ♦ High stresses involved ♦ Generally high power requirement	♦ S. Hirata et al, "An Ink-jet Head ...", Proc. IEEE MEMS, Feb. 1996, pp 418-423. ♦ IJ18, IJ27

Tapered magnetic pole	A tapered magnetic pole can increase travel at the expense of force.	♦ Linearizes the magnetic force/distance curve	♦ Complex construction	♦ IJ14
Lever	A lever and fulcrum is used to transform a motion with small travel and high force into a motion with longer travel and lower force. The lever can also reverse the direction of travel.	♦ Matches low travel actuator with higher travel requirements ♦ Fulcrum area has no linear movement, and can be used for a fluid seal	♦ High stress around the fulcrum	♦ IJ32, IJ36, IJ37
Rotary impeller	The actuator is connected to a rotary impeller. A small angular deflection of the actuator results in a rotation of the impeller vanes, which push the ink against stationary vanes and out of the nozzle.	♦ High mechanical advantage ♦ The ratio of force to travel of the actuator can be matched to the nozzle requirements by varying the number of impeller vanes	♦ Complex construction ♦ Unsuitable for pigmented inks	♦ IJ28
Acoustic lens	A refractive or diffractive (e.g. zone plate) acoustic lens is used to concentrate sound waves.	♦ No moving parts	♦ Large area required ♦ Only relevant for acoustic ink jets	♦ 1993 Hadimioglu et al, EUP 550,192 ♦ 1993 Elrod et al, EUP 572,220
Sharp conductive point	A sharp point is used to concentrate an electrostatic field.	♦ Simple construction	♦ Difficult to fabricate using standard VLSI processes for a surface ejecting ink-jet ♦ Only relevant for electrostatic ink jets	♦ Tone-jet

Actuator motion

Actuator motion	Description	Advantages	Disadvantages	Examples
Volume expansion	The volume of the actuator changes, pushing the ink in all directions.	♦ Simple construction in the case of thermal ink jet	♦ High energy is typically required to achieve volume expansion. This leads to thermal stress, cavitation, and kogation in thermal ink jet implementations	♦ Hewlett-Packard Thermal Inkjet ♦ Canon Bubblejet
Linear, normal to chip surface	The actuator moves in a direction normal to the print head surface. The nozzle is typically in the line of movement.	♦ Efficient coupling to ink drops ejected normal to the surface	♦ High fabrication complexity may be required to achieve perpendicular motion	♦ IJ01, IJ02, IJ04, IJ07 ♦ IJ11, IJ14
Linear, parallel to chip surface	The actuator moves parallel to the print head surface. Drop ejection may still be normal to the surface.	♦ Suitable for planar fabrication	♦ Fabrication complexity ♦ Friction ♦ Stiction	♦ IJ12, IJ13, IJ15, IJ33, ♦ IJ34, IJ35, IJ36
Membrane push	An actuator with a high force but small area is used to push a stiff membrane that is in contact with the ink.	♦ The effective area of the actuator becomes the membrane area	♦ Fabrication complexity ♦ Actuator size ♦ Difficulty of integration in a VLSI process	♦ 1982 Howkins USP 4,459,601
Rotary	The actuator causes the rotation of some element, such a grill or impeller	♦ Rotary levers may be used to increase travel ♦ Small chip area requirements	♦ Device complexity ♦ May have friction at a pivot point	♦ IJ05, IJ08, IJ13, IJ28

Bend	The actuator bends when energized. This may be due to differential thermal expansion, piezoelectric expansion, magnetostriction, or other form of relative dimensional change.	♦ A very small change in dimensions can be converted to a large motion.	♦ Requires the actuator to be made from at least two distinct layers, or to have a thermal difference across the actuator	♦ 1970 Kyser et al USP 3,946,398 ♦ 1973 Stemme USP 3,747,120 ♦ IJ03, IJ09, IJ10, IJ19 ♦ IJ23, IJ24, IJ25, IJ29 ♦ IJ30, IJ31, IJ33, IJ34 ♦ IJ35
Swivel	The actuator swivels around a central pivot. This motion is suitable where there are opposite forces applied to opposite sides of the paddle, e.g. Lorenz force.	♦ Allows operation where the net linear force on the paddle is zero ♦ Small chip area requirements	♦ Inefficient coupling to the ink motion	♦ IJ06
Straighten	The actuator is normally bent, and straightens when energized.	♦ Can be used with shape memory alloys where the austenic phase is planar	♦ Requires careful balance of stresses to ensure that the quiescent bend is accurate	♦ IJ26, IJ32
Double bend	The actuator bends in one direction when one element is energized, and bends the other way when another element is energized.	♦ One actuator can be used to power two nozzles. ♦ Reduced chip size. ♦ Not sensitive to ambient temperature	♦ Difficult to make the drops ejected by both bend directions identical. ♦ A small efficiency loss compared to equivalent single bend actuators.	♦ IJ36, IJ37, IJ38
Shear	Energizing the actuator causes a shear motion in the actuator material.	♦ Can increase the effective travel of piezoelectric actuators	♦ Not readily applicable to other actuator mechanisms	♦ 1985 Fishbeck USP 4,584,590

Radial constriction	The actuator squeezes an ink reservoir, forcing ink from a constricted nozzle.	♦ Relatively easy to fabricate single nozzles from glass tubing as macroscopic structures	♦ High force required ♦ Inefficient ♦ Difficult to integrate with VLSI processes	♦ 1970 Zoltan USP 3,683,212
Coil / uncoil	A coiled actuator uncoils or coils more tightly. The motion of the free end of the actuator ejects the ink.	♦ Easy to fabricate as a planar VLSI process ♦ Small area required, therefore low cost	♦ Difficult to fabricate for non-planar devices ♦ Poor out-of-plane stiffness	♦ IJ17, IJ21, IJ34, IJ35
Bow	The actuator bows (or buckles) in the middle when energized.	♦ Can increase the speed of travel ♦ Mechanically rigid	♦ Maximum travel is constrained ♦ High force required	♦ IJ16, IJ18, IJ27
Push-Pull	Two actuators control a shutter. One actuator pulls the shutter, and the other pushes it.	♦ The structure is pinned at both ends, so has a high out-of-plane rigidity	♦ Not readily suitable for inkjets which directly push the ink	♦ IJ18
Curl inwards	A set of actuators curl inwards to reduce the volume of ink that they enclose.	♦ Good fluid flow to the region behind the actuator increases efficiency	♦ Design complexity	♦ IJ20, IJ42
Curl outwards	A set of actuators curl outwards, pressurizing ink in a chamber surrounding the actuators, and expelling ink from a nozzle in the chamber.	♦ Relatively simple construction	♦ Relatively large chip area	♦ IJ43
Iris	Multiple vanes enclose a volume of ink. These simultaneously rotate, reducing the volume between the vanes.	♦ High efficiency ♦ Small chip area	♦ High fabrication complexity ♦ Not suitable for pigmented inks	♦ IJ22

Acoustic vibration	The actuator vibrates at a high frequency.	♦ The actuator can be physically distant from the ink	♦ Large area required for efficient operation at useful frequencies ♦ Acoustic coupling and crosstalk ♦ Complex drive circuitry ♦ Poor control of drop volume and position	♦ 1993 Hadimioglu et al, EUP 550,192 ♦ 1993 Elrod et al, EUP 572,220
None	In various ink jet designs the actuator does not move.	♦ No moving parts	♦ Various other tradeoffs are required to eliminate moving parts	♦ Silverbrook, EP 0771 658 A2 and related patent applications ♦ Tone-jet

Nozzle refill method

Nozzle refill method	Description	Advantages	Disadvantages	Examples
Surface tension	After the actuator is energized, it typically returns rapidly to its normal position. This rapid return sucks in air through the nozzle opening. The ink surface tension at the nozzle then exerts a small force restoring the meniscus to a minimum area.	♦ Fabrication simplicity ♦ Operational simplicity	♦ Low speed ♦ Surface tension force relatively small compared to actuator force ♦ Long refill time usually dominates the total repetition rate	♦ Thermal inkjet ♦ Piezoelectric inkjet ♦ IJ01-IJ07, IJ10-IJ14 ♦ IJ16, IJ20, IJ22-IJ45

Shuttered oscillating ink pressure	Ink to the nozzle chamber is provided at a pressure that oscillates at twice the drop ejection frequency. When a drop is to be ejected, the shutter is opened for 3 half cycles: drop ejection, actuator return, and refill.	♦ High speed ♦ Low actuator energy, as the actuator need only open or close the shutter, instead of ejecting the ink drop	♦ Requires common ink pressure oscillator ♦ May not be suitable for pigmented inks	♦ IJ08, IJ13, IJ15, IJ17 ♦ IJ18, IJ19, IJ21
Refill actuator	After the main actuator has ejected a drop a second (refill) actuator is energized. The refill actuator pushes ink into the nozzle chamber. The refill actuator returns slowly, to prevent its return from emptying the chamber again.	♦ High speed, as the nozzle is actively refilled	♦ Requires two independent actuators per nozzle	♦ IJ09
Positive ink pressure	The ink is held a slight positive pressure. After the ink drop is ejected, the nozzle chamber fills quickly as surface tension and ink pressure both operate to refill the nozzle.	♦ High refill rate, therefore a high drop repetition rate is possible	♦ Surface spill must be prevented ♦ Highly hydrophobic print head surfaces are required	♦ Silverbrook, EP 0771 658 A2 and related patent applications ♦ Alternative for: ♦ IJ01-IJ07, IJ10-IJ14 ♦ IJ16, IJ20, IJ22-IJ45

Method of restricting back-flow through inlet

Inlet back-flow restriction method	Description	Advantages	Disadvantages	Examples

Long inlet channel	The ink inlet channel to the nozzle chamber is made long and relatively narrow, relying on viscous drag to reduce inlet back-flow.	♦ Design simplicity ♦ Operational simplicity ♦ Reduces crosstalk	♦ Restricts refill rate ♦ May result in a relatively large chip area ♦ Only partially effective	♦ Thermal inkjet ♦ Piezoelectric inkjet ♦ IJ42, IJ43
Positive ink pressure	The ink is under a positive pressure, so that in the quiescent state some of the ink drop already protrudes from the nozzle. This reduces the pressure in the nozzle chamber which is required to eject a certain volume of ink. The reduction in chamber pressure results in a reduction in ink pushed out through the inlet.	♦ Drop selection and separation forces can be reduced ♦ Fast refill time	♦ Requires a method (such as a nozzle rim or effective hydrophobizing, or both) to prevent flooding of the ejection surface of the print head.	♦ Silverbrook, EP 0771 658 A2 and related patent applications ♦ Possible operation of the following: ♦ IJ01-IJ07, IJ09- IJ12 ♦ IJ14, IJ16, IJ20, IJ22, ♦ IJ23-IJ34, IJ36- IJ41 ♦ IJ44
Baffle	One or more baffles are placed in the inlet ink flow. When the actuator is energized, the rapid ink movement creates eddies which restrict the flow through the inlet. The slower refill process is unrestricted, and does not result in eddies.	♦ The refill rate is not as restricted as the long inlet method. ♦ Reduces crosstalk	♦ Design complexity ♦ May increase fabrication complexity (e.g. Tektronix hot melt Piezoelectric print heads).	♦ HP Thermal Ink Jet ♦ Tektronix piezoelectric ink jet
Flexible flap restricts inlet	In this method recently disclosed by Canon, the expanding actuator (bubble) pushes on a flexible flap that restricts the inlet.	♦ Significantly reduces back-flow for edge-shooter thermal ink jet devices	♦ Not applicable to most inkjet configurations ♦ Increased fabrication complexity ♦ Inelastic deformation of polymer flap results in creep over extended use	♦ Canon

Inlet filter	A filter is located between the ink inlet and the nozzle chamber. The filter has a multitude of small holes or slots, restricting ink flow. The filter also removes particles which may block the nozzle.	♦ Additional advantage of ink filtration ♦ Ink filter may be fabricated with no additional process steps	♦ Restricts refill rate ♦ May result in complex construction	♦ IJ04, IJ12, IJ24, IJ27 ♦ IJ29, IJ30
Small inlet compared to nozzle	The ink inlet channel to the nozzle chamber has a substantially smaller cross section than that of the nozzle , resulting in easier ink egress out of the nozzle than out of the inlet.	♦ Design simplicity	♦ Restricts refill rate ♦ May result in a relatively large chip area ♦ Only partially effective	♦ IJ02, IJ37, IJ44
Inlet shutter	A secondary actuator controls the position of a shutter, closing off the ink inlet when the main actuator is energized.	♦ Increases speed of the ink-jet print head operation	♦ Requires separate refill actuator and drive circuit	♦ IJ09
The inlet is located behind the ink-pushing surface	The method avoids the problem of inlet back-flow by arranging the ink-pushing surface of the actuator between the inlet and the nozzle.	♦ Back-flow problem is eliminated	♦ Requires careful design to minimize the negative pressure behind the paddle	♦ IJ01, IJ03, IJ05, IJ06 ♦ IJ07, IJ10, IJ11, IJ14 ♦ IJ16, IJ22, IJ23, IJ25 ♦ IJ28, IJ31, IJ32, IJ33 ♦ IJ34, IJ35, IJ36, IJ39 ♦ IJ40, IJ41
Part of the actuator moves to shut off the inlet	The actuator and a wall of the ink chamber are arranged so that the motion of the actuator closes off the inlet.	♦ Significant reductions in back-flow can be achieved ♦ Compact designs possible	♦ Small increase in fabrication complexity	♦ IJ07, IJ20, IJ26, IJ38

Nozzle actuator does not result in ink back-flow	In some configurations of ink jet, there is no expansion or movement of an actuator which may cause ink back-flow through the inlet.	♦ Ink back-flow problem is eliminated	♦ None related to ink back-flow on actuation	♦ Silverbrook, EP 0771 658 A2 and related patent applications ♦ Valve-jet ♦ Tone-jet ♦ IJ08, IJ13, IJ15, IJ17 ♦ IJ18, IJ19, IJ21

Nozzle Clearing Method

Nozzle Clearing method	Description	Advantages	Disadvantages	Examples
Normal nozzle firing	All of the nozzles are fired periodically, before the ink has a chance to dry. When not in use the nozzles are sealed (capped) against air. The nozzle firing is usually performed during a special clearing cycle, after first moving the print head to a cleaning station.	♦ No added complexity on the print head	♦ May not be sufficient to displace dried ink	♦ Most ink jet systems ♦ IJ01- IJ07, IJ09-IJ12 ♦ IJ14, IJ16, IJ20, IJ22 ♦ IJ23- IJ34, IJ36-IJ45
Extra power to ink heater	In systems which heat the ink, but do not boil it under normal situations, nozzle clearing can be achieved by over-powering the heater and boiling ink at the nozzle.	♦ Can be highly effective if the heater is adjacent to the nozzle	♦ Requires higher drive voltage for clearing ♦ May require larger drive transistors	♦ Silverbrook, EP 0771 658 A2 and related patent applications

Rapid succession of actuator pulses	The actuator is fired in rapid succession. In some configurations, this may cause heat build-up at the nozzle which boils the ink, clearing the nozzle. In other situations, it may cause sufficient vibrations to dislodge clogged nozzles.	♦ Does not require extra drive circuits on the print head ♦ Can be readily controlled and initiated by digital logic	♦ Effectiveness depends substantially upon the configuration of the inkjet nozzle	♦ May be used with: ♦ IJ01-IJ07, IJ09- IJ11 ♦ IJ14, IJ16, IJ20, IJ22 ♦ IJ23-IJ25, IJ27-IJ34 ♦ IJ36-IJ45
Extra power to ink pushing actuator	Where an actuator is not normally driven to the limit of its motion, nozzle clearing may be assisted by providing an enhanced drive signal to the actuator.	♦ A simple solution where applicable	♦ Not suitable where there is a hard limit to actuator movement	♦ May be used with: ♦ IJ03, IJ09, IJ16, IJ20 ♦ IJ23, IJ24, IJ25, IJ27 ♦ IJ29, IJ30, IJ31, IJ32 ♦ IJ39, IJ40, IJ41, IJ42 ♦ IJ43, IJ44, IJ45

Acoustic resonance	An ultrasonic wave is applied to the ink chamber. This wave is of an appropriate amplitude and frequency to cause sufficient force at the nozzle to clear blockages. This is easiest to achieve if the ultrasonic wave is at a resonant frequency of the ink cavity.	♦ A high nozzle clearing capability can be achieved ♦ May be implemented at very low cost in systems which already include acoustic actuators	♦ High implementation cost if system does not already include an acoustic actuator	♦ IJ08, IJ13, IJ15, IJ17 ♦ IJ18, IJ19, IJ21
Nozzle clearing plate	A microfabricated plate is pushed against the nozzles. The plate has a post for every nozzle. The array of posts	♦ Can clear severely clogged nozzles	♦ Accurate mechanical alignment is required ♦ Moving parts are required ♦ There is risk of damage to the nozzles ♦ Accurate fabrication is required	♦ Silverbrook, EP 0771 658 A2 and related patent applications
Ink pressure pulse	The pressure of the ink is temporarily increased so that ink streams from all of the nozzles. This may be used in conjunction with actuator energizing.	♦ May be effective where other methods cannot be used	♦ Requires pressure pump or other pressure actuator ♦ Expensive ♦ Wasteful of ink	♦ May be used with all IJ series ink jets
Print head wiper	A flexible 'blade' is wiped across the print head surface. The blade is usually fabricated from a flexible polymer, e.g. rubber or synthetic elastomer.	♦ Effective for planar print head surfaces ♦ Low cost	♦ Difficult to use if print head surface is non-planar or very fragile ♦ Requires mechanical parts ♦ Blade can wear out in high volume print systems	♦ Many ink jet systems

Separate ink boiling heater	A separate heater is provided at the nozzle although the normal drop e-ection mechanism does not require it. The heaters do not require individual drive circuits, as many nozzles can be cleared simultaneously, and no imaging is required.	♦ Can be effective where other nozzle clearing methods cannot be used ♦ Can be implemented at no additional cost in some inkjet configurations	♦ Fabrication complexity	♦ Can be used with many IJ series ink jets

Nozzle plate construction

Nozzle plate construction	Description	Advantages	Disadvantages	Examples
Electroformed nickel	A nozzle plate is separately fabricated from electroformed nickel, and bonded to the print head chip.	♦ Fabrication simplicity	♦ High temperatures and pressures are required to bond nozzle plate ♦ Minimum thickness constraints ♦ Differential thermal expansion	♦ Hewlett Packard Thermal Inkjet
Laser ablated or drilled polymer	Individual nozzle holes are ablated by an intense UV laser in a nozzle plate, which is typically a polymer such as polyimide or polysulphone	♦ No masks required ♦ Can be quite fast ♦ Some control over nozzle profile is possible ♦ Equipment required is relatively low cost	♦ Each hole must be individually formed ♦ Special equipment required ♦ Slow where there are many thousands of nozzles per print head ♦ May produce thin burrs at exit holes	♦ Canon Bubblejet ♦ 1988 Sercel et al., SPIE, Vol. 998 Excimer Beam Applications, pp. 76-83 ♦ 1993 Watanabe et al., USP 5,208,604

Silicon micro-machined	A separate nozzle plate is micromachined from single crystal silicon, and bonded to the print head wafer.	♦ High accuracy is attainable	♦ Two part construction ♦ High cost ♦ Requires precision alignment ♦ Nozzles may be clogged by adhesive	♦ K. Bean, IEEE Transactions on Electron Devices, Vol. ED-25, No. 10, 1978, pp 1185-1195 ♦ Xerox 1990 Hawkins et al., USP 4,899,181
Glass capillaries	Fine glass capillaries are drawn from glass tubing. This method has been used for making individual nozzles, but is difficult to use for bulk manufacturing of print heads with thousands of nozzles.	♦ No expensive equipment required ♦ Simple to make single nozzles	♦ Very small nozzle sizes are difficult to form ♦ Not suited for mass production	♦ 1970 Zoltan USP 3,683,212

Monolithic, surface micro-machined using VLSI lithographic processes	The nozzle plate is deposited as a layer using standard VLSI deposition techniques. Nozzles are etched in the nozzle plate using VLSI lithography and etching.	♦ High accuracy (<1 μm) ♦ Monolithic ♦ Low cost ♦ Existing processes can be used	♦ Requires sacrificial layer under the nozzle plate to form the nozzle chamber ♦ Surface may be fragile to the touch	♦ Silverbrook, EP 0771 658 A2 and related patent applications ♦ IJ01, IJ02, IJ04, IJ11 ♦ IJ12, IJ17, IJ18, IJ20 ♦ IJ22, IJ24, IJ27, IJ28 ♦ IJ29, IJ30, IJ31, IJ32 ♦ IJ33, IJ34, IJ36, IJ37 ♦ IJ38, IJ39, IJ40, IJ41 ♦ IJ42, IJ43, IJ44
Monolithic, etched through substrate	The nozzle plate is a buried etch stop in the wafer. Nozzle chambers are etched in the front of the wafer, and the wafer is thinned from the back side. Nozzles are then etched in the etch stop layer.	♦ High accuracy (<1 μm) ♦ Monolithic ♦ Low cost ♦ No differential expansion	♦ Requires long etch times ♦ Requires a support wafer	♦ IJ03, IJ05, IJ06, IJ07 ♦ IJ08, IJ09, IJ10, IJ13 ♦ IJ14, IJ15, IJ16, IJ19 ♦ IJ21, IJ23, IJ25, IJ26

No nozzle plate	Various methods have been tried to eliminate the nozzles entirely, to prevent nozzle clogging. These include thermal bubble mechanisms and acoustic lens mechanisms	♦ No nozzles to become clogged	♦ Difficult to control drop position accurately ♦ Crosstalk problems	♦ Ricoh 1995 Sekiya et al USP 5,412,413 ♦ 1993 Hadimioglu et al EUP 550,192 ♦ 1993 Elrod et al EUP 572,220
Trough	Each drop ejector has a trough through which a paddle moves. There is no nozzle plate.	♦ Reduced manufacturing complexity ♦ Monolithic	♦ Drop firing direction is sensitive to wicking.	♦ IJ35
Nozzle slit instead of individual nozzles	The elimination of nozzle holes and replacement by a slit encompassing many actuator positions reduces nozzle clogging, but increases crosstalk due to ink surface waves	♦ No nozzles to become clogged	♦ Difficult to control drop position accurately ♦ Crosstalk problems	♦ 1989 Saito et al USP 4,799,068

Drop ejection direction

Ejection direction	**Description**	**Advantages**	**Disadvantages**	**Examples**

Edge. **('edge shooter')**	Ink flow is along the surface of the chip, and ink drops are ejected from the chip edge.	♦ Simple construction ♦ No silicon etching required ♦ Good heat sinking via substrate ♦ Mechanically strong ♦ Ease of chip handing	♦ Nozzles limited to edge ♦ High resolution is difficult ♦ Fast color printing requires one print head per color	♦ Canon Bubblejet 1979 Endo et al GB patent 2,007,162 ♦ Xerox heater-in-pit 1990 Hawkins et al USP 4,899,181 ♦ Tone-jet
Surface **('roof shooter')**	Ink flow is along the surface of the chip, and ink drops are ejected from the chip surface, normal to the plane of the chip.	♦ No bulk silicon etching required ♦ Silicon can make an effective heat sink ♦ Mechanical strength	♦ Maximum ink flow is severely restricted	♦ Hewlett-Packard TIJ 1982 Vaught et al USP 4,490,728 ♦ IJ02, IJ11, IJ12, IJ20 ♦ IJ22
Through chip, forward **('up shooter')**	Ink flow is through the chip, and ink drops are ejected from the front surface of the chip.	♦ High ink flow ♦ Suitable for pagewidth print ♦ High nozzle packing density therefore low manufacturing cost	♦ Requires bulk silicon etching	♦ Silverbrook, EP 0771 658 A2 and related patent applications ♦ IJ04, IJ17, IJ18, IJ24 ♦ IJ27-IJ45

Through chip, reverse ('down shooter')	Ink flow is through the chip, and ink drops are ejected from the rear surface of the chip.	♦ High ink flow ♦ Suitable for pagewidth print ♦ High nozzle packing density therefore low manufacturing cost	♦ Requires wafer thinning ♦ Requires special handling during manufacture	♦ IJ01, IJ03, IJ05, IJ06 ♦ IJ07, IJ08, IJ09, IJ10 ♦ IJ13, IJ14, IJ15, IJ16 ♦ IJ19, IJ21, IJ23, IJ25 ♦ IJ26
Through actuator	Ink flow is through the actuator, which is not fabricated as part of the same substrate as the drive transistors.	♦ Suitable for piezoelectric print heads	♦ Pagewidth print heads require several thousand connections to drive circuits ♦ Cannot be manufactured in standard CMOS fabs ♦ Complex assembly required	♦ Epson Stylus ♦ Tektronix hot melt piezoelectric ink jets

Ink type

Ink type	Description	Advantages	Disadvantages	Examples

Aqueous, dye	Water based ink which typically contains: water, dye, surfactant, humectant, and biocide. Modern ink dyes have high water-fastness, light fastness	♦ Environmentally friendly ♦ No odor	♦ Slow drying ♦ Corrosive ♦ Bleeds on paper ♦ May strikethrough ♦ Cockles paper	♦ Most existing inkjets ♦ All IJ series ink jets ♦ Silverbrook, EP 0771 658 A2 and related patent applications
Aqueous, pigment	Water based ink which typically contains: water, pigment, surfactant, humectant, and biocide. Pigments have an advantage in reduced bleed, wicking and strikethrough.	♦ Environmentally friendly ♦ No odor ♦ Reduced bleed ♦ Reduced wicking ♦ Reduced strikethrough	♦ Slow drying ♦ Corrosive ♦ Pigment may clog nozzles ♦ Pigment may clog actuator mechanisms ♦ Cockles paper	♦ IJ02, IJ04, IJ21, IJ26 ♦ IJ27, IJ30 ♦ Silverbrook, EP 0771 658 A2 and related patent applications ♦ Piezoelectric ink-jets ♦ Thermal ink jets (with significant restrictions)
Methyl Ethyl Ketone (MEK)	MEK is a highly volatile solvent used for industrial printing on difficult surfaces such as aluminum cans.	♦ Very fast drying ♦ Prints on various substrates such as metals and plastics	♦ Odorous ♦ Flammable	♦ All IJ series ink jets

Alcohol (ethanol, 2-butanol, and others)	Alcohol based inks can be used where the printer must operate at temperatures below the freezing point of water. An example of this is in-camera consumer photographic printing.	♦ Fast drying ♦ Operates at sub-freezing temperatures ♦ Reduced paper cockle ♦ Low cost	♦ Slight odor ♦ Flammable	♦ All IJ series ink jets
Phase change (hot melt)	The ink is solid at room temperature, and is melted in the print head before jetting. Hot melt inks are usually wax based, with a melting point around 80 °C. After jetting the ink freezes almost instantly upon contacting the print medium or a transfer roller.	♦ No drying time- ink instantly freezes on the print medium ♦ Almost any print medium can be used ♦ No paper cockle occurs ♦ No wicking occurs ♦ No bleed occurs ♦ No strikethrough occurs	♦ High viscosity ♦ Printed ink typically has a 'waxy' feel ♦ Printed pages may 'block' ♦ Ink temperature may be above the curie point of permanent magnets ♦ Ink heaters consume power ♦ Long warm-up time	♦ Tektronix hot melt piezoelectric ink jets ♦ 1989 Nowak USP 4,820,346 ♦ All IJ series ink jets
Oil	Oil based inks are extensively used in offset printing. They have advantages in improved characteristics on paper (especially no wicking or cockle). Oil soluble dies and pigments are required.	♦ High solubility medium for some dyes ♦ Does not cockle paper ♦ Does not wick through paper	♦ High viscosity: this is a significant limitation for use in inkjets, which usually require a low viscosity. Some short chain and multi-branched oils have a sufficiently low viscosity. ♦ Slow drying	♦ All IJ series ink jets

Ink Jet Printing

[0378] A large number of new forms of ink jet printers have been developed to facilitate alternative ink jet technologies for the image processing and data distribution system. Various combinations of ink jet devices can be included in printer devices incorporated as part of the present invention. Australian Provisional Patent Applications relating to these ink jets which are specifically incorporated by cross reference include:

Australian Provisional Number	Filing Date	Title
PO8066	15-Jul-97	Image Creation Method and Apparatus (IJ01)
PO8072	15-Jul-97	Image Creation Method and Apparatus (IJ02)
PO8040	15-Jul-97	Image Creation Method and Apparatus (IJ03)
PO8071	15-Jul-97	Image Creation Method and Apparatus (IJ04)
PO8047	15-Jul-97	Image Creation Method and Apparatus (IJ05)
PO8035	15-Jul-97	Image Creation Method and Apparatus (IJ06)
PO8044	15-Jul-97	Image Creation Method and Apparatus (IJ07)
PO8063	15-Jul-97	Image Creation Method and Apparatus (IJ08)
PO8057	15-Jul-97	Image Creation Method and Apparatus (IJ09)
P08056	15-Jul-97	Image Creation Method and Apparatus (IJ10)
PO8069	15-Jul-97	Image Creation Method and Apparatus (IJ11)
PO8049	15-Jul-97	Image Creation Method and Apparatus (IJ12)
PO8036	15-Jul-97	Image Creation Method and Apparatus (IJ13)
PO8048	15-Jul-97	Image Creation Method and Apparatus (IJ14)
PO8070	15-Jul-97	Image Creation Method and Apparatus (IJ15)
PO8067	15-Jul-97	Image Creation Method and Apparatus (IJ 16)
PO8001	15-Jul-97	Image Creation Method and Apparatus (IJ17)
PO8038	15-Jul-97	Image Creation Method and Apparatus (IJ18)
PO8033	15-Jul-97	Image Creation Method and Apparatus (IJ 19)
PO8002	15-Jul-97	Image Creation Method and Apparatus (IJ20)
PO8068	15-Jul-97	Image Creation Method and Apparatus (IJ21)
PO8062	15-Jul-97	Image Creation Method and Apparatus (IJ22)
PO8034	15-Jul-97	Image Creation Method and Apparatus (IJ23)
PO8039	15-Jul-97	Image Creation Method and Apparatus (IJ24)
PO8041	15-Jul-97	Image Creation Method and Apparatus (IJ25)
PO8004	15-Jul-97	Image Creation Method and Apparatus (IJ26)
PO8037	15-Jul-97	Image Creation Method and Apparatus (IJ27)
PO8043	15-Jul-97	Image Creation Method and Apparatus (IJ28)
PO8042	15-Jul-97	Image Creation Method and Apparatus (IJ29)
PO8064	15-Jul-97	Image Creation Method and Apparatus (IJ30)
PO9389	23-Sep-97	Image Creation Method and Apparatus (IJ31)
PO9391	23-Sep-97	Image Creation Method and Apparatus (IJ32)
PP0888	12-Dec-97	Image Creation Method and Apparatus (IJ33)

(continued)

Australian Provisional Number	Filing Date	Title
PP0891	12-Dec-97	Image Creation Method and Apparatus (IJ34)
PP0890	12-Dec-97	Image Creation Method and Apparatus (IJ35)
PP0873	12-Dec-97	Image Creation Method and Apparatus (IJ36)
PP0993	12-Dec-97	Image Creation Method and Apparatus (IJ37)
PP0890	12-Dec-97	Image Creation Method and Apparatus (IJ38)
PP1398	19-Jan-98	An Image Creation Method and Apparatus (IJ39)
PP2592	25-Mar-98	An Image Creation Method and Apparatus (IJ40)
PP2593	25-Mar-98	Image Creation Method and Apparatus (IJ41)
PP3991	9-Jun-98	Image Creation Method and Apparatus (IJ42)
PP3987	9-Jun-98	Image Creation Method and Apparatus (IJ43)
PP3985	9-Jun-98	Image Creation Method and Apparatus (IJ44)
PP3983	9-Jun-98	Image Creation Method and Apparatus (IJ45)

Ink Jet Manufacturing

[0379] Further, the present application may utilize advanced semiconductor fabrication techniques in the construction of large arrays of ink jet printers. Suitable manufacturing techniques are described in the following Australian provisional patent specifications incorporated here by cross-reference:

Australian Provisional Number	Filing Date	Title
PO7935	15-Jul-97	A Method of Manufacture of an Image Creation Apparatus (IJM01)
PO7936	15-Jul-97	A Method of Manufacture of an Image Creation Apparatus (IJM02)
PO7937	15-Jul-97	A Method of Manufacture of an Image Creation Apparatus (IJM03)
P08061	15-Jul-97	A Method of Manufacture of an Image Creation Apparatus (IJM04)
P08054	15-Jul-97	A Method of Manufacture of an Image Creation Apparatus (IJM05)
P08065	15-Jul-97	A Method of Manufacture of an Image Creation Apparatus (IJM06)
PO8055	15-Jul-97	A Method of Manufacture of an Image Creation Apparatus (IJM07)
PO8053	15-Jul-97	A Method of Manufacture of an Image Creation Apparatus (IJM08)
PO8078	15-Jul-97	A Method of Manufacture of an Image Creation Apparatus (IJM09)
PO7933	15-Jul-97	A Method of Manufacture of an Image Creation Apparatus (IJM10)
PO7950	15-Jul-97	A Method of Manufacture of an Image Creation Apparatus (IJM11)
PO7949	15-Jul-97	A Method of Manufacture of an Image Creation Apparatus (IJM12)
PO8060	15-Jul-97	A Method of Manufacture of an Image Creation Apparatus (IJM13)
PO8059	15-Jul-97	A Method of Manufacture of an Image Creation Apparatus (IJM14)
P08073	15-Jul-97	A Method of Manufacture of an Image Creation Apparatus (IJM15)
PO8076	15-Jul-97	A Method of Manufacture of an Image Creation Apparatus (IJM16)
P08075	15-Jul-97	A Method of Manufacture of an Image Creation Apparatus (IJM17)
P08079	15-Jul-97	A Method of Manufacture of an Image Creation Apparatus (IJM18)

(continued)

Australian Provisional Number	Filing Date	Title
PO8050	15-Jul-97	A Method of Manufacture of an Image Creation Apparatus (IJM19)
PO8052	15-Jul-97	A Method of Manufacture of an Image Creation Apparatus (IJM20)
PO7948	15-Jul-97	A Method of Manufacture of an Image Creation Apparatus (IJM21)
PO7951	15-Jul-97	A Method of Manufacture of an Image Creation Apparatus (IJM22)
PO8074	15-Jul-97	A Method of Manufacture of an Image Creation Apparatus (IJM23)
PO7941	15-Jul-97	A Method of Manufacture of an Image Creation Apparatus (IJM24)
PO8077	15-Jul-97	A Method of Manufacture of an Image Creation Apparatus (IJM25)
PO8058	15-Jul-97	A Method of Manufacture of an Image Creation Apparatus (IJM26)
PO8051	15-Jul-97	A Method of Manufacture of an Image Creation Apparatus (IJM27)
PO8045	15-Jul-97	A Method of Manufacture of an Image Creation Apparatus (IJM28)
P07952	15-Jul-97	A Method of Manufacture of an Image Creation Apparatus (IJM29)
P08046	15-Jul-97	A Method of Manufacture of an Image Creation Apparatus (IJM30)
P08503	11-Aug-97	A Method of Manufacture of an Image Creation Apparatus (IJM30a)
PO9390	23-Sep-97	A Method of Manufacture of an Image Creation Apparatus (IJM31)
PO9392	23-Sep-97	A Method of Manufacture of an Image Creation Apparatus (IJM32)
PP0889	12-Dec-97	A Method of Manufacture of an Image Creation Apparatus (IJM35)
PP0887	12-Dec-97	A Method of Manufacture of an Image Creation Apparatus (IJM36)
PP0882	12-Dec-97	A Method of Manufacture of an Image Creation Apparatus (IJM37)
PP0874	12-Dec-97	A Method of Manufacture of an Image Creation Apparatus (IJM38)
PP1396	19-Jan-98	A Method of Manufacture of an Image Creation Apparatus (IJM39)
PP2591	25-Mar-98	A Method of Manufacture of an Image Creation Apparatus (IJM41)
PP3989	9-Jun-98	A Method of Manufacture of an Image Creation Apparatus (IJM40)
PP3990	9-Jun-98	A Method of Manufacture of an Image Creation Apparatus (IJM42)
PP3986	9-Jun-98	A Method of Manufacture of an Image Creation Apparatus (IJM43)
PP3984	9-Jun-98	A Method of Manufacture of an Image Creation Apparatus (IJM44)
PP3982	9-Jun-98	A Method of Manufacture of an Image Creation Apparatus (IJM45)

Fluid Supply

[0380] Further, the present application may utilize an ink delivery system to the ink jet head. Delivery systems relating to the supply of ink to a series of ink jet nozzles are described in the following Australian provisional patent specifications, the disclosure of which are hereby incorporated by cross-reference:

Australian Provisional Number	Filing Date	Title
PO8003	15-Jul-97	Supply Method and Apparatus (F1)
PO8005	15-Jul-97	Supply Method and Apparatus (F2)
PO9404	23-Sep-97	A Device and Method (F3)

MEMS Technology

[0381] Further, the present application may utilize advanced semiconductor microelectromechanical techniques in the construction of large arrays of ink jet printers. Suitable microelectromechanical techniques are described in the following Australian provisional patent specifications incorporated here by cross-reference:

Australian Provisional **Number**	**Filing Date**	**Title**
PO7943	15-Jul-97	A device (MEMS01)
PO8006	15-Jul-97	A device (MEMS02)
PO8007	15-Jul-97	A device (MEMS03)
PO8008	15-Jul-97	A device (MEMS04)
PO8010	15-Jul-97	A device (MEMS05)
PO8011	15-Jul-97	A device (MEMS06)
PO7947	15-Jul-97	A device (MEMS07)
PO7945	15-Jul-97	A device (MEMS08)
PO7944	15-Jul-97	A device (MEMS09)
PO7946	15-Jul-97	A device (MEMS10)
PO9393	23-Sep-97	A Device and Method (MEMS11)
PP0875	12-Dec-97	A Device (MEMS12)
PP0894	12-Dec-97	A Device and Method (MEMS13)

IR Technologies

[0382] Further, the present application may include the utilization of a disposable camera system such as those described in the following Australian provisional patent specifications incorporated here by cross-reference:

Australian Provisional Number	**Filing Date**	**Title**
PP0895	12-Dec-97	An Image Creation Method and Apparatus (IR01)
PP0870	12-Dec-97	A Device and Method (IR02)
PP0869	12-Dec-97	A Device and Method (IR04)
PP0887	12-Dec-97	Image Creation Method and Apparatus (IR05)
PP0885	12-Dec-97	An Image Production System (IR06)
PP0884	12-Dec-97	Image Creation Method and Apparatus (IR10)
PP0886	12-Dec-97	Image Creation Method and Apparatus (IR12)
PP0871	12-Dec-97	A Device and Method (IR13)
PP0876	12-Dec-97	An Image Processing Method and Apparatus (IR14)
PP0877	12-Dec-97	A Device and Method (IR16)
PP0878	12-Dec-97	A Device and Method (IR17)
PP0879	12-Dec-97	A Device and Method (IR18)
PP0883	12-Dec-97	A Device and Method (IR19)
PP0880	12-Dec-97	A Device and Method (IR20)
PP0881	12-Dec-97	A Device and Method (IR21)

DotCard Technologies

[0383] Further, the present application may include the utilization of a data distribution system such as that described in the following Australian provisional patent specifications incorporated here by cross-reference:

Australian Provisional Number	Filing Date	Title
PP2370	16-Mar-98	Data Processing Method and Apparatus (Dot01)
PP2371	16-Mar-98	Data Processing Method and Apparatus (Dot02)

Artcam Technologies

[0384] Further, the present application may include the utilization of camera and data processing techniques such as an Artcam type device as described in the following Australian provisional patent specifications incorporated here by cross-reference:

Australian Provisional Number	Filing Date	Title
P07991	15-Jul-97	Image Processing Method and Apparatus (ART01)
PO8505	11-Aug-97	Image Processing Method and Apparatus (ART01a)
PO7988	15-Jul-97	Image Processing Method and Apparatus (ART02)
PO7993	15-Jul-97	Image Processing Method and Apparatus (ART03)
PO8012	15-Jul-97	Image Processing Method and Apparatus (ART05)
PO8017	15-Jul-97	Image Processing Method and Apparatus (ART06)
P08014	15-Jul-97	Media Device (ART07)
PO8025	15-Jul-97	Image Processing Method and Apparatus (ART08)
PO8032	15-Jul-97	Image Processing Method and Apparatus (ART09)
PO7999	15-Jul-97	Image Processing Method and Apparatus (ART10)
P07998	15-Jul-97	Image Processing Method and Apparatus (ART11)
PO8031	15-Jul-97	Image Processing Method and Apparatus (ART12)
P08030	15-Jul-97	Media Device (ART13)
PO8498	11-Aug-97	Image Processing Method and Apparatus (ART14)
PO7997	15-Jul-97	Media Device (ART15)
PO7979	15-Jul-97	Media Device (ART16)
PO8015	15-Jul-97	Media Device (ART17)
PO7978	15-Jul-97	Media Device (ART18)
PO7982	15-Jul-97	Data Processing Method and Apparatus (ART19)
PO7989	15-Jul-97	Data Processing Method and Apparatus (ART20)
PO8019	15-Jul-97	Media Processing Method and Apparatus (ART21)
PO7980	15-Jul-97	Image Processing Method and Apparatus (ART22)
PO7942	15-Jul-97	Image Processing Method and Apparatus (ART23)
PO8018	15-Jul-97	Image Processing Method and Apparatus (ART24)
P07938	15-Jul-97	Image Processing Method and Apparatus (ART25)
PO8016	15-Jul-97	Image Processing Method and Apparatus (ART26)

(continued)

Australian Provisional Number	Filing Date	Title
PO8024	15-Jul-97	Image Processing Method and Apparatus (ART27)
P07940	15-Jul-97	Data Processing Method and Apparatus (ART28)
PO7939	15-Jul-97	Data Processing Method and Apparatus (ART29)
PO8501	11-Aug-97	Image Processing Method and Apparatus (ART30)
P08500	11-Aug-97	Image Processing Method and Apparatus (ART31)
PO7987	15-Jul-97	Data Processing Method and Apparatus (ART32)
P08022	15-Jul-97	Image Processing Method and Apparatus (ART33)
PO8497	11-Aug-97	Image Processing Method and Apparatus (ART30)
PO8029	15-Jul-97	Sensor Creation Method and Apparatus (ART36)
P07985	15-Jul-97	Data Processing Method and Apparatus (ART37)
PO8020	15-Jul-97	Data Processing Method and Apparatus (ART38)
P08023	15-Jul-97	Data Processing Method and Apparatus (ART39)
P09395	23-Sep-97	Data Processing Method and Apparatus (ART4)
P08021	15-Jul-97	Data Processing Method and Apparatus (ART40)
PO8504	11-Aug-97	Image Processing Method and Apparatus (ART42)
PO8000	15-Jul-97	Data Processing Method and Apparatus (ART43)
PO7977	15-Jul-97	Data Processing Method and Apparatus (ART44)
PO7934	15-Jul-97	Data Processing Method and Apparatus (ART45)
PO7990	15-Jul-97	Data Processing Method and Apparatus (ART46)
PO8499	11-Aug-97	Image Processing Method and Apparatus (ART47)
PO8502	11-Aug-97	Image Processing Method and Apparatus (ART48)
P07981	15-Jul-97	Data Processing Method and Apparatus (ART50)
PO7986	15-Jul-97	Data Processing Method and Apparatus (ART51)
PO7983	15-Jul-97	Data Processing Method and Apparatus (ART52)
PO8026	15-Jul-97	Image Processing Method and Apparatus (ART53)
PO8027	15-Jul-97	Image Processing Method and Apparatus (ART54)
PO8028	15-Jul-97	Image Processing Method and Apparatus (ARTS6)
PO9394	23-Sep-97	Image Processing Method and Apparatus (ART57)
P09396	23-Sep-97	Data Processing Method and Apparatus (ART58)
PO9397	23-Sep-97	Data Processing Method and Apparatus (ART59)
PO9398	23-Sep-97	Data Processing Method and Apparatus (ART60)
PO9399	23-Sep-97	Data Processing Method and Apparatus (ART61)
PO9400	23-Sep-97	Data Processing Method and Apparatus (ART62)
P09401	23-Sep-97	Data Processing Method and Apparatus (ART63)
PO9402	23-Sep-97	Data Processing Method and Apparatus (ART64)
PO9403	23-Sep-97	Data Processing Method and Apparatus (ART65)
P09405	23-Sep-97	Data Processing Method and Apparatus (ART66)

(continued)

Australian Provisional Number	Filing Date	Title
PP0959	16-Dec-97	A Data Processing Method and Apparatus (ART68)
PP1397	19-Jan-98	A Media Device (ART69)

[0385] It would be appreciated by a person skilled in the art that numerous variations and/or modifications may be made to the present invention as shown in the specific embodiment without departing from the spirit or scope of the invention as broadly described. The present embodiment is, therefore, to be considered in all respects to be illustrative and not restrictive.

[0386] Related aspects and embodiments of the invention are set out below in the following numbered paragraphs:

1. An ink jet printer having a series of ink ejection nozzles, said printer further comprising:

   an internal selective actuator mechanism activate on a nozzle by nozzle basis by the placement of a field around said nozzles.

2. An inkjet printing nozzle arrangement comprising:

   (a) a nozzle chamber having an ink ejection port at one end;
   (b) a plunger constructed from soft magnetic material and positioned between said nozzle chamber and an ink chamber, said ink chamber allowing for the supply of ink to said nozzle chamber;
   (c) an electric coil located adjacent to the plunger and electrically connected to a nozzle activation signal wherein upon activation of the activation signal, said plunger is caused by said coil to move from an ink loaded position to an ink ejection position thereby causing the ejection of ink from said ink ejection port.

3. An ink ejection nozzle arrangement as described in paragraph 2 further comprising an armature plate constructed from soft magnetic material and wherein said plunger is attracted to said armature plate on the activation of said coil.

4. An ink jet printing nozzle arrangement as described in paragraph 2 wherein said electric coil is located within a cavity defined by a said plunger and wherein said cavity has its dimensions reduced as a result of movement of said plunger, said plunger further having a series of fluid release slots in fluid communication with said cavity and said ink chamber, said fluid release slots allowing for the expulsion of fluid under pressure in said cavity.

5. An inkjet printing nozzle arrangement as described in paragraph 2 further comprising a resilient means for assisting in the return of said plunger from said ink ejection position to said ink loaded position after the ejection of ink from said ink ejection port.

6. An ink jet printing nozzle arrangement as described in paragraph 5 wherein said resilient means comprises a torsional spring.

7. An ink jet printing nozzle arrangement as described in paragraph 6 wherein said torsional spring is of an arcuate construction having a circumferential profile substantially the same as that of said plunger.

8. An inkjet printing nozzle arrangement comprising:

   (a) a nozzle chamber having an ink ejection slot at one end;
   (b) a plunger constructed from soft magnetic material positioned between said nozzle chamber and an ink chamber supplying ink to said nozzle chamber;
   (c) an electric coil located adjacent to the plunger and electrically connected to a nozzle activation signal; wherein said electric coil is located within a cavity defined by a said plunger, said plunger having along one surface a series of slots, said cavity having its dimensions reduced as result of movement of said plunger, said reduction in dimensions resulting in an ink flow through said slots into said nozzle chamber and thereby assisting in the ejection of ink from said ink ejection port.

9. An ink jet printing nozzle as described in paragraph 8 wherein said slots are defined around an inner circumference of said coil and said slots have a substantially constant cross-sectional profile.

10. A nozzle as described in Paragraph 7 wherein said slots are located in a radial manner on one surface of said plunger.

11. An ink jet nozzle comprising:

a nozzle chamber having an ink ejection port in one wall of said chamber;
an ink supply source interconnected to said nozzle chamber;
an electrostatic actuator comprising a first planar electrode formed within a bottom substrate of a nozzle chamber and a moveable second planar electrode arranged above the first planar electrode, said second planar electrode being moveable to a pre-firing position adjacent to said first planar electrode, upon forming a potential difference across said electrodes, thereby causing a corrugated border portion of said second electrode to concertina, such that, upon reduction of said potential difference, said corrugated border returns to its quiescent position, thereby causing the ejection of ink from said nozzle chamber.

12. An ink jet nozzle comprising:

a nozzle chamber having an ink ejection port in one wall of said chamber;
an ink supply source interconnected to said nozzle chamber;
an electrostatic actuator to eject ink from said nozzle chamber via said ink ejection port, said electrostatic actuator comprising a first planar electrode formed within a bottom substrate of a nozzle chamber and a moveable second planar electrode arranged above the first planar electrode, said ink jet nozzle arrangement being formed from depositing and
etching of material on a single monolithic wafer.

13. An ink jet nozzle as described in paragraph 11 wherein between said first planar electrode and said second planar electrode is an air gap interconnected to an external atmosphere at a side of said nozzle chamber such that air flows into and out of said gap upon movement of said actuator.

14. An ink jet nozzle as described in paragraph 11 wherein the surface of said electrodes facing an opposing electrode are coated with a material having a low coefficient of friction so as to reduce the possibilities of stiction.

15. An inkjet nozzle as described in paragraph 14 wherein said material comprises substantially polytetrafluoroethylene.

16. An ink jet nozzle as described in paragraph 11 wherein said second planar electrode includes a layer of stiffening material for maintaining the stiffness of said second planar electrode.

17. An ink jet nozzle as described in paragraph 16 wherein said stiffening material comprises substantially nitride.

18. An inkjet nozzle as described in paragraph 13 wherein said gap is formed by utilisation of a sacrificial material layer which is etched away to release said second planar electrode structure.

19. An ink jet nozzle as described in paragraph 11 wherein an outer surface of said ink chamber includes a plurality of etchant holes provided so as to allow a more rapid etching of sacrificial layers during construction.

20. In an inkjet nozzle comprising:

a nozzle chamber having an ink ejection port in one wall of said chamber;
an ink supply source interconnected to said nozzle chamber;
an electrostatic actuator to eject ink from said nozzle chamber via said ink ej ection port, said electrostatic actuator comprising a series of conductive parallel plates interleaved with a resiliently compressible material;
a method comprising the steps of: producing a potential difference across said plates so as to attract adjacent plates to one another thereby causing said compressible material to resiliently yield; reducing said potential difference such that said compressible material returns to its quiescent state, thereby resulting in the ejection of ink from said ejection port.

21. A method as described in paragraph 20 wherein said resilient yielding of said compressible material results in ink being drawn into said nozzle chamber by means of surface tension effects around said ink ejection port.

22. An inkjet nozzle comprising:

a nozzle chamber having and ink ejection port in one wall of said chamber;
an ink supply source interconnected to said nozzle chamber;
an electrostatic actuator to eject ink from said nozzle chamber via said ink ejection port, said electrostatic actuator comprising a series of conductive parallel plates interleaved with a resiliently compressible material;
control means for producing a potential difference across said plates so that said material is resiliently compressed such that, upon deactivation, said electrostatic actuator causes ink to be ejected via said ink ejection port.

23. An ink jet nozzle as described in paragraph 20 wherein said compressible material comprises a material having a high dielectric constant.

24. An ink jet nozzle as described in paragraph 20 wherein said electrostatic actuator is constructed utilising semiconductor fabrication techniques by laying down one planer layer at a time so as to form an initial sandwiched preform and subsequently selectively etching said preform so as to provide for an electrical interconnect to the conductive parallel plates.

25. An inkjet nozzle as described in paragraph 20 wherein groups of said series of said conductive parallel plates are constructed from different materials so as to allow for selective etching of said plates so as to divide them into two groups of different polarities during operation.

26. An ink jet nozzle as described in paragraph 25 wherein plates from each of said group are interconnected to a common conductive portion for the provision of a charge to said conductive plates.

27. An inkjet nozzle as described in paragraph 20 wherein said plates are constructed utilising chemical vapour deposition techniques.

28. An ink jet nozzle as described in paragraph 20 wherein an outer surface of said nozzle chambers includes a plurality of etchant holes provided so as to allow a more rapid etching of sacrificial layers during construction.

29. A method of ejecting ink from an inkjet printing nozzle apparatus, the apparatus comprising:

(a) a nozzle chamber having an ink ejection port and being in fluid connection with an ink chamber;
(b) an ink ejection means having one surface in fluid communication with ink in said nozzle chamber;
(c) a recoil means connected to said ink ejection means;
(d) a first actuator means connected to the ink ejection means; wherein said method comprises the step of:

activation of the first actuator means which drives said ink ej ection means from a quiescent position to a pre-firing position;
deactivation of said first actuator means, said deactivation causing said recoil means to drive said ink ejection means to eject ink from said nozzle chamber via said ink ejection port.

30. A method as described at paragraph 29 wherein said recoil means includes a resilient member and said movement of the first actuator means results in resilient movement of said recoil means and said driving of the ink ejection means comprises the resilient member acting upon said ink ejection means.

31. A method as described in paragraph 29 wherein said first actuator means comprises an electromagnetic actuator.

32. A method as described in paragraph 29 wherein said recoil means comprises a torsional spring.

33. A method as described in paragraph 29 'wherein said ink ejection means and said first actuator means are interconnected in a cantileverarrangement wherein small movements of said first actuator means result in larger movements of the said ink ejectionmeans.

34. A method as described in paragraph 33 wherein said recoil means is located substantially at the pivot point of said cantilever.

35. A method as described in paragraph 31 wherein said first actuator includes a solenoid coil surrounded by a magnetic actuator having a first fixed magnetic pole and a second moveable magnetic pole, such that, upon activation of said coil, said poles undergo movement relative to one another.

36. A method as described in paragraph 35 wherein said moveable magnetic pole includes a plurality of slots for the flow of ink through said pole upon movement of said moveable pole.

37. A method as described in paragraph 29 wherein said ink ejection means comprises a piston or plunger having a surface substantially mating with at least one surface of the nozzle chamber.

38. An ink jet nozzle arrangement having an ink ejection port for the ejection of ink said nozzle comprising:

a nozzle chamber interconnected to said ink ejection port and having one moveable wall including an electromagnetic coil; said nozzle chamber being in a magnetic field such that, upon activation of said electromagnetic coil, said moveable wall experiences a lorenz force and is caused to move so as to result in the ejection of ink from said nozzle chamber via said ink ejection port.

39. An ink jet nozzle arrangement as described in paragraph 38 wherein said moveable wall is caused to pivot upon activation.

40. An inkjet nozzle arrangement as described in any of paragraphs 38 to 39 wherein said moveable wall interconnects said nozzle chamber with an ink supply chamber and said nozzle chamber is refilled from said ink supply chamber upon said ejection of ink.

41. An inkjet nozzle arrangement as described in any of paragraphs 38 to 40 wherein said moveable wall is interconnected to said nozzle chamber wall by a resilient means.

42. An inkjet nozzle arrangement as described in paragraph 41 wherein said resilient means acts to return said moveable wall to a quiescent position upon deactivation of said electromagnetic coil.

43. An inkjet nozzle arrangement as described in any of paragraphs 38 to 42 wherein said electromagnetic coil includes multiple layers.

44. An ink jet nozzle arrangement as described in any of paragraphs 38 to 43 wherein said electromagnetic coil comprises substantially copper.

45. An ink jet nozzle arrangement as described in any of paragraphs 38 to 44 wherein said magnetic field is permanent.

46. An ink jet nozzle arrangement as described in paragraph 45 wherein said magnetic field is provided by neodymium iron boron magnets.

47. An ink jet printing nozzle apparatus comprising:

a nozzle chamber in fluid communication with an ink chamber and utilized for the storage of ink to be printed out by said nozzle apparatus, said nozzle chamber having a nozzle chamber outlet hole for the ejection of ink from said nozzle chamber;
a magnetic piston located over an aperture in said nozzle chamber; and
an activation coil located adjacent to said magnetic piston, said coil upon activation by a current applying a force to said piston sufficient to cause movement of said piston from a first position to a second position, said movement causing ink within said nozzle chamber to be ejected from said nozzle chamber through a nozzle chamber outlet hole onto print media.

48. An ink jet printing nozzle apparatus as described in paragraph 47 further comprising a series of resilient means attached to said magnetic piston so as to return said magnetic piston to said first position upon deactivation of

said activation coil.

49. A inkjet nozzle apparatus as described in paragraph 48 wherein said resilient means comprises at least one torsional spring.

50. An ink jet nozzle apparatus as described in paragraph 47 wherein said apparatus is constructed utilizing semi-conductor fabrication techniques;

51. An ink jet nozzle apparatus as described in paragraph 47 wherein said piston and/or said coils are constructed from a dual damascene process.

52. A inkjet printing nozzle apparatus as described in paragraph 47 wherein said nozzle chamber outlet hole includes a nozzle rim adapted to reduce hydrophilic surface spreading of said ink.

53. An inkjet printing nozzle apparatus as described in paragraph 47 wherein said activation coil is constructed from a copper deposition process.

54. An ink jet printing nozzle apparatus as described in paragraph 47 wherein said magnetic piston is constructed from a rare earth magnetic material.

55. An ink jet printing nozzle apparatus as described in paragraph 48 wherein said resilient means constructed from silicon nitride.

56. An ink jet nozzle comprising:

an ink reservoir containing an ink supply under a fluctuating pressure;
a nozzle chamber having an ink ejection port for the ejection of ink drops onto a print media; and
a shutter means interconnecting said reservoir and said nozzle chamber, said shutter means being operable by means of electromagnetic actuation so as to control the ejection of ink from said ink ejection port.

57. An inkjet print nozzle as described in paragraph 56 wherein said electromagnetic actuation comprises activating an electromagnet so as to move an arm interconnected to at least one end of said shutter means, thereby opening a channel for the flow of ink, followed by maintaining a lower keeper current so as to maintain said channel in an open state, followed by deactivation of said electromagnet, said shutter subsequently returning to a closed position.

58. An inkjet nozzle as described in paragraph 56 wherein said electromagnet includes a first and second end and wherein each of said ends are positioned closely adjacent to said arm and said electromagnetic actuation includes movement of said arm closer to both of said ends.

59. An inkjet print nozzle as described in paragraph 56 wherein said arm is pivoted between said first and second end of said electromagnet.

60. An ink jet print nozzle as described in any of paragraphs 56 to 59 wherein the electromagnet has a spiral shape.

61. An ink jet print nozzle as described in any of paragraphs 56 to 60 further comprising:

a resilient means connected to said shutter means, said resilient means being elastically deformed by said electromagnetic actuation and said resilient means operating to return to an initial state upon deactivation of said shutter means so as to restrict the further flow of fluid from said ink reservoir to said nozzle chamber.

62. An ink jet print nozzle as described in paragraph 58 wherein said resilient means comprises a coiled spring.

63. An ink jet print nozzle as described in any of paragraphs 56 to 62 wherein said electromagnet is formed utilizing semi-conductor fabrication techniques from a copper coil surrounding a soft metal core.

64. An ink jet print nozzle as described in paragraph 63 wherein said copper coil is formed from utilizing a damascene process.

65. An ink jet nozzle as described in any of paragraphs 56 to 64 wherein said shutter means comprises a series of moveable slats moveable over an aperture in the wall of said nozzle chamber.

66. A method of ejecting ink from an ink jet print nozzle having a fluctuating ink pressure supply comprising:

utilizing an electromagnetically activated shutter to control the flow of ink into a nozzle chamber such that ink is ejected from said nozzle chamber when said shutter is open;
utilizing a first high pressure cycle of said oscillating pressure ink supply to eject ink from said nozzle chamber;
utilizing a low pressure cycle of said oscillating pressure ink supply for the separation of an ink drop from the ink in said nozzle chamber;
utilizing a second high pressure cycle of said oscillating pressure ink supply to refill said nozzle chamber with ink.

67. An inkjet nozzle arrangement comprising:

a nozzle chamber having an ink ejection port for the ejection of ink from the nozzle chamber;
an ink supply reservoir for supplying ink to said nozzle chamber;
a magnetic actuator located between said nozzle chamber and said ink supply reservoir which is actuated to eject ink by means of externally supplied magnetic pulse cycles;

68. An ink jet nozzle arrangement as described in paragraph 67 wherein said nozzle arrangement is formed as part of an array of nozzles and each of said nozzles further comprises a blocking means for blocking movement of said magnetic actuator for those nozzles of which it is desired not to eject ink from said nozzle chambers in a current magnetic pulse cycle.

69. An ink jet nozzle arrangement as described in paragraph 68 wherein said blocking means comprises a thermal actuator having a moveable end protuberance which is moveable to a position blocking the path of movement of said magnetic actuator.

70. An ink jet nozzle arrangement as described in any of paragraphs 67 to 69 wherein said magnetic actuator includes an end protuberance designed to engage said blocking means upon movement of said actuator.

71. An inkjet nozzle arrangement as described in any of paragraphs 67 to 70 wherein said magnetic actuator is affixed to an adjacent wall of said nozzle chamber by means of two bendable strip portions which allow bending movement of said magnetic actuator upon activation by said externally supplied magnetic pulse cycles.

72. An ink jet nozzle arrangement as described in paragraph 69 wherein said thermal actuator comprises substantially two arms affixed to a substrate, a first arm having a thin serpentine structure encased in a material having a high coefficient of thermal expansion and a second arm comprising a thicker arm having a tapered thin portion near the end connecting to said substrate so as to concentrate any bending of said actuator at a point close to said substrate.

73. An ink jet nozzle arrangement as described in any of paragraphs 67 to 72 wherein said blocking means is located in a cavity having a low degree of fluid flow through the cavity.

74. An ink jet nozzle arrangement as described in paragraph 72 wherein said blocking means is located in a cavity having a low degree of fluid flow through the cavity and the serpentine arm is located alongside an inner wall of said cavity.

75. An ink jet nozzle arrangement as described in any of paragraphs 67 to 74 wherein the nozzle is constructed via fabrication of a silicon wafer utilizing semiconductor fabrication techniques.

76. An ink jet nozzle arrangement as described in any of paragraphs 67 to 75 wherein portions of said actuators include a silicon nitride covering as required so as to insulate and passivate them from adjacent portions.

77. An inkjet nozzle arrangement as described in any of paragraphs 67 to 76 wherein said nozzle chamber is formed from high density low pressure plasma etching of a silicon substrate.

78. An ink jet nozzle arrangement comprising:

(a) a nozzle chamber having an ink injection port at one wall of said chamber;
(b) a fixed electric coil located within the chamber or within a wall of said chamber;
(c) a moveable plate, in which embedded is an electric coil, located close to set fixed electric coil such that when the amount of current passing through set coils are altered, the movable plate undergoes corresponding movement towards or away from said fixed electric coil and wherein said movement is utilized to inject ink from said nozzle chamber via said ink injection port.

79. An ink jet nozzle arrangement as described in paragraph 78 further comprising:

spring means connected to said moveable plate wherein said moveable plate goes from a quiescent position to a spring loaded position upon activation of said coils and upon deactivation of said coils said spring means causes said moveable coil to return to its quiescent position and to thereby eject ink from said ink ejection port.

80. An inkjet nozzle arrangement as described in any of paragraphs 78 to 79 wherein said fixed electric coil of said moveable plunger plate comprises a stacked multi level spiral of conductive material.

81. An ink jet nozzle arrangement as described in paragraph 80 wherein said stacked conductive material is interconnected at a central axial point of said spiral.

82. An inkjet nozzle arrangement as described in any of paragraphs 78 to 81 wherein said coils are electrically connected together to form a combined circuit.

83. An inkjet nozzle arrangement as described in claim 79 wherein said spring means comprises torsional springs attached to said moveable coil.

84. An ink jet nozzle arrangement as described in claim 83 wherein a conductive strip contact to said coils is located within said torsional springs.

85. An inkjet nozzle arrangement as described in any previous paragraph wherein said coil comprises substantially copper.

86. An ink jet nozzle arrangement as described in any of paragraphs 78 to 85 wherein said coils are formed from utilization of a damascene construction process.

87. An ink jet nozzle arrangement as described in any of paragraphs 78 to 86 wherein said nozzle is constructed utilizing a sacrificial etch to release the structure of said moveable coil.

88. An ink jet nozzle arrangement as described in any of paragraphs 78 to 87 wherein said nozzle chamber includes a series of slots within the walls of said nozzle chamber so as to allow the supply of ink to said nozzle chamber.

89. An inkjet nozzle arrangement as described in paragraph 87 wherein an outer surface of said nozzle chamber includes a series of small etched holes for the etching of any sacrificial layer utilized in the construction of said ink jet print nozzle.

90. A means of ejecting ink from a nozzle chamber utilizing the electro-magnetic forces between two coils embedded into place to cause movement of at least one of said plates, the movement further causing the consequential ejection of ink from said nozzle chamber.

91. A method of ejecting ink as described in paragraph 86 wherein said utilization of electro-magnetic forces comprises using the electro-magnetic forces between coils embedded into a moveable and a fixed plate so that said moveable plate moves closer to said fixed plate, said moveable plate further being connected to a spring which upon said movement, stores energy within said spring such as that upon deactivation of a current through said coil, said spring releases its stored energy to thereby cause the movement of said moveable plate so as to cause the ejection of ink from said nozzle.

92. An inkjet nozzle arrangement comprising:

a nozzle chamber having an ink ejection port for the ejection of ink from the nozzle chamber;
an ink supply reservoir for supplying ink to said nozzle chamber;
a plunger located within said nozzle chamber; and
a linear stepper actuator interconnected to said plunger and adapted to activate said plunger so as to cause the ejection
of ink from said ink ejection port.

93. An ink jet nozzle arrangement as described in paragraph 92 wherein said plunger has a hydrophobic surface located alongside at least one wall of said nozzle chamber.

94. An ink jet nozzle arrangement as described in any of paragraphs 92 to 93 wherein said linear actuator is driven in three phases by a series of electromagnets.

95. An inkjet nozzle arrangement as described in paragraph 94 wherein said electromagnets are duplicated for each phase.

96. An inkjet nozzle arrangement as described in paragraph 96 wherein there are four electromagnets for each phase.

97. An ink jet nozzle arrangement as described in paragraphs 94 to 96 wherein said electromagnets are arranged in opposing pairs.

98. An ink jet nozzle arrangement as described in any of paragraphs 92 to 97 wherein said nozzle chamber has an open wall along a back surface of said plunger.

99. An ink jet nozzle arrangement as described in any of paragraphs 92 to 98 wherein said nozzle chamber comprises a series of posts adapted to form a filter to filter ink flowing into said nozzle chamber.

100. An ink jet nozzle arrangement as described in any of paragraphs 92 to 99 wherein said linear stepper actuator includes a guide at an end opposite said nozzle chamber for guiding the linear actuator.

101. An inkjet nozzle comprising:

a nozzle chamber having an ink ejection port for the ejection of ink from the nozzle chamber;
an ink supply reservoir for supplying ink to said nozzle chamber;
a shutter for opening and closing a fluid passage between the reservoir and chamber so as to cause the ejection of ink from said ink ejection port;

wherein said shutter includes a ratcheted edge for dividing the shutter to an open or closed position via the utilisation of an actuator driven driving means.

102. An inkjet nozzle as described in paragraph 101 wherein said driving means includes a gearing means interconnected to a driving means wherein said gearing means results in a reduced driving frequency of said ratcheted edge relative to the frequency of operation of said driving means.

103. An inkjet nozzle as described in any of paragraphs 101 to 102 wherein said driving means includes utilising a conductive element in a magnetic field to exert a force on said ratcheted edge.

104. An inkjet nozzle as described in paragraph 102 wherein said driving means includes utilising a conductive element in a magnetic field to exert a force on a cog of a gearing mechanism with said gearing mechanism utilised to transfer the force on said ratcheted edge.

105. An inkjet nozzle as described in paragraph 103 wherein said conductive element includes a concertinaed structure designed to expand or contract upon movementofsaid conductive element.

106. An ink jet nozzle as described in any preceding paragraph wherein said shutter mechanism includes a series of slots having corresponding retainers utilised in guiding the shutter between said reservoir and said nozzle chamber.

107. An ink nozzle as described in any preceding paragraph wherein said shutter is formed through the fabrication of an array of nozzles on a silicon wafer structure.

108. An inkjet nozzle as described in paragraph 101 wherein the ink within said ink supply reservoir is driven with an oscillating ink pressure.

109. An inkjet nozzle arrangement comprising:

a nozzle chamber having an ink ejection port for the ejection of ink from the nozzle chamber;
an ink supply reservoir for supplying ink to said nozzle chamber;
a tapered magnetic plunger located between said nozzle chamber and said ink supply reservoir and surrounded by an electromagnetic device such that upon activation of said device, said magnetic plunger is forced towards to said ink ejection port to thereby cause the ejection of ink from said ink ejection port.

110. An inkjet nozzle arrangement as described in paragraph 109 wherein said plunger is substantially circular and has a tapered rim adjacent portions of said electromagnetic device.

111. An inkjet nozzle arrangement as described in any of paragraphs 109 to 110 wherein said electromagnetic device is of a torus shape and said plunger is located in the center of said torus.

112. An inkjet nozzle arrangement as described in any of paragraphs 109 to 111 wherein said plunger is further connected t

(c) a shutter device located between said ink reservoir and said ink chamber so as to allow or restrict the flow of ink between the ink chamber and ink reservoir to thereby cause the ejection of ink from said chamber, said shutter device being actuated on demand.

118. A shuttered ink jet nozzle as described in paragraph 117 when said actuator comprises an electromagnetic coil mechanism attracting a magnetic bar.

119. A shuttered ink jet nozzle as described in paragraph 118 wherein said coil is anchored to a wafer and said magnetic bar is connected to a shutter plate adapted to open and close over a series of shutter holes allowing fluid communication between said ink reservoir and said ink chamber.

120. A shuttered ink jet nozzle as described in paragraph 118 wherein said actuator includes at least one linear spring so as to amplify the travel of a shutter plate covering shutter holes upon activation of said actuator.

121. A shuttered ink jet nozzle as described in paragraph 120 wherein said linear spring is anchored on one side of said ink chamber and said electromagnetic coil is anchored to an opposite side of said ink chamber with a shutter plate operable between said linear spring anchor and said electromagnetic anchor.

122. A shuttered ink jet nozzle as described in any of paragraphs 117 to 121 wherein said ink reservoir includes ink under an oscillating ink pressure.

123. A shuttered ink jet nozzle as described in paragraph 117 wherein said shuttered device comprises a plurality of shutter plates covering a corresponding plurality of shutter holes allowing the flow of ink between said ink chamber and said ink reservoir.

124. A shuttered ink jet nozzle as described in paragraph 117 wherein said ink chamber is formed by a crystallographic etch of a silicon wafer.

125. A shuttered ink jet nozzle as described in paragraph 122 wherein the ejection frequency of drops from said nozzle is substantially half the frequency of an oscillating pressure of said ink within said ink reservoir.

126. An array ofinkjet nozzles with each nozzle as described in any of paragraphs 116 to 125 wherein the nozzles are grouped into phase groups and each phase group is activated in turn so as to reduce pressure requirements in an inkjet reservoir.

127. A method of operation of a shuttered ink jet print nozzle having a nozzle chamber and ink reservoir, the ink reservoir having an oscillating ink pressure, comprising opening the shutter to cause ink to be ejected from the nozzle chamber resulting in a reduction of ink in said nozzle chamber followed by leaving the shutter open during a subsequent high pressure of said ink pressure so as to allow said nozzle chamber to refill, followed by closing said shutter at the end of a high pressure cycle so as to restrict back flow of ink from said nozzle chamber to said ink reservoir.

128. An inkjet nozzle arrangement comprising:

(a) an ink ejection chamber having an ejection port for the ejection of ink, said chamber being in fluid communication with an ink reservoir for the supply of ink to be ejected; and
(b) at least one wall of said chamber comprising a moveable diaphragm actuated by means of a Lorenz force so as to cause the consequential ejection of ink from said ink ejection chamber.

129. An inkjet nozzle arrangement as described in paragraph 128 wherein said diaphragm includes an embedded conductive coil.

130. An ink jet nozzle arrangement as described in paragraph 128 wherein said diaphragm is of a corrugated or concertinaed form.

131. An inkjet nozzle arrangement as described in paragraph 130 wherein said diaphragm is expandable upon actuation.

132. An inkjet nozzle arrangement as described in paragraph 131 wherein said diaphragm undergoes expansion by concertinaing

133. An inkjet nozzle arrangement as described in paragraph 130 where in said diaphragm is formed through utilization of a half-toned mask.

134. An inkjet nozzle arrangement as described in any proceeding paragraph wherein said chamber is formed by means of an anisotropic etch of a silicon wafer.

135. A method of ejecting ink from a chamber comprising utilization of the phase transformation of a magnetostrictive material in a magnetic field as an actuator to cause the ejection of ink from the chamber.

136. A method is as described in paragraph 135 when said actuator comprises a magnetostrictive paddle in a quiescent state and which transfers to an ink ejection state upon the application of a magnetic field thereby causing ink ejection from the chamber.

137. A method as described in paragraph 136 when said magnetic field is applied by means of passing a current through a conductive coil adjacent said magnetostrictive material.

138. A method as described in a preceding paragraph when said chamber is formed from a crystallographic etch of a silicon wafer so as to have one surface of a said chamber substantially formed by said actuator.

139. A method as described 1 wherein said actuator is attached to one wall of said chamber opposite a nozzle port from which ink is ejected.

140. A method as described in paragraph 135 wherein said nozzle port is formed by the back etching of a silicon wafer to the epitaxial layer and etching a nozzle port hole in said epitaxial layer.

141. A method is as described in paragraph 138 wherein said crystallographic etch includes providing side wall slots of non-etched layers of a processed silicon wafer so as to extend the dimensions of the chamber as a result of the crystallographic etch process.

142. A method as described in any of paragraphs 135 to 141 wherein said shape memory alloy comprises substantially Terfenol-D.

143. An inkjet nozzle arrangement comprising:

a nozzle chamber having an ink ejection port in one wall of said chamber;
an ink supply source interconnected to said nozzle chamber;
a magnetostrictive actuator to eject ink from said nozzle chamber via said ink ejection port;
a magnetic field actuation means for producing a magnetic field around said magnetostrictive actuator so as to cause magnetostrictive operation of said actuator thereby causing said actuator to eject ink from said ink ejection port.

144. An inkjet nozzle as described in paragraph 143 wherein said magnetic field actuation means comprises a conductive coil surrounding said magnetostrictive actuator.

145. An inkjet nozzle as described in paragraph 144 wherein said nozzle is formed on a silicon wafer utilizing semiconductor processing techniques and said conductive coil is interconnected to a lower metal layer which provides control circuitry for said ink jet printer.

146. A method of ejecting ink from a chamber comprising utilization of the transformation of a shape memory alloy from its martensitic phase to its austenitic phase as an actuator to cause the ejection of ink from the said chamber.

147. A method is as described in paragraph 146 when said actuator comprises a conductive shape memory alloy paddle in a quiescent state and which transfers to an ink ejection state upon heating thereby causing ink ejection from the chamber.

148. A method as described in paragraph 147 when said heating occurs by means of passing a current through said shape memory alloy.

149. A method as described in a preceding paragraph when said chamber is formed from a crystallographic etch of a silicon wafer so as to have one surface of a said chamber substantially formed by said actuator.

150. A method as described in any of paragraphs 146 to 149 wherein said actuator is formed from a conductive shape memory alloy arranged in a serpentine form.

151. A method as described in paragraph 146 wherein said actuator is attached to one wall of said chamber opposite a nozzle port from which ink is ejected.

152. A method as described in paragraph 146 wherein said nozzle port is formed by the back etching of a silicon wafer to the epitaxial layer and etching a nozzle port hole in said epitaxial layer.

153. A method is as described in paragraph 149 wherein said crystallographic etch includes providing side wall slots of non-etched layers of a processed silicon wafer so as to the extend the dimensions of the chamber as a result of the crystallographic etch process.

154. A method as described in any of paragraphs 146 to 153 wherein said shape memory alloy comprises a nickel titanium alloy.

155. An inkjet nozzle arrangement for the ejection of ink from an ink ejection nozzle comprising:

a substrate;
a conductive coil formed on said substrate and operable in a controlled manner;
a moveable magnetic actuator surrounding said conductive coil and forming an ink nozzle chamber between said substrate and said actuator, said moveable magnetic actuator further including an ink ejection nozzle defined therein;

wherein variations in the energization level of said conductive coil cause said magnetic actuator to move from a first position to a second position, thereby causing a consequential ejection of ink from said nozzle chamber as a result of fluctuations in the ink pressure within said nozzle chamber.

156. An inkjet nozzle arrangement as described in paragraph 155 further comprising an ink supply channel inter-

connecting said nozzle chamber for the resupply of ink to said nozzle chamber.

157. An inkjet nozzle arrangement as described in any of paragraphs 155 to 156 wherein said moveable magnetic actuator is moveable from a first position having an expanded nozzle chamber volume to a second position having a contracted nozzle chamber volume by the operation of said conductive coil.

158. An inkjet nozzle arrangement as described in paragraph 157 further comprising:

at least one resilient member attached to said moveable magnetic actuator, so as to bias said moveable magnetic actuator, in its quiescent position, at said first position.

159. An ink jet nozzle arrangement as described in paragraph 158 wherein said at least one resilient member comprises a leaf spring.

159a. An inkjet nozzle arrangement as described in paragraph 155 wherein said interconnection comprises a series of elongated slots etched in said substrate.

160. An inkjet nozzle arrangement as described in paragraph 151 wherein said substrate comprises a silicon wafer and said ink supply channel is etched through said wafer.

161. An inkjet nozzle arrangement as described in any of paragraphs 155 to 160 wherein a slot is defined between said magnetic actuator and said substrate and the actuator portions adjacent said slot is hydophobically treated so as to minimize wicking through said slot.

162. An inkjet nozzle arrangement as described in any of paragraphs 155 to 161 further comprising a magnetic base plate located between said conductive coil and said substrate.

163. An inkjet nozzle arrangement as described in paragraph 162 wherein said magnetic actuator and said nozzle plate substantially encompasses said conductive coil.

164. An inkjet nozzle arrangement as described in any of paragraphs 155 to 163 wherein said magnetic actuator is formed from a cobalt nickel iron alloy.

165. A method of manufacturing a radiant plunger inkjet print head wherein an array of nozzles are formed on a substrate utilising planar monolithic deposition, lithographic and etching processes.

166. A method as described in paragraph 165 wherein multiple ink jet heads are formed simultaneously on a single planar substrate.

167. A method as described in paragraph 166 wherein said substrate is a silicon wafer.

168. A method as described in paragraph 165 wherein said print heads are formed utilising standardvlsi/ulsi processing.

169. A method as described in paragraph 165 wherein integrated drive electronics are formed on the same substrate.

170. A method as described in paragraph 169 wherein said integrated drive electronics comprise a CMOS process.

171. A method as described in paragraph 165 wherein ink is ejected from said substrate substantially normal to said substrate.

172. A method of manufacture of an ink jet print head arrangement including a series of nozzle chambers, said method comprising the steps of:

(a) utilizing an initial semiconductor wafer having an electrical circuitry layer and a buried epitaxial layer formed thereon on;
(b) etching a nozzle chamber cavity in said wafer said etching stopping substantially at said epitaxial layer;

(c) depositing and etching a first layer having a high saturation flux density on said electrical circuitry layer to define a first magnetic plate;
(d) depositing and etching an insulating layer on said first layer and said electrical circuitry layer, said etching including etching vias for a subsequent conductive layer;
(e) depositing and etching a conductive layer on said insulating layer in the form of a conductive coil conductively interconnected to said first layer;
(f) depositing and etching a sacrificial material layer in the region of said first magnetic plate and said coil, said etching including defining apertures for a series of spring posts;
(g) depositing and etching a second layer having a high saturation flux density so as form an interconnected second magnetic plate, series of attached springs and spring posts;
(h) etching the back of said wafer to said epitaxial layer;
(i) etching an ink ejection nozzle through said epitaxial layer interconnected with said nozzle chamber cavity; and (etching away any remaining sacrificial layers.

173. A method as described in paragraph 172 wherein said step (f) further comprises etching cavities defining a series of spring posts and said step (g) includes forming a series of leaf springs interconnected with said first magnetic plate for resiliently biasing said magnetic plate in a first direction.

174. A method as described in paragraph 172 wherein said conductive layer comprises substantially copper.

175. A method as described in paragraph 172 further including the step of depositing corrosion barriers over portions of said arrangement so as to reduce corrosion effects.

176. A method as described in paragraph 172 wherein the etching of layers includes etching vias so as to allow for the electrical interconnection of portions of subsequently layers.

177. A method as described in paragraph 172 wherein said magnetic flux material comprises substantially a cobalt nickel iron alloy.

178. A method as described in paragraph 172 wherein said wafer comprises a double side polished CMOS wafer.

179. A method as described in paragraph 172 wherein said steps are also utilized to simultaneously separate said wafer into separate printheads.

180. A method of manufacturing an electrostatic ink jet print head wherein an array of nozzles are formed on a substrate utilising planar monolithic deposition, lithographic and etching processes.

181. A method as described in paragraph 180 wherein multiple ink jet heads are formed simultaneously on a single planar substrate.

182. A method as described in paragraph 181 wherein said substrate is a silicon wafer.

183. A method as described in paragraph 180 wherein said print heads are formed utilising standard vlsi/ulsi processing.

184. A method as described in paragraph 180 wherein integrated drive electronics are formed on the same substrate.

185. A method as described in paragraph 184 wherein said integrated drive electronics comprise a CMOS process.

186. A method as described in paragraph 180 wherein ink is ejected from said substrate substantially normal to said substrate.

187. A method of manufacture of an ink jet print head arrangement including a series of nozzle chambers, said method comprising the steps of:

(a) utilizing an initial semiconductor wafer having an electrical circuitry layer formed thereon on;
(b) forming a bottom electrode layer of conductive material on or in said electrical circuitry layer;

(c) depositing and etching a first hydrophobic layer on said electrode layer;
(d) depositing and etching a first sacrificial layer of sacrificial material on said first hydrophobic layer;
(e) depositing and etching a top electrode layer of conductive material on said first sacrificial layer said top electrode layer including predetermined portions interconnecting with said electrical circuitry layer;
(f) depositing and etching a membrane layer on said top electrode layer;
(g) depositing and etching a second sacrificial layer on said membrane layer, said second sacrificial layer forming a blank for said nozzle chamber walls;
(h) depositing and etching an inert material layer on said second sacrificial layer so as to form said nozzle chamber walls surrounding said nozzle chamber in addition to a nozzle fluid ejection hole interconnecting with said nozzle chamber;
(i) etching an ink supply channel interconnecting with said nozzle chamber;

(etching away said sacrificial layers so as to leave an operational device.

188. A method as described in paragraph 187 wherein said top electrode layer and said membrane layer include a concertina edge so as to allow for movement of said membrane layer.

189. A method as described in paragraph 187 wherein said bottom electrode layer is formed from a metal plane layer of said circuitry layer.

190. A method as described in paragraph 187 wherein said ink supply channel is formed by etching a channel from the back surface of said wafer.

191. A method as described in paragraph 187 wherein said step (h) includes etching a nozzle rim around said nozzle fluid ejection hole.

192. A method as described in paragraph 187 wherein said step (h) includes etching a series of small holes in at least one wall of said nozzle chamber.

193. A method as described in paragraph 187 wherein said hydrophobic layer comprises substantially polytetrafluroethylene.

194. A method as described in paragraph 187 further including the step of depositing corrosion barriers over portions of said arrangement so as to reduce corrosion effects.

195. A method as described in paragraph 187 wherein said wafer comprises a double side polished CMOS wafer.

196. A method as described in paragraph 187 wherein said steps are also utilized to simultaneously separate said wafer into separate printheads.

197. A method of manufacturing a stacked electrostatic ink jet print head wherein an array of nozzles are formed on a substrate utilising planar monolithic deposition, lithographic and etching processes.

198. A method as described in paragraph 197 wherein multiple ink jet heads are formed simultaneously on a single planar substrate.

199. A method as described in paragraph 198 wherein said substrate is a silicon wafer.

200. A method as described in paragraph 197 wherein said print heads are formed utilising standard vlsi/ulsi processing.

201. A method as described in paragraph 197 wherein integrated drive electronics are formed on the same substrate.

202. A method as described in paragraph 201 wherein said integrated drive electronics comprise a CMOS process.

203. A method as described in paragraph 197 wherein ink is ejected from said substrate substantially normal to said substrate.

204. A method of manufacture of an ink jet print head arrangement including a series of nozzle chambers, said method comprising the steps of:

(a) utilizing an initial semiconductor wafer having an electrical circuitry layer thereon on including etched vias for interconnection of said circuitry with subsequent layers;
(b) repeatedly depositing a series of planar layers on said electrical circuitry layer said planer layers including a first conductive layer, a second conductive layer and an intermediate compressible non conductive layer;
(c) etching said planar layer so as to form a series of stacked alternating structures;
(d) isolating at least one first edge of a stacked alternating structure;
(e) etching said second conductive layer and said intermediate compressible layer along said edge so as to expose said first conductive layer;
(f) isolating a second edge of said stacked alternating structure;
(g) etching said first conductive layer and said intermediate compressible layer along said second edge so as to expose said second conductive layer;
(h) depositing and etching a third conductive layer having first portions interconnected along said first edge to said first conductive layer and a second portions interconnected along said second edge to said second conductive layer, said first and second portions being interconnected to corresponding portions in said electrical circuitry layer;
(i) depositing and etching a sacrificial material layer on said wafer, said etching forming a mould for a subsequent nozzle chamber layer;
(j) depositing and etching an inert material layer over said sacrificial layer so as to form a nozzle chamber surrounding said conductive layers in addition to an ink ejection hole;
(k) etching an ink supply channel through portions of said wafer to interconnect with said nozzle chamber; and
(l) etching away said sacrificial material layer.

205. A method as described in paragraph 204 wherein said step(j)includes etching a series of small holes in a wall of said nozzle chamber interconnecting said chamber with the ambient atmosphere.

206. A method as described in paragraph 204 wherein said first conductive layer and said second conductive layer are formed from different conductive material.

207. A method as described in paragraph 204 wherein said compressible layer comprises substantially elastomer.

208. A method as described in paragraph 207 wherein said method further includes swelling the elastomer along said edges.

209. A method as described in paragraph 204 wherein said ink supply channel is etched through said wafer from a back surface of said wafer.

210. A method as described in paragraph 204 further including the step of depositing corrosion barriers over portions of said arrangement so as to reduce corrosion effects.

211. A method as described in paragraph 204 wherein the etching of layers includes etching vias so as to allow for the electrical interconnection of portions of subsequently layers.

212. A method as described in paragraph 204 wherein said wafer comprises a double side polished CMOS wafer.

213. A method as described in paragraph 204 wherein said steps are also utilized to simultaneously separate said wafer into separate printheads.

214. A method of manufacturing a reverse spring level ink jet print head wherein an array of nozzles are formed on a substrate utilising planar monolithic deposition, lithographic and etching processes.

215. A method as described in paragraph 214 wherein multiple ink jet heads are formed simultaneously on a single planar substrate.

216. A method as described in paragraph 215 wherein said substrate is a silicon wafer.

217. A method as described in paragraph 214 wherein said print heads are formed utilising standard vlsi/ulsi processing.

218. A method as described in paragraph 214 wherein integrated drive electronics are formed on the same substrate.

219. A method as described in paragraph 218 wherein said integrated drive electronics comprise a CMOS process.

220. A method as described in paragraph 214 wherein ink is ejected from said substrate substantially normal to said substrate.

221. A method of manufacture of an ink jet print head arrangement including a series of nozzle chambers, said method comprising the steps of:

(a) utilizing an initial semiconductor wafer having an electrical circuitry layer and a buried epitaxial layer formed thereon on;
(b) etching a nozzle chamber cavity in said wafer said etching stopping substantially at said epitaxial layer;
(c) depositing and etching a first layer having a high saturation flux density on said electrical circuitry layer to define a first magnetic plate;
(d) depositing and etching an insulating layer on said first layer and said electrical circuitry layer, said etching including etching vias for a subsequent conductive layer;
(e) depositing and etching a conductive layer on said insulating layer in the form of a conductive coil conductively interconnected to said first layer;
(f) depositing and etching a sacrificial material layer in the region of said first magnetic plate and said coil, said etching including defining apertures for a series of spring posts, a lever arm and interconnected nozzle paddle;
(g) depositing and etching a second layer having a high saturation flux density so as form an interconnected second magnetic plate, a lever arm attached to a nozzle paddle and a series of spring posts around which said lever arm pivots;
(h) etching the back of said wafer to said epitaxial layer;
(i) etching an ink ejection nozzle through said epitaxial layer interconnected with said nozzle chamber cavity; and
(j)etching away any remaining sacrificial layers.

222. A method as described in paragraph 221 wherein said step (f) further comprises etching cavities defining a series of spring posts and said step (g) includes forming a series of torsional pivot springs interconnected with said lever arm for resiliently biasing said second magnetic plate substantially against said first magnetic plate.

223. A method as described in paragraph 221 wherein said conductive layer comprises substantially copper.

224. A method as described in paragraph 221 further including the step of depositing corrosion barriers over portions of said arrangement so as to reduce corrosion effects.

225. A method as described in paragraph 221 wherein the etching of layers includes etching vias so as to allow for the electrical interconnection of portions of subsequently layers.

226. A method as described in paragraph 221 wherein said magnetic flux material comprises substantially a cobalt nickel iron alloy.

227. A method as described in paragraph 221 wherein said wafer comprises a double side polished CMOS wafer.

228. A method as described in paragraph 221 wherein said steps are also utilized to simultaneously separate said wafer into separate printheads.

229. A method of manufacturing a paddle type lorenz force actuated ink jet print head wherein an array of nozzles are formed on a substrate utilizing planar monolithic deposition, lithographic and etching processes.

230. A method as described in paragraph 229 wherein multiple inkjet heads are formed simultaneously on a single planar substrate.

231. A method as described in paragraph 230 wherein said substrate is a silicon wafer.

232. A method as described in paragraph 229 wherein said print heads are formed utilizing standard vlsi/ulsi processing.

233. A method as described in paragraph 229 wherein integrated drive electronics are formed on the same substrate.

234. A method as described in paragraph 233 wherein said integrated drive electronics comprise a CMOS process.

235. A method as described in paragraph 229 wherein ink is ejected from said substrate substantially normal to said substrate.

236. A method of manufacture of an ink jet print head arrangement including a series of nozzle chambers, said method comprising the steps of:

(a) utilizing an initial semiconductor wafer having an electrical circuitry layer and a buried epitaxial layer formed thereon on, in addition to a top protecting layer having a series of vias interconnected to predetermined portions of said circuitry layer;
(b) forming on said semiconductor wafer layer a first conductive layer including a first conductive coil interconnected to predetermined portions of said circuitry layer;
(c) depositing and etching, on said first conductive layer, a non-conductive layer including predetermined vias for the interconnection of subsequent layers with lower layers;
(d) forming a second conductive layer on said nonconducting layer, including a second conductive coil and the interconnection of predetermined portions of said coil with said first conductive coil and said circuitry layer;
(e) depositing and etching a second non-conductive layer over said second conductive layer said etching including etching a series of slots in said second non-conductive layer;
(f) etching a series of slots through said first and second non-conductive layers, said first and second conductive layers so as to define a nozzle paddle;
(g) etching said semiconductor wafer under said nozzle paddle so as to define a nozzle chamber;
(h) back etching said semiconductor wafer to said epitaxial layer; and
(i) etching said epitaxial layer to define a nozzle ejection hole therein interconnecting with said nozzle chamber;

237. A method as described in paragraph 236 wherein said step (g) utilizes said epitaxial layer as an etch stop.

238. A method as described in paragraph 236 wherein said step (g) comprises a crystallographic etch.

239. A method as described in paragraph 236 wherein said step (i) includes etching a series of small holes in a wall of said nozzle chamber interconnecting said chamber with the ambient atmosphere.

240. A method as described in paragraph 236 wherein said first conductive layer and said second conductive layer are formed from substantially copper.

241. A method as described in paragraph 236 further including the step of depositing corrosion barriers over portions of said arrangement so as to reduce corrosion effects.

242. A method as described in paragraph 236 wherein said wafer comprises a double side polished CMOS wafer.

243. A method as described in paragraph 236 wherein said steps are also utilized to simultaneously separate said wafer into separate printheads.

244. A method of manufacturing a permanent magnet electromagnetic ink jet print head wherein an array of nozzles are formed on a substrate utilizing planar monolithic deposition, lithographic and etching processes.

245. A method as described in paragraph 244 wherein multiple ink jet heads are formed simultaneously on a single planar substrate.

246. A method as described in paragraph 245 wherein said substrate is a silicon wafer.

247. A method as described in paragraph 244 wherein said print heads are formed utilizing standard vlsi/ulsi processing.

248. A method as described in paragraph 244 wherein integrated drive electronics are formed on the same substrate.

249. A method as described in paragraph 248 wherein said integrated drive electronics comprise a CMOS process.

250. A method as described in paragraph 244 wherein ink is ejected from said substrate substantially normal to said substrate.

251. A method of manufacture of an ink jet print head arrangement including a series of nozzle chambers, said method comprising the steps of:

(a) utilizing an initial semiconductor wafer having an electrical circuitry layer and a buried epitaxial layer formed thereon on;
(b) depositing and etching a first inert layer, said etching including etching predetermined vias and a nozzle chamber aperture;
(c) forming a first conductive coil layer on said first inert layer around said nozzle aperture, said conductive coil layer including predetermined portions interconnecting with said electrical circuitry layer;
(d) utilizing said nozzle aperture to etch a nozzle chamber in said wafer;
(e) depositing and etching a sacrificial material layer over said wafer including said nozzle chamber, said etching including etching a series a mould for a series of magnet suspension posts and a permanent magnet above said nozzle aperture;
(f) deposit and etch a magnetic material layer, said magnetic material layer forming a permanent magnet above said nozzle aperture;
(g) deposit and etching an inert material layer interconnecting said permanent magnet to a series of spring posts in a resilient manner;
(h) back etching said wafer substantially to said buried epitaxial layer;
(i) etching a nozzle fluid ejection aperture through said buried epitaxial layer;

(etching away said sacrificial layer.

252. A method as described in paragraph 251 wherein said conductive coil layer is formed by first depositing and etching a sacrificial layer forming a mould for said conductive coil layer.

253. A method as described in paragraph 251 wherein said conductive coil layer is formed utilizing chemical mechanical planarization.

254. A method as described in paragraph 251 wherein said first inert layer comprises substantially silicon nitride.

255. A method as described in paragraph 251 wherein said conductive coil layer comprises substantially copper.

256. A method as described in paragraph 251 further including the step of depositing corrosion barriers over portions of said arrangement so as to reduce corrosion effects.

257. A method as described in paragraph 251 wherein the etching of layers includes etching vias so as to allow for the electrical interconnection of portions of subsequently layers.

258. A method as described in paragraph 251 wherein said wafer comprises a double side polished CMOS wafer.

259. A method as described in paragraph 251 wherein said steps are also utilized to simultaneously separate said wafer into separate printheads.

260. A method of manufacturing a planar swing grill electromagnetic print head wherein an array of nozzles are formed on a substrate utilizing planar monolithic deposition, lithographic and etching processes.

261. A method as described in paragraph 260 wherein multiple ink jet heads are formed simultaneously on a single

planar substrate.

262. A method as described in paragraph 261 wherein said substrate is a silicon wafer.

263. A method as described in paragraph 260 wherein said print heads are formed utilizing standard vlsi/ulsi processing.

264. A method as described in paragraph 260 wherein integrated drive electronics are formed on the same substrate.

265. A method as described in paragraph 264 wherein said integrated drive electronics comprise a CMOS process.

266. A method as described in paragraph 260 wherein ink is ejected from said substrate substantially normal to said substrate.

267. A method of manufacture of an ink jet print head arrangement including a series of nozzle chambers, said method comprising the steps of:

(a) utilizing an initial semiconductor wafer having an electrical circuitry layer and a buried epitaxial layer formed thereon on;
(b) etching a nozzle chamber aperture in said electrical circuitry layer interconnected with a nozzle chamber in said semiconductor wafer;
(c) depositing a first sacrificial layer filling said nozzle chamber;
(d) depositing and etching an inert material layer including a grill structure over said nozzle chamber aperture and vias for electrical interconnection of subsequent layers with said electrical circuitry layer;
(e) depositing and etching a first conductive material layer including a lower electrical coil portion interconnected with said electrical circuitry layer;
(f) depositing and etching an inert material layer over said first conductive material layer, said inert material layer including predetermined vias for interconnection of said first conductive material layer with subsequent layers;
(g) depositing and etching a second sacrificial layer including etching a mould for a fixed magnetic pole, a pivot, a series of springs and spring posts;
(h) depositing and etching a high saturation flux material layer to form said fixed magnetic pole, said pivot, an interconnected shutter grill lever arm and said springs and spring posts;
(i) depositing and etching a second inert material layer over said high saturation flux material layer including predetermined vias for interconnection of lower layers with subsequent layers;
(j) depositing and etching a second conductive material layer including a side electrical coil portion interconnected with said first conductive material layer;
(k) depositing and etching a third conductive material layer including a top electrical coil portion interconnected with said side conductive material layer;
(l) depositing and etching a top inert material layer as a corrosion barrier;
(m) back etching said wafer to said epitaxial layer;
(n) etching a nozzle aperture in said epitaxial layer; and
(o) etching away said sacrificial layers.

268. A method as described in paragraph 267 wherein said step further include the simultaneous formation of a shutter grill guard around said shutter.

269. A method as described in paragraph 267 wherein said epitaxial layer is utilized as an etch stop in said step (b).

270. A method as described in paragraph 267 wherein said step (b) comprises a crystallographic etch of said wafer.

271. A method as described in paragraph 267 wherein said conductive layers comprise substantially copper.

272. A method as described in paragraph 267 wherein said inert layers comprises substantially silicon nitride.

273. A method as described in paragraph 267 further including the step of depositing corrosion barriers over portions of said arrangement so as to reduce corrosion effects.

274. A method as described in paragraph 267 wherein said wafer comprises a double side polished CMOS wafer.

275. A method as described in paragraph 267 wherein said steps are also utilized to simultaneously separate said wafer into separate printheads.

276. A method of manufacturing a pulsed magnetic field ink jet print head wherein an array of nozzles are formed on a substrate utilizing planar monolithic deposition, lithographic and etching processes.

277. A method as described in paragraph 276 wherein multiple ink jet heads are formed simultaneously on a single planar substrate.

278. A method as described in paragraph 277 wherein said substrate is a silicon wafer.

279. A method as described in paragraph 276 wherein said print heads are formed utilizing standard vlsi/ulsi processing.

280. A method as described in paragraph 276 wherein integrated drive electronics are formed on the same substrate.

281. A method as described in paragraph 280 wherein said integrated drive electronics comprise a CMOS process.

282. A method as described in paragraph 276 wherein ink is ejected from said substrate substantially normal to said substrate.

283. A method of manufacturing a two plate reverse firing electromagnetic ink jet print head wherein an array of nozzles are formed on a substrate utilizing planar monolithic deposition, lithographic and etching processes.

284. A method as described in paragraph 283 wherein multiple ink jet heads are formed simultaneously on a single planar substrate.

285. A method as described in paragraph 284 wherein said substrate is a silicon wafer.

286. A method as described in paragraph 283 wherein said print heads are formed utilizing standard vlsi/ulsi processing.

287. A method as described in paragraph 283 wherein integrated drive electronics are formed on the same substrate.

288. A method as described in paragraph 287 wherein said integrated drive electronics comprise a CMOS process.

289. A method as described in paragraph 283 wherein ink is ejected from said substrate substantially normal to said substrate.

290. A method of manufacture of an ink jet print head arrangement including a series of nozzle chambers, said method comprising the steps of:

(a) utilizing an initial semiconductor wafer having an electrical circuitry layer formed thereon on;
(b) depositing and etching a first lower fixed coil layer of conductive material having predetermined interconnections with said electrical circuitry layer;
(c) depositing and etching a first protective layer over said fixed coil layer;
(d) depositing and etching a second moveable coil layer of conductive material having predetermined interconnections with said electrical circuitry layer;
(e) depositing and etching a second protective layer over said second moveable coil layer;
(f) depositing and etching a sacrificial material layer over said second moveable coil layer;
(g) depositing and etching an inert material over said sacrificial material layer to from a nozzle chamber around said first and second coil layer;
(h) etching an ink supply channel interconnected with said nozzle chamber;
(i) etching away said sacrificial material.

291. A method as described in paragraph 291 wherein said first and second coil layers are formed in an inert material layer.

292. A method as described in paragraph 291 further comprising the step of forming a hydrophobic layer between said first and second coil layer.

293. A method as described in paragraph 291 wherein said first and second coil layers are formed utilizing a dual damascene process.

294. A method as described in paragraph 291 wherein said ink supply channel is formed by etching a channel from the back surface of said wafer.

295. A method as described in paragraph 291 wherein said step (h) includes etching a series of small holes in at least one wall of said nozzle chamber.

296. A method as described in paragraph 291 wherein said hydrophobic layer comprises substantially polytetrafluroethylene.

297. A method as described in paragraph 291 further including the step of depositing corrosion barriers over portions of said arrangement so as to reduce corrosion effects.

298. A method as described in paragraph 291 wherein said wafer comprises a double side polished CMOS wafer.

299. A method as described in paragraph 291 wherein said steps are also utilized to simultaneously separate said wafer into separate printheads.

300. A method of manufacturing a linear stepper actuator ink jet print head wherein an array of nozzles are formed on a substrate utilizing planar monolithic deposition, lithographic and etching processes.

301. A method as described in paragraph 300 wherein multiple ink jet heads are formed simultaneously on a single planar substrate.

302. A method as described in paragraph 301 wherein said substrate is a silicon wafer.

303. A method as described in paragraph 300 wherein said print heads are formed utilizing standard vlsi/ulsi processing.

304. A method as described in paragraph 300 wherein integrated drive electronics are formed on the same substrate.

305. A method as described in paragraph 304 wherein said integrated drive electronics comprise a CMOS process.

306. A method as described in paragraph 300 wherein ink is ejected from said substrate substantially normal to said substrate.

307. A method of manufacture of an ink jet print head arrangement including a series of nozzle chambers, said method comprising the steps of:

(a) utilizing an initial semiconductor wafer having an electrical circuitry formed thereon on;
(b) depositing and etching a first sacrificial layer forming a lower electrical coil mould;
(c) depositing and etching a first conductive material layer including a lower electrical coil portion interconnected with said electrical circuitry layer;
(f) depositing and etching an inert material layer over said first conductive material layer, said inert material layer including predetermined vias for interconnection of said first conductive material layer with subsequent layers;
(g) depositing and etching a second sacrificial layer including etching a mould for a fixed magnetic pole, a series of moving poles, horizontal guides and a core pusher rod;
(h) depositing and etching a high saturation flux material layer to form said fixed magnetic pole, said series of

moving poles, said horizontal guides and said core pusher rod;
(i) depositing and etching a second inert material layer over said high saturation flux material layer including predetermined vias for interconnection of lower layers with subsequent layers;
(j) depositing and etching a second conductive material layer including a side electrical coil portion interconnected with saidfust conductive material layer;
(k) depositing and etching a third conductive material layer including a top electrical coil portion interconnected with said side conductive material layer;
(l) depositing and etching a hydrophobic material layer to form a plunger element surrounding said core pusher rod;
(m) depositing and etching a third sacrificial material layer to form a nozzle chamber mould;
(n) depositing and etching a third layer of inert material around said plunger element forming a nozzle chamber;
(o) etching an ink supply channel to said nozzle chamber;
(p) etching away said sacrificial layers.

308. A method as described in paragraph 307 wherein said conductive layers comprise substantially copper.

309. A method as described in paragraph 307 wherein said inert layers comprises substantially silicon nitride.

310. A method as described in paragraph 307 further including the step of depositing corrosion barriers over portions of said arrangement so as to reduce corrosion effects.

311. A method as described in paragraph 307 wherein said hydrophobic layer comprises substantially polytetrafluroethylene.

312. A method as described in paragraph 307 wherein said step (o) comprises etching an ink supply channel through said wafer.

313. A method as described in paragraph 307 wherein said wafer comprises a double side polished CMOS wafer.

314. A method as described in paragraph 307 wherein said steps are also utilized to simultaneously separate said wafer into separate printheads.

315. A method of manufacturing a gear driven shutter ink jet print head wherein an array of nozzles are formed on a substrate utilizing planar monolithic deposition, lithographic and etching processes.

316. A method as described in paragraph 315 wherein multiple ink jet heads are formed simultaneously on a single planar substrate.

317. A method as described in paragraph 316 wherein said substrate is a silicon wafer.

318. A method as described in paragraph 315 wherein said print heads are formed utilizing standard vlsi/ulsi processing.

319. A method as described in paragraph 315 wherein integrated drive electronics are formed on the same substrate.

320. A method as described in paragraph 319 wherein said integrated drive electronics comprise a CMOS process.

321. A method as described in paragraph 315 wherein ink is ejected from said substrate substantially normal to said substrate.

322. A method of manufacturing a tapered magnetic pole ink jet print head wherein an array of nozzles are formed on a substrate utilising planar monolithic deposition, lithographic and etching processes.

323. A method as described in paragraph 322 wherein multiple ink jet heads are formed simultaneously on a single planar substrate.

324. A method as described in paragraph 323 wherein said substrate is a silicon wafer.

325. A method as described in paragraph 322 wherein said print heads are formed utilising standard vlsi/ulsi processing.

326. A method as described in paragraph 322 wherein integrated drive electronics are formed on the same substrate.

327. A method as described in paragraph 326 wherein said integrated drive electronics comprise a CMOS process.

328. A method as described in paragraph 322 wherein ink is ejected from said substrate substantially normal to said substrate.

329. A method of manufacture of an ink jet print head arrangement including a series of nozzle chambers, said method comprising the steps of:

(a) utilizing an initial semiconductor wafer having an electrical circuitry layer and a buried epitaxial layer formed thereon on;
(b) etching a nozzle chamber cavity in said wafer said etching stopping substantially at said epitaxial layer;
(c) filling said nozzle chamber cavity with a first sacrificial material layer;
(d) depositing and etching a first layer having a high saturation flux density on said electrical circuitry layer to define a first magnetic plate;
(e) depositing and etching an insulating layer on said first layer and said electrical circuitry layer, said etching including etching vias for a subsequent conductive layer;
(f) depositing and etching a conductive layer on said insulating layer in the form of a conductive coil conductively interconnected to said first layer;
(g) depositing and etching a sacrificial material layer in the region of said first magnetic plate and said coil;
(h) depositing and etching a second layer having a high saturation flux density so as form a second magnetic plate over said nozzle chamber surrounded by an annulus;
(i) depositing and etching an inert material layer interconnecting said magnetic plate and said annulus in a resilient manner;
(etching the back of said wafer to said epitaxial layer;
(k) etching an ink ejection nozzle through said epitaxial layer interconnected with said nozzle chamber cavity; and
(k) etching away any remaining sacrificial layers.

330. A method as described in paragraph 329 wherein said conductive layer comprises substantially copper.

331. A method as described in paragraph 329 further including the step of depositing corrosion barriers over portions of said arrangement so as to reduce corrosion effects.

332. A method as described in paragraph 329 wherein the etching of layers includes etching vias so as to allow for the electrical interconnection of portions of subsequently layers.

333. A method as described in paragraph 329 wherein said magnetic flux material comprises substantially a cobalt nickel iron alloy.

334. A method as described in paragraph 329 wherein said inert material comprises silicon nitride.

335. A method as described in paragraph 329 wherein said second magnetic plate includes a tapered portion adjacent said nozzle chamber.

336. A method as described in paragraph 329 wherein said wafer comprises a double side polished CMOS wafer.

337. A method as described in paragraph 329 wherein said steps are also utilized to simultaneously separate said wafer into separate printheads.

338. A method of manufacturing a linear spring electromagnetic grill ink jet print head wherein an array of nozzles are formed on a substrate utilizing planar monolithic deposition, lithographic and etching processes.

339. A method as described in paragraph 338 wherein multiple ink jet heads are formed simultaneously on a single planar substrate.

340. A method as described in paragraph 339 wherein said substrate is a silicon wafer.

341. A method as described in paragraph 338 wherein said print heads are formed utilizing standard vlsi/ulsi processing.

342. A method as described in paragraph 338 wherein integrated drive electronics are formed on the same substrate.

343. A method as described in paragraph 342 wherein said integrated drive electronics comprise a CMOS process.

344. A method as described in paragraph 338 wherein ink is ejected from said substrate substantially normal to said substrate.

345. A method of manufacture of an inkjet print head arrangement including a series of nozzle chambers, said method comprising the steps of:

(a) utilizing an initial semiconductor wafer having an electrical circuitry layer and a buried epitaxial layer formed thereon on;
(b) etching a nozzle chamber aperture in said electrical circuitry layer interconnected with a nozzle chamber in said semiconductor wafer;
(c) depositing a first sacrificial layer filling said nozzle chamber;
(d) depositing and etching an inert material layer including a grill structure over said nozzle chamber aperture and vias for electrical interconnection of subsequent layers with said electrical circuitry layer;
(e) depositing and etching a first conductive material layer including a series of lower electrical coil portions interconnected with said electrical circuitry layer;
(f) depositing and etching an inert material layer over said first conductive material layer, said inert material layer including predetermined vias for interconnection of said first conductive material layer with subsequent layers;
(g) depositing and etching a second sacrificial layer including etching a mould for a solenoid, a fixed magnetic pole, and a linear spring anchor;
(h) depositing and etching a high saturation flux material layer to form said series of fixed magnetic poles, a linear spring, said linear spring anchor and an interconnected shutter grill;
(i) depositing and etching a second inert material layer over said high saturation flux material layer including predetermined vias for interconnection of lower layers with subsequent layers;
(j) depositing and etching a second conductive material layer including side electrical coil portions surrounding said series of fixed magnetic poles interconnected with said first conductive material layer;
(k) depositing and etching a third conductive material layer including a top electrical coil portion interconnected with said side conductive material layer;
(l) depositing and etching a top inert material layer as a corrosion barrier;
(m) back etching said wafer to said epitaxial layer;
(n) etching a nozzle aperture in said epitaxial layer; and
(o) etching away said sacrificial layers.

346. A method as described in paragraph 345 wherein said epitaxial layer is utilized as an etch stop in said step (b).

347. A method as described in paragraph 345 wherein said step (b) comprises a crystallographic etch of said wafer.

348. A method as described in paragraph 345 wherein said high saturation flux material comprises substantially a cobalt nickel iron alloy.

349. A method as described in paragraph 345 wherein said conductive layers comprise substantially copper.

350. A method as described in paragraph 345 wherein said inert layers comprises substantially silicon nitride.

351. A method as described in paragraph 345 further including the step of depositing corrosion barriers over

portions of said arrangement so as to reduce corrosion effects.

352. A method as described in paragraph 345 wherein said wafer comprises a double side polished CMOS wafer.

353. A method as described in paragraph 345 wherein said steps are also utilized to simultaneously separate said wafer into separate printheads.

354. A method of manufacturing a lorenz diaphragm electromagnetic inkjet print head wherein an array of nozzles are formed on a substrate utilising planar monolithic deposition, lithographic and etching processes.

355. A method as described in paragraph 354 wherein multiple ink jet heads are formed simultaneously on a single planar substrate.

356. A method as described in paragraph 355 wherein said substrate is a silicon wafer.

357. A method as described in paragraph 354 wherein said print heads are formed utilising standard vlsi/ulsi processing.

358. A method as described in paragraph 354 wherein integrated drive electronics are formed on the same substrate.

359. A method as described in paragraph 358 wherein said integrated drive electronics comprise a CMOS process.

360. A method as described in paragraph 354 wherein ink is ejected from said substrate substantially normal to said substrate.

361. A method of manufacture of an ink jet print head arrangement including a series of nozzle chambers, said method comprising the steps of:

(a) utilizing an initial semiconductor wafer having an electrical circuitry layer and a buried epitaxial layer formed thereon on;
(b) etching a nozzle chamber cavity in said wafer said etching stopping substantially at said epitaxial layer;
(c) depositing and etching a first layer of sacrificial material, filling said nozzle chamber cavity, said etching including etching a series of concertinaed ridges in said sacrificial layer above said nozzle chamber cavity;
(d) depositing and etching a first inert material layer on said concertinaed ridges, said first inert material layer retaining a series of concertined ridges on the surface thereof;
(e) depositing and etching a first conductive material layer over the concertinead ridges of said first inert material layer to form a coil layer having a series of concertianed wire portions over said nozzle cavity;
(d) depositing and etching a second inert material layer on said first conductive material layer, said second first inert material layer retaining a series of concertined ridges on the surface thereof;
(e) etching the back of said wafer to said epitaxial layer;
(f) etching an ink ejection nozzle through said epitaxial layer interconnected with said nozzle chamber cavity; and
(g) etching away any remaining sacrificial layers.

362. A method as described in paragraph 361 wherein said inert material layers comprise substantially silicon nitride.

363. A method as described in paragraph 361 wherein said conductive layer comprises substantially copper.

364. A method as described in paragraph 361 further including the step of depositing corrosion barriers over portions of said arrangement so as to reduce corrosion effects.

365. A method as described in paragraph 361 wherein the etching of layers includes etching vias so as to allow for the electrical interconnection of portions of subsequently layers.

366. A method as described in paragraph 361 wherein said wafer comprises a double side polished CMOS wafer.

367. A method as described in paragraph 361 wherein said steps are also utilized to simultaneously separate said wafer into separate printheads.

368. A method of manufacturing polytetrafluroethylene surface shooting shuttered oscillating pressure ink jet print head wherein an array of nozzles are formed on a substrate utilizing planar monolithic deposition, lithographic and etching processes.

369. A method as described in paragraph 368 wherein multiple inkjet heads are formed simultaneously on a single planar substrate.

370. A method as described in paragraph 369 wherein said substrate is a silicon wafer.

371. A method as described in paragraph 368 wherein said print heads are formed utilizing standard vlsi/ulsi processing.

372. A method as described in paragraph 368 wherein integrated drive electronics are formed on the same substrate.

373. A method as described in paragraph 372 wherein said integrated drive electronics comprise a CMOS process.

374. A method as described in paragraph 368 wherein ink is ejected from said substrate substantially normal to said substrate.

375. A method of manufacture of an inkjet print head arrangement including a series of nozzle chambers, said method comprising the steps of:

(a) utilizing an initial semiconductor wafer having an electrical circuitry layer formed thereon on;
(b) etching a nozzle inlet hole in said electrical circuitry layer;
(c) depositing and etching a first sacrificial material layer over said electrical circuitry layer including filling said nozzle inlet hole, said etching including etching an actuator anchor area in said first sacrifi
(e) depositing and etching a first conductive layer on said first expansion material layer, said first conductive material layer being conductively interconnected to said electrical circuitry layer via said vias;
(f) depositing and etching a second expansion material layer of a material having a high coefficient of thermal expansion, said etching including forminga - moveable paddle element from the combination of said first and second expansion material layers and said first conductive layer;
(g) depositing and etching a second sacrificial material layer, said etching forming a nozzle chamber mould;
(h) depositing and etching an inert material layer over said sacrificial material layer so as to form a nozzle chamber around said moveable paddle, said etching including etching a nozzle ejection aperture in said inert material layer;
(i) etching an ink supply channel through said wafer; and

(etching away said sacrificial layers.

376. A method as described in paragraph 375 wherein said step (h) includes etching a series of small holes in said inert material layer.

377. A method as described in paragraph 375 wherein said first and second expansion material layers comprise substantially polytetrafluroethylene.

378. A method as described in paragraph 375 wherein said inert material layer comprises substantially silicon nitride.

379. A method as described in paragraph 375 wherein said ink supply channel is formed by etching a channel from the back surface of said wafer.

380. A method as described in paragraph 375 further including the step of depositing corrosion barriers over portions of said arrangement so as to reduce corrosion effects.

381. A method as described in paragraph 375 wherein said wafer comprises a double side polished CMOS wafer.

382. A method as described in paragraph 375 wherein said steps are also utilized to simultaneously separate said wafer into separate printheads.

383. A method of manufacturing a magnetostrictive inkjet print head wherein an array of nozzles are formed on a substrate utilizing planar monolithic deposition, lithographic and etching processes.

384. A method as described in paragraph 383 wherein multiple ink jet heads are formed simultaneously on a single planar substrate.

385. A method as described in paragraph 384 wherein said substrate is a silicon wafer.

386. A method as described in paragraph 383 wherein said print heads are formed utilizing standard vlsi/ulsi processing.

387. A method as described in paragraph 383 wherein integrated drive electronics are formed on the same substrate.

388. A method as described in paragraph 387 wherein said integrated drive electronics comprise a CMOS process.

389. A method as described in paragraph 383 wherein ink is ejected from said substrate substantially normal to said substrate.

390. A method of manufacturing a shape memory alloy ink jet print head wherein an array of nozzles are formed on a substrate utilizing planar monolithic deposition, lithographic and etching processes.

391. A method as described in paragraph 390 wherein multiple ink jet heads are formed simultaneously on a single planar substrate.

392. A method as described in paragraph 391 wherein said substrate is a silicon wafer.

393. A method as described in paragraph 390 wherein said print heads are formed utilizing standard vlsi/ulsi processing.

394. A method as described in paragraph 390 wherein integrated drive electronics are formed on the same substrate.

395. A method as described in paragraph 394 wherein said integrated drive electronics comprise a CMOS process.

396. A method as described in paragraph 390 wherein ink is ejected from said substrate substantially normal to said substrate.

397. A method of manufacture of an ink jet print head arrangement including a series of nozzle chambers, said method comprising the steps of:

(a) utilizing an initial semiconductor wafer having an electrical circuitry layer and a buried epitaxial layer formed thereon on;
(b) etching a nozzle chamber in said wafer and said electrical circuitry layer;
(c) depositing and etching a layer of sacrificial material, filling said nozzle chamber;
(d) depositing and etching a layer of shape memory alloy forming a conductive paddle structure over said nozzle chamber attached to said electrical circuitry layer;
(e) back etching said semiconductor wafer to said epitaxial layer;
(f) etching said epitaxial layer to define a nozzle ejection hole therein interconnecting with said nozzle chamber;
(g) etching away said sacrificial layers.

398. A method as described in paragraph 397 wherein said step (b) utilizes said epitaxial layer as an etch stop.

399. A method as described in paragraph 397 wherein said step (b) comprises a crystallographic etch.

400. A method as described in paragraph 397 wherein said shape memory alloy comprises substantially nitinol.

401. A method as described in paragraph 397 further including the step of depositing corrosion barriers over portions of said arrangement so as to reduce corrosion effects.

402. A method as described in paragraph 397 wherein said wafer comprises a double side polished CMOS wafer.

403. A method as described in paragraph 397 wherein said steps are also utilized to simultaneously separate said wafer into separate printheads.

404. A method of manufacture of a Coil Actuated Magnetic Plate Ink Jet Printer print head wherein an array of nozzles are formed on a substrate utilizing planar monolithic deposition, lithographic and etching processes.

405. A method as described in paragraph 404 wherein multiple ink jet heads are formed simultaneously on a single planar substrate.

406. A method as described in paragraph 405 wherein said substrate is a silicon wafer.

407. A method as described in paragraph 404 wherein said print heads are formed utilizing standard vlsi/ulsi processing.

408. A method as described in paragraph 404 wherein integrated drive electronics are formed on the same substrate.

409. A method as described in paragraph 408 wherein said integrated drive electronics comprise a CMOS process. A method as described in paragraph 1 wherein ink is ejected from said substrate substantially normal to said substrate.

410. A method of manufacture of an ink jet print head arrangement including a series of nozzle chambers, said method comprising the steps of:

utilizing an initial semiconductor wafer having an electrical circuitry layer formed thereon on; etching a series of slots in at least said circuitry layer to define a nozzle cavity inlet;
depositing and etching a first layer of magnetic flux material on said electrical circuitry layer to define a first magnetic plate;
depositing and etching a insulating layer on said first layer and said electrical circuitry layer, said etching including etching vias for a subsequent conductive layer;
depositing and etching a conductive layer in for form of a conductive coil conductively interconnected to said electrical circuitry layer;
depositing and etching a hydrophobic material layer in the region of said conductive coil;
depositing and etching a sacrificial material layer in the region of said first magnetic plate and said coil, said etching including defining a cavity for the walls of a nozzle chamber;
depositing and etching a second layer of magnetic flux material over said sacrificial material so as to substantially enclose said conductive coil;
etching away said sacrificial material; etching an ink supply channel through said wafer to form a fluid communication with said nozzle chamber;

411. A method as described in paragraph 410 wherein said step (g) further comprises etching cavities defining a series of spring posts and said step (h) includes forming a series of leaf springs interconnected with said first magnetic plate for resiliently biasing said magnetic plate in a first direction.

412. A method as described in paragraph 410 wherein said conductive layer comprises substantially copper.
A method as described in paragraph 8 further including the step of depositing corrosion barriers over portions of said arrangement so as to reduce corrosion effects.

413. A method as described in paragraph 410 wherein the etching of layers includes etching via so as to allow for

the electrical interconnection of portions of subsequently layers.

414. A method as described in paragraph 410 wherein said magnetic flux material comprises substantially a cobalt nickel iron alloy.

415. A method as described in paragraph 410 wherein said wafer comprises a double side polished CMOS wafer.

416. A method as described in paragraph 410 wherein said step (j) comprises a through wafer etch from a back surface of said wafer.

417. A method as described in paragraph 410 wherein said steps are also utilized to simultaneously separate said wafer into separate printheads.

Claims

1. In an inkjet nozzle comprising:

a nozzle chamber having an ink ejection port in one wall of said chamber;
an ink supply source interconnected to said nozzle chamber;
an electrostatic actuator to eject ink from said nozzle chamber via said ink ejection port, said electrostatic actuator comprising a series of conductive parallel plates interleaved with a resiliently compressible material; such that,
a potential difference across said plates attracts adjacent plates to one another thereby causing said compressible material to resiliently yield; and
reducing said potential difference returns said compressible material to its quiescent state, thereby resulting in the ejection of ink from said ejection port.

2. An ink jet nozzle as claimed in claim 1 wherein said resilient yielding of said compressible material results in ink being drawn into said nozzle chamber by means of surface tension effects around said ink ejection port.

3. An ink jet nozzle as claimed in claim 1 wherein said compressible material comprises a material having a high dielectric constant.

4. An ink jet nozzle as claimed in claim 1 wherein said electrostatic actuator is constructed utilising semiconductor fabrication techniques by laying down one planer layer at a time so as to form an initial sandwiched preform and subsequently selectively etching said preform so as to provide for an electrical interconnect to the conductive parallel plates.

5. An ink jet nozzle as claimed in claim 1 wherein groups of said series of said conductive parallel plates are constructed from different materials so as to allow for selective etching of said plates so as to divide them into two groups of different polarities during operation.

6. An ink jet nozzle as claimed in claim 5 wherein plates from each of said group are interconnected to a common conductive portion for the provision of a charge to said conductive plates.

7. An ink jet nozzle as claimed in claim 1 wherein said plates are constructed utilising chemical vapour deposition techniques.

8. An ink jet nozzle as claimed in claim 1 wherein an outer surface of said nozzle chambers includes a plurality of etchant holes provided so as to allow a more rapid etching of sacrificial layers during construction.

9. An inkjet nozzle comprising:

a nozzle chamber having and ink ejection port in one wall of said chamber;
an ink supply source interconnected to said nozzle chamber;
an electrostatic actuator to eject ink from said nozzle chamber via said ink ejection port, said electrostatic actuator comprising a series of conductive parallel plates interleaved with a resiliently compressible material;

control means for producing a potential difference across said plates so that said material is resiliently compressed such that, upon deactivation, said electrostatic actuator causes ink to be ejected via said ink ejection port.

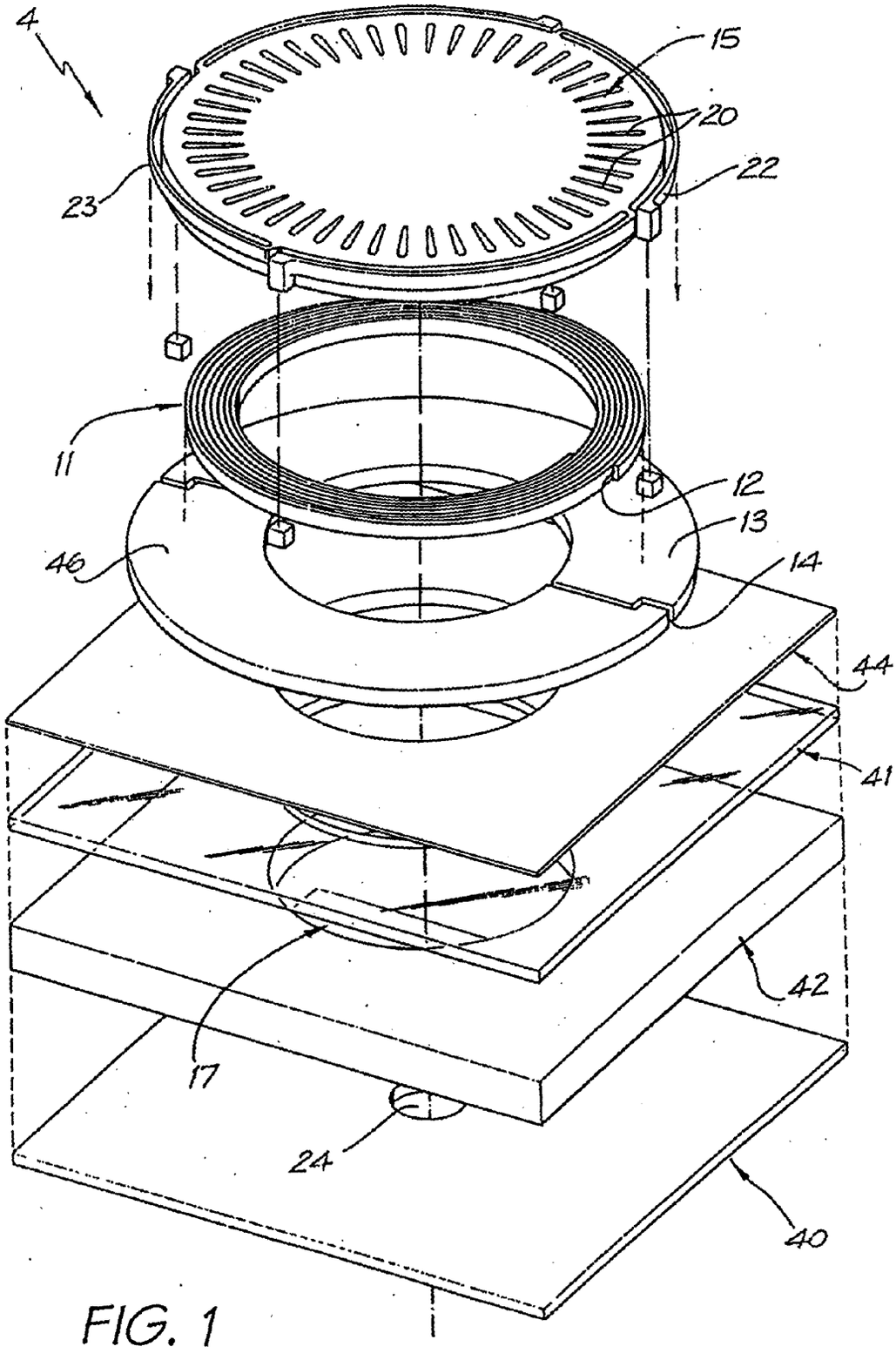

FIG. 1

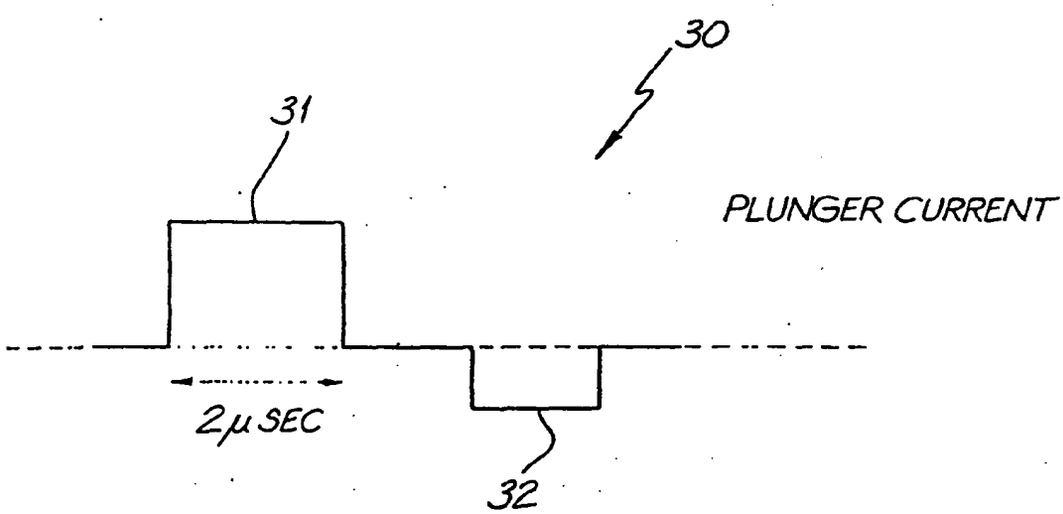

FIG. 2

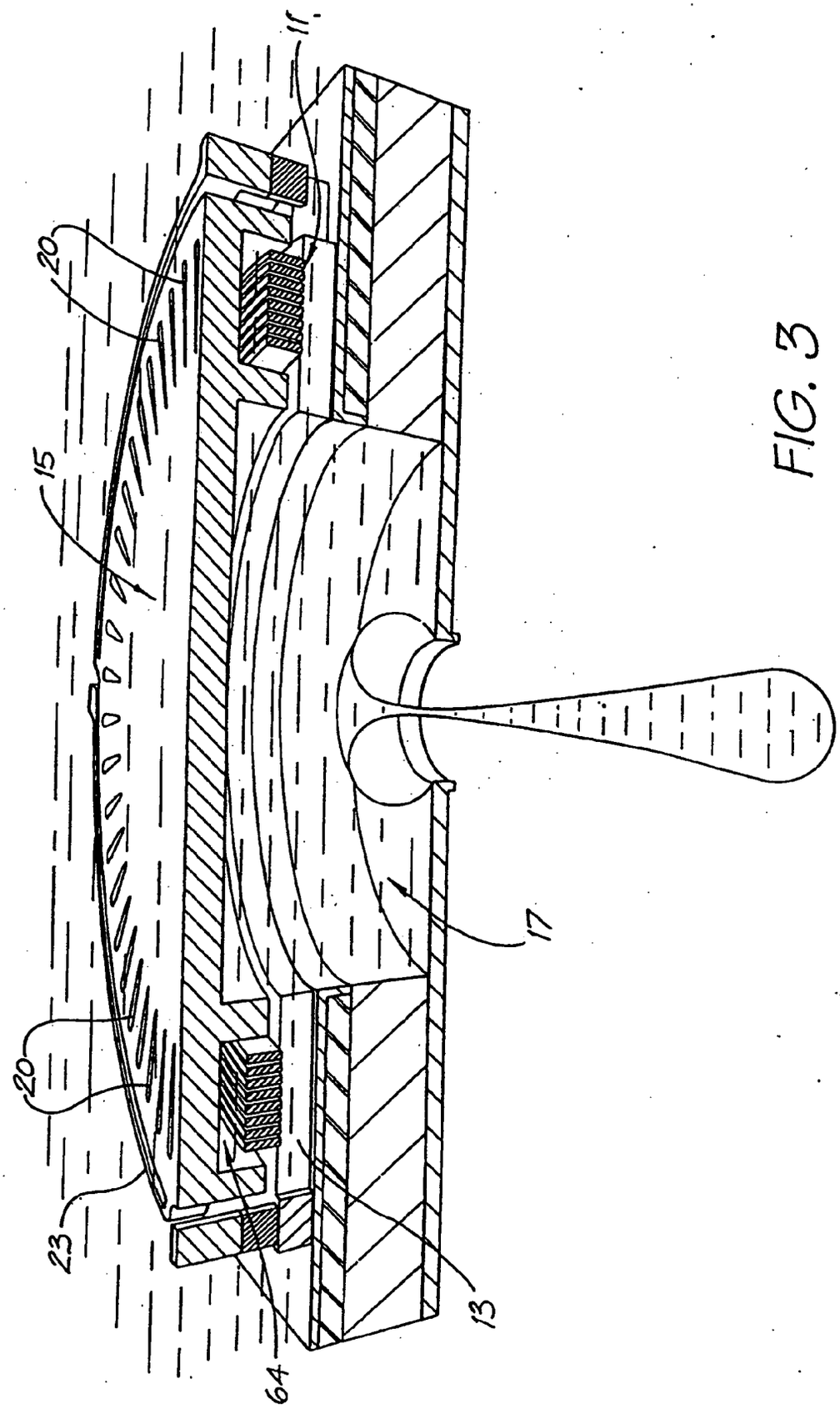

FIG. 3

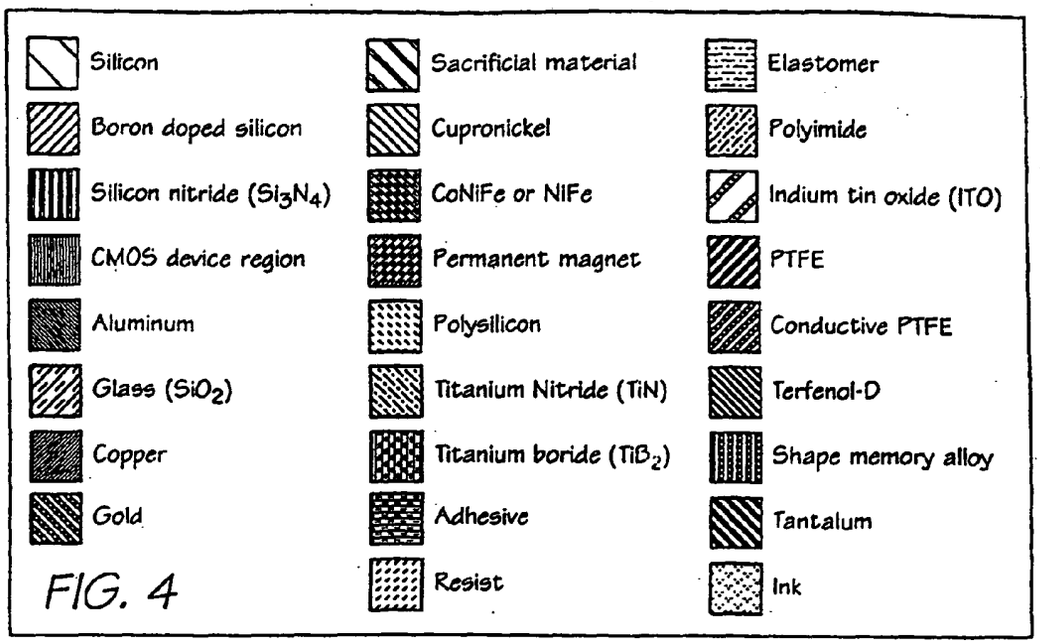

FIG. 4

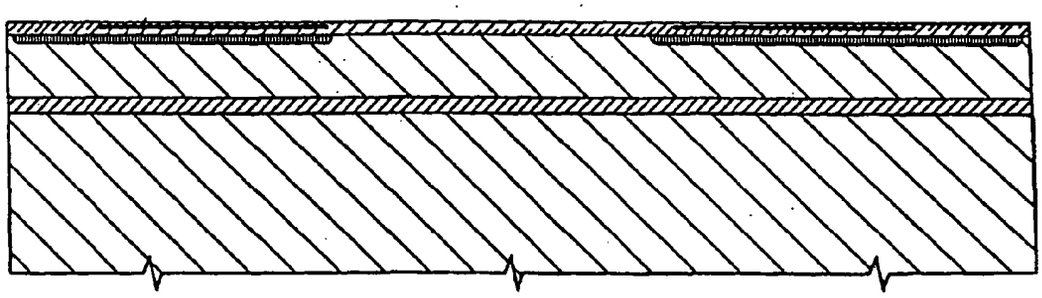

FIG. 5

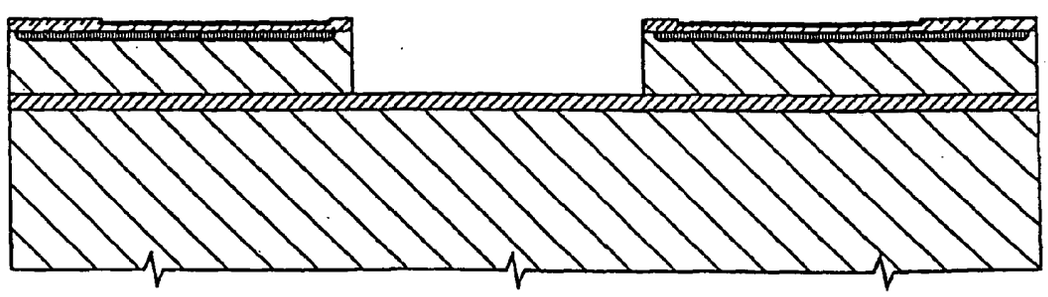

FIG. 6

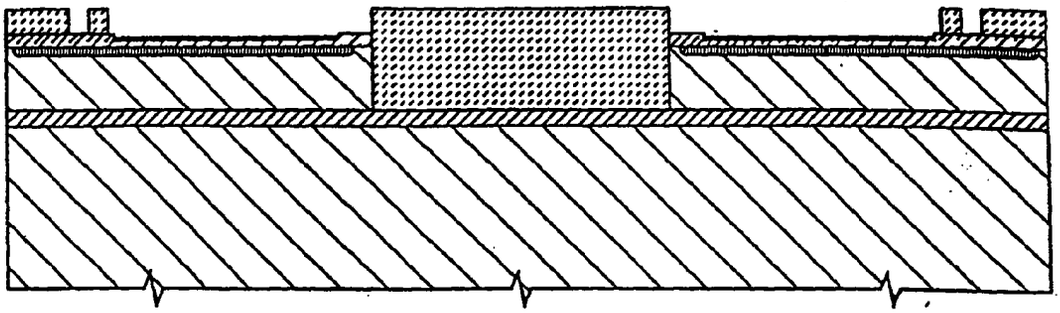

FIG. 7

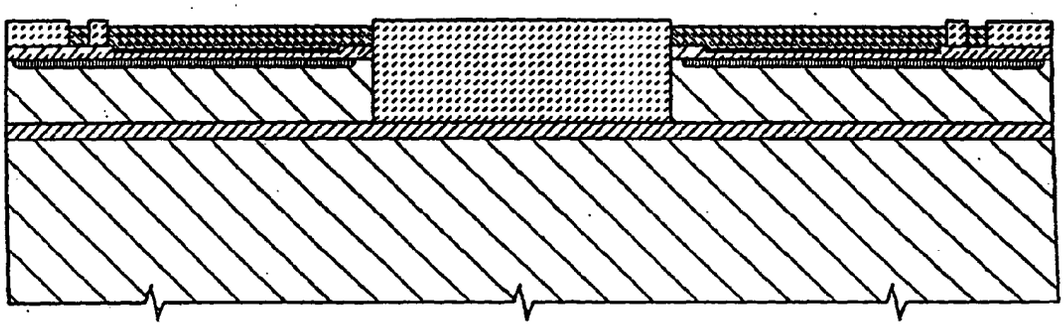

FIG. 8

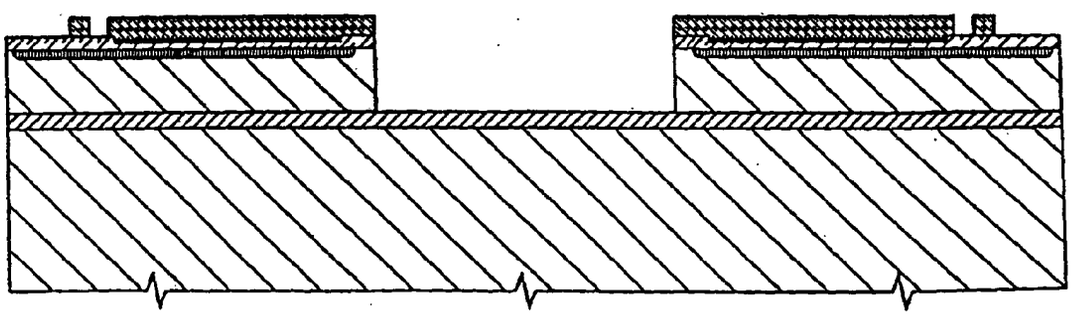

FIG. 9

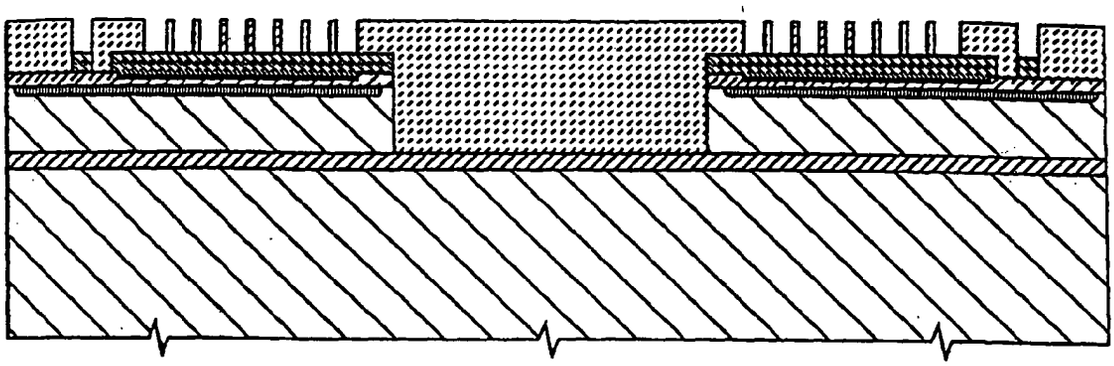

FIG. 10

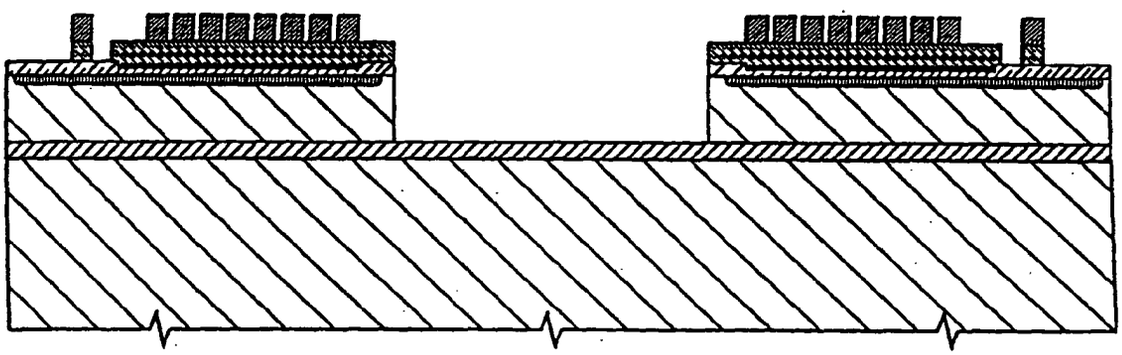

FIG. 11

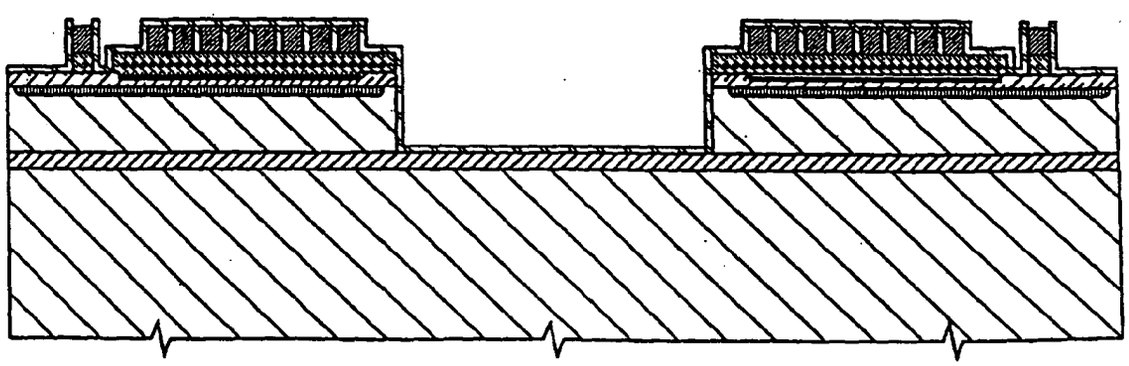

FIG. 12

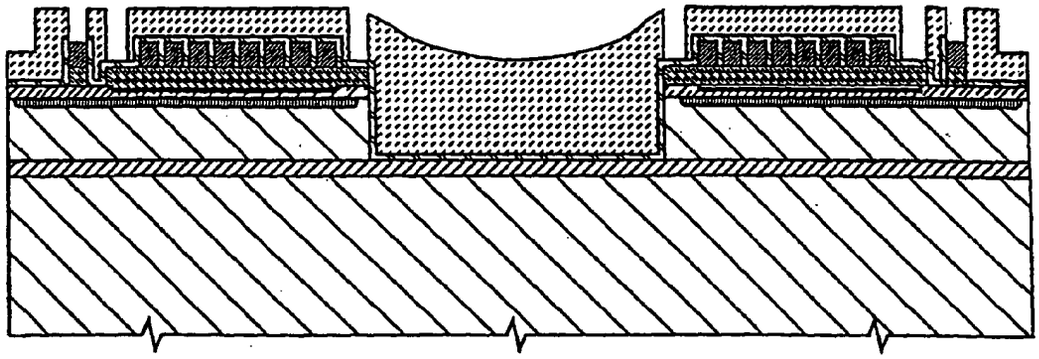

FIG. 13

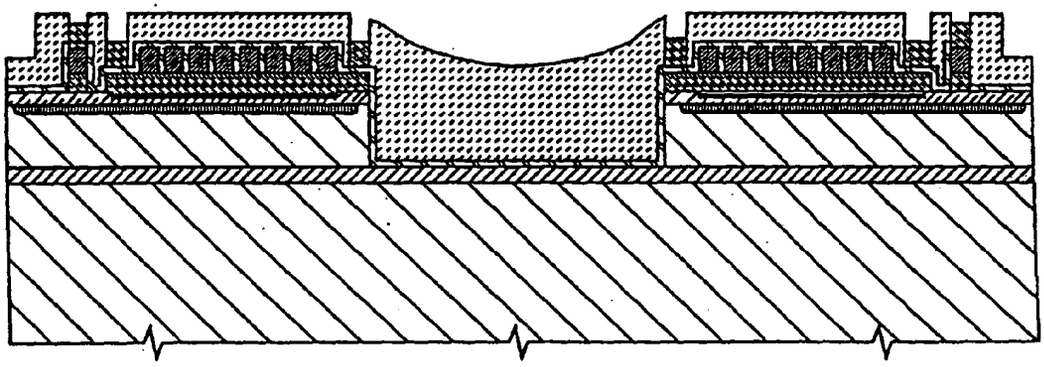

FIG. 14

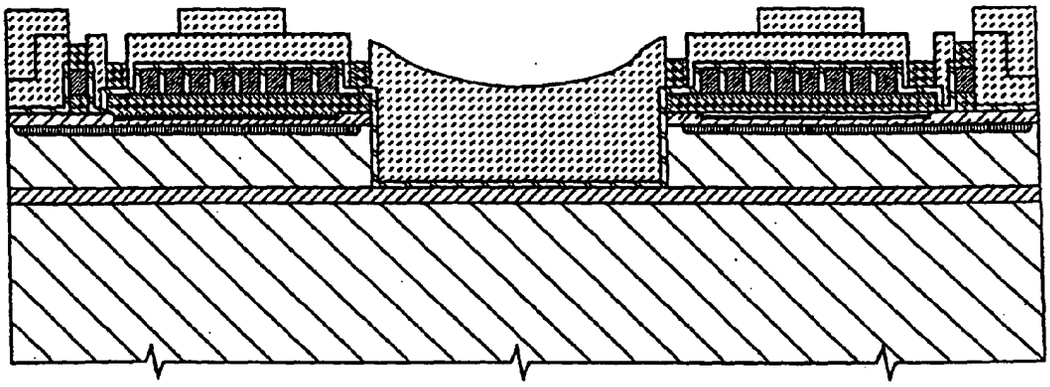

FIG. 15

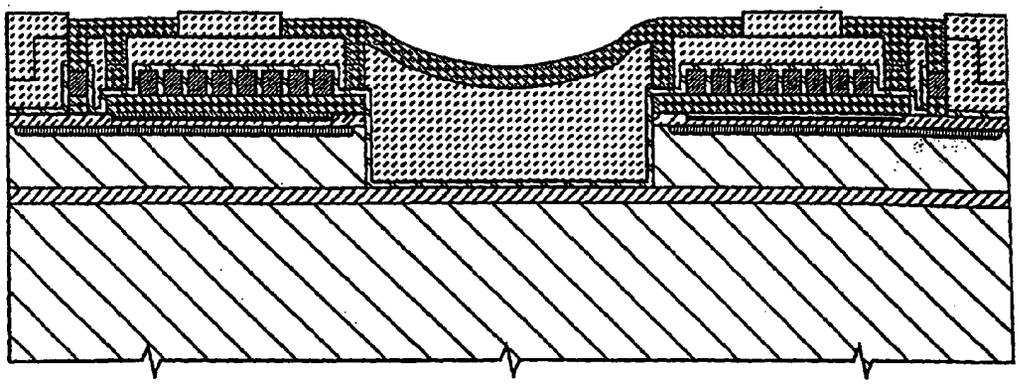

FIG. 16

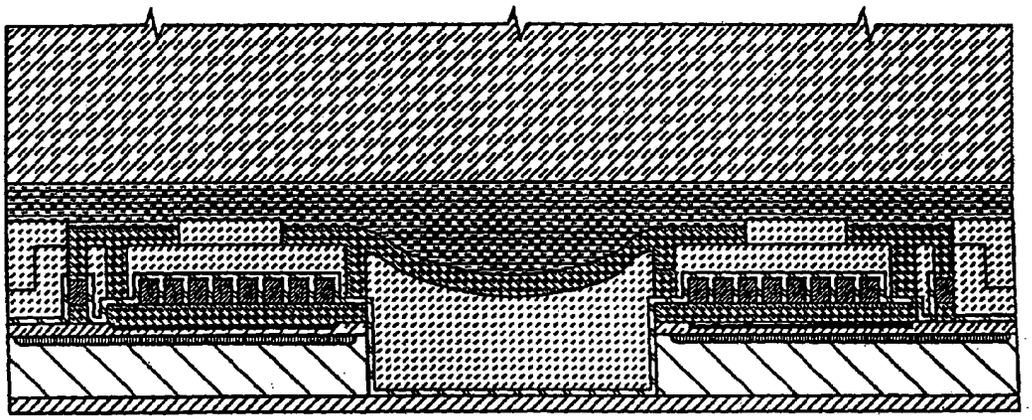

FIG. 17

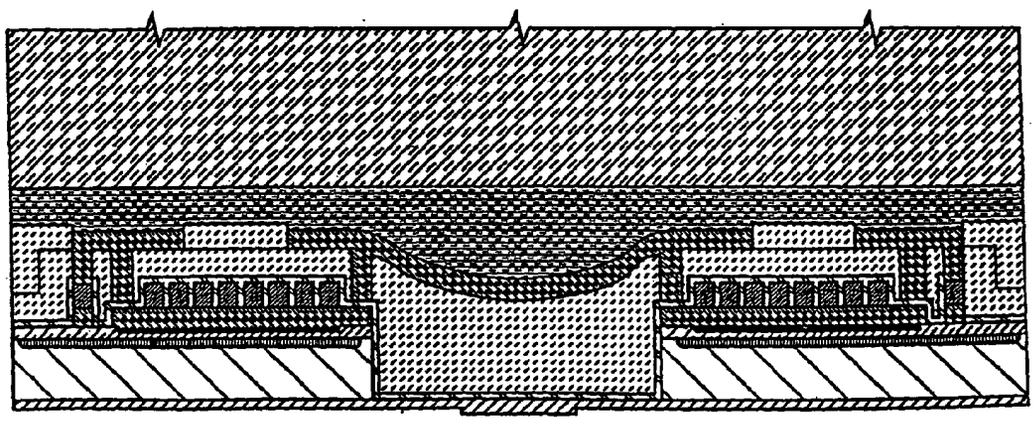

FIG. 18

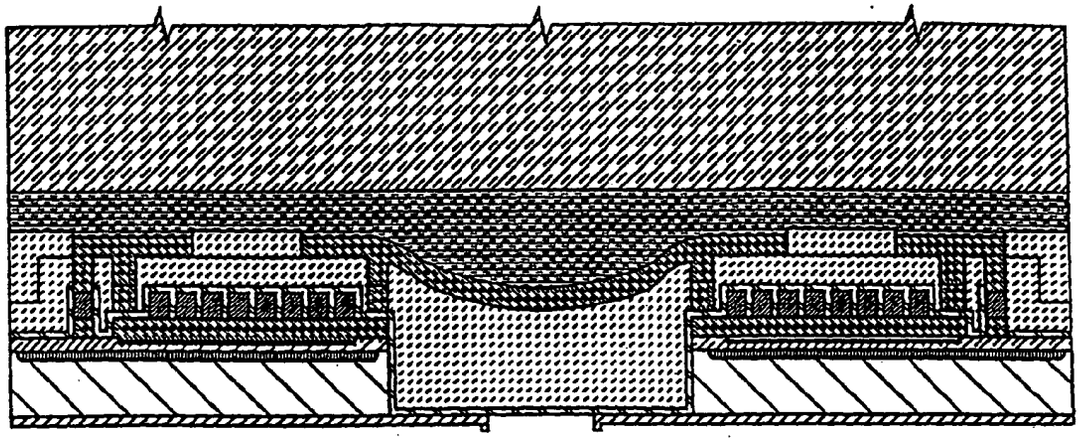

FIG. 19

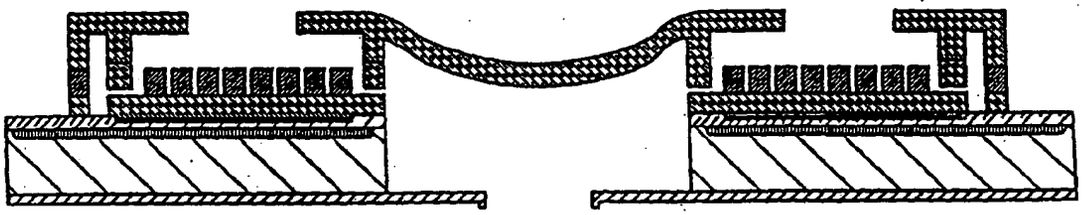

FIG. 20

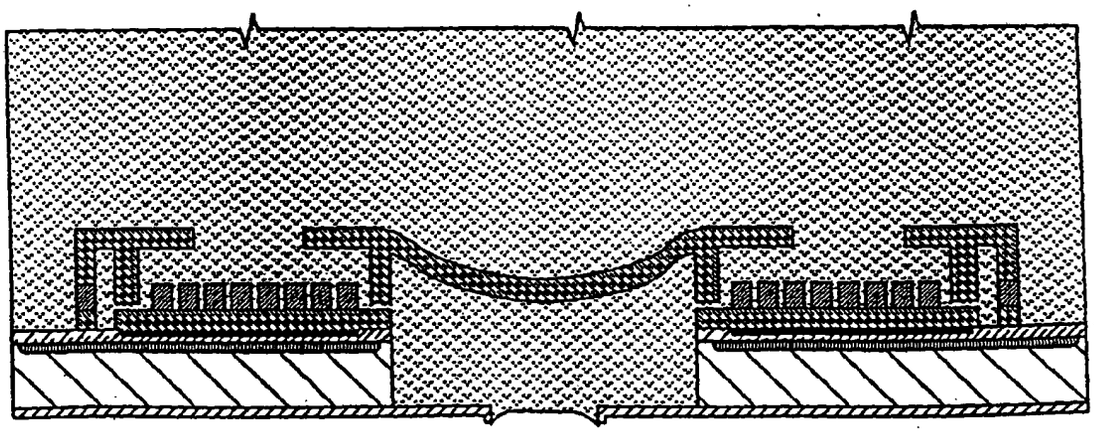

FIG. 21

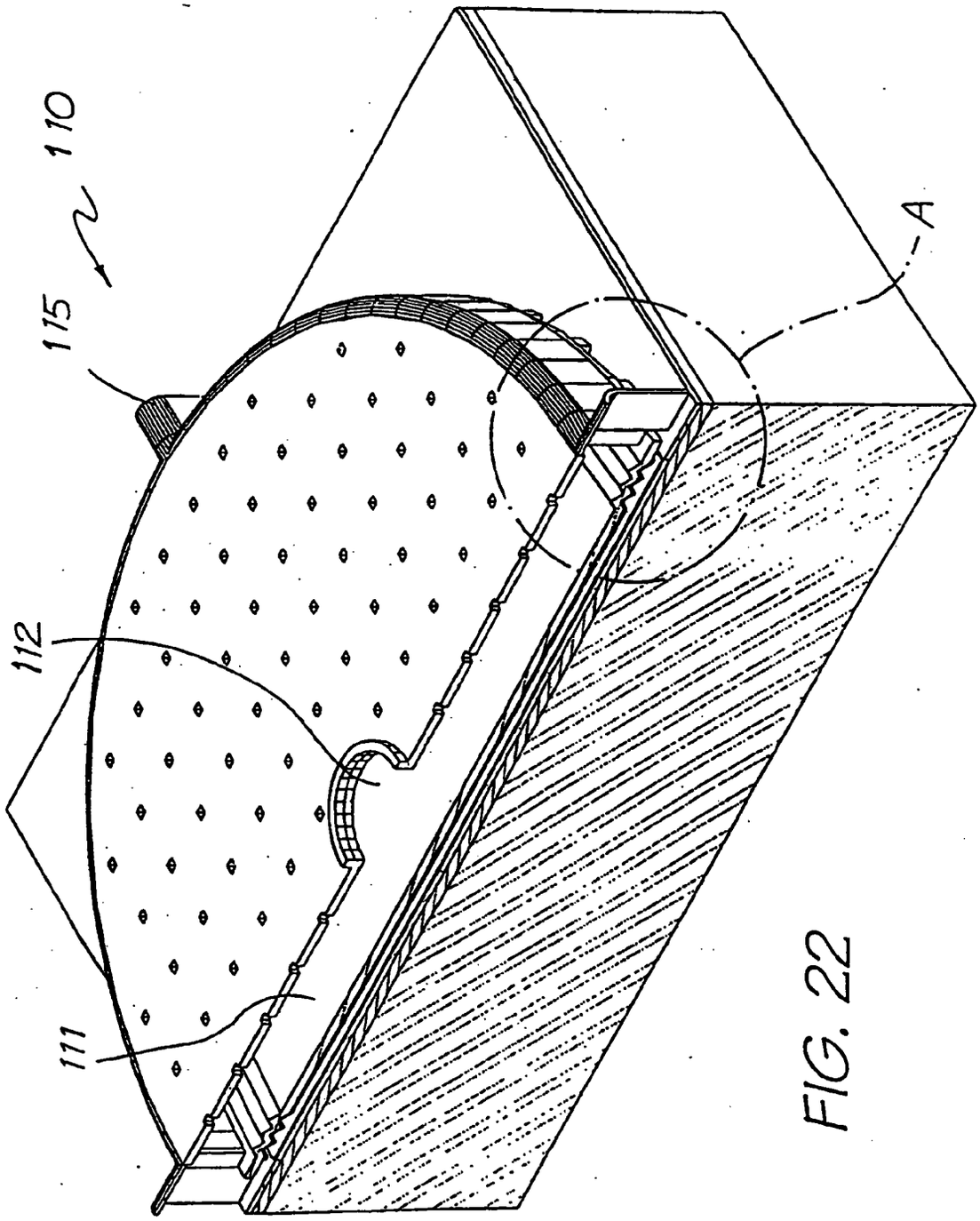

FIG. 22

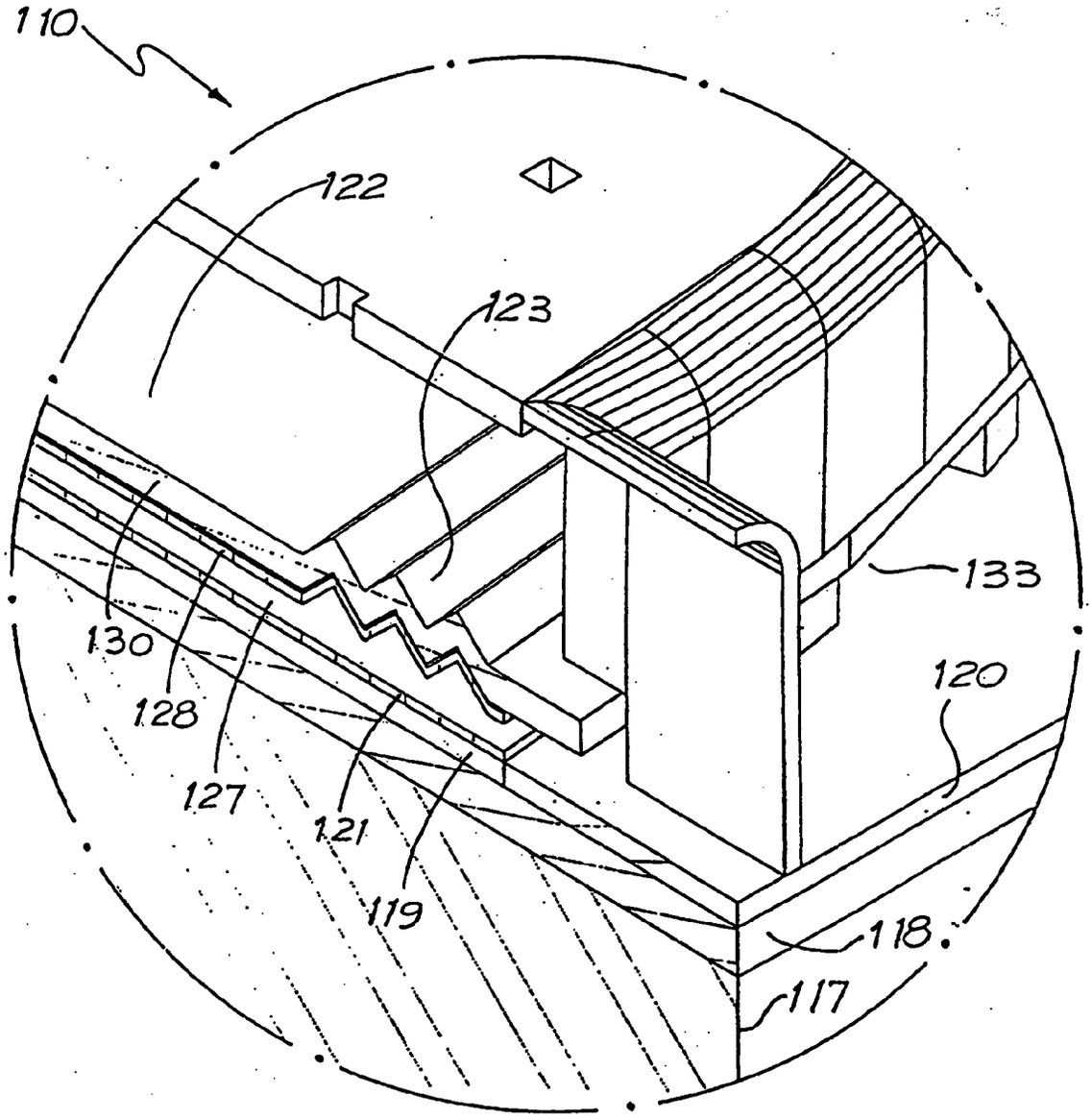

FIG. 23

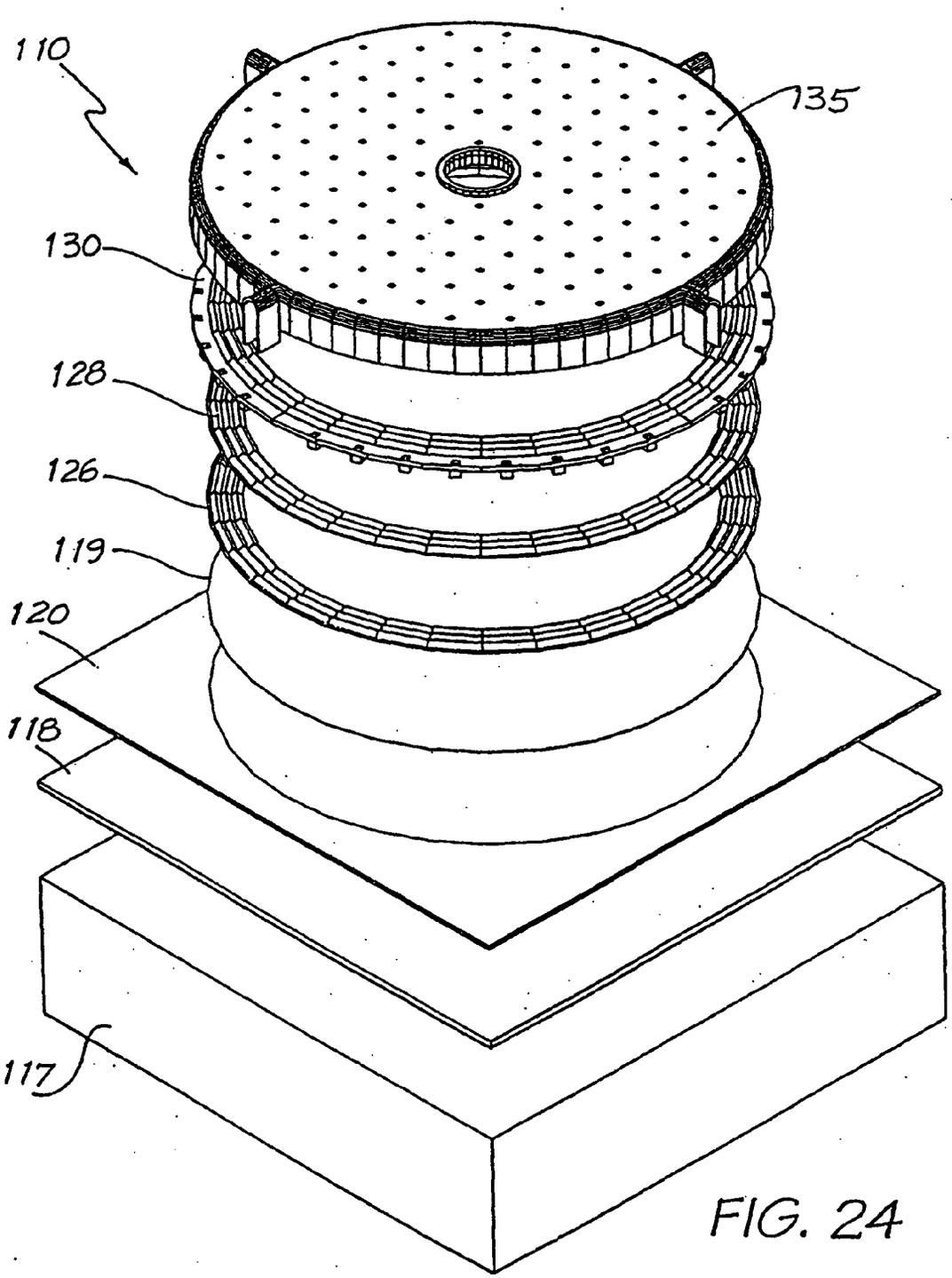

FIG. 24

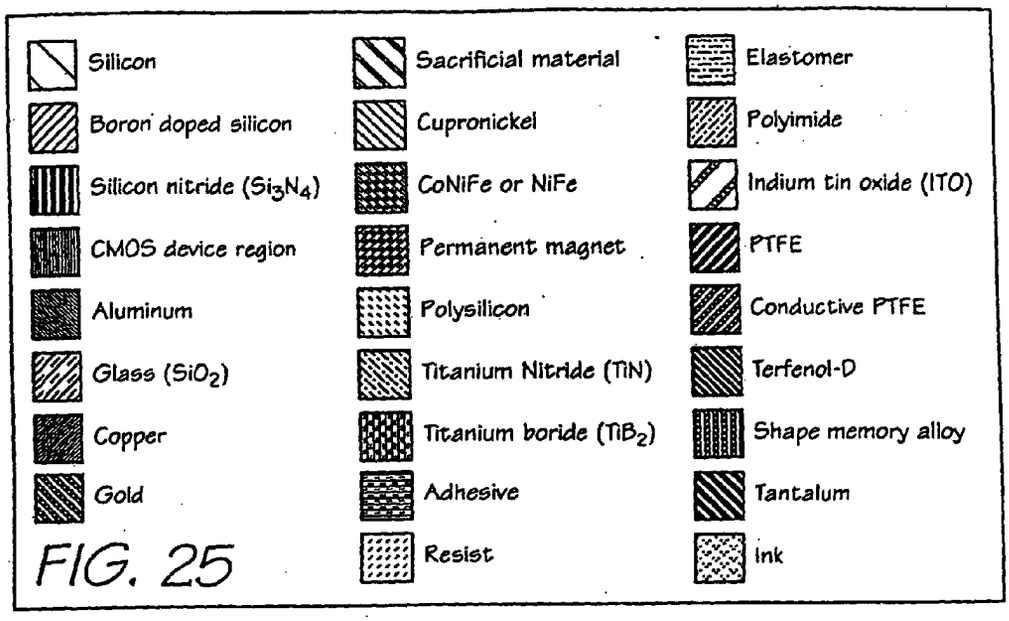

FIG. 25

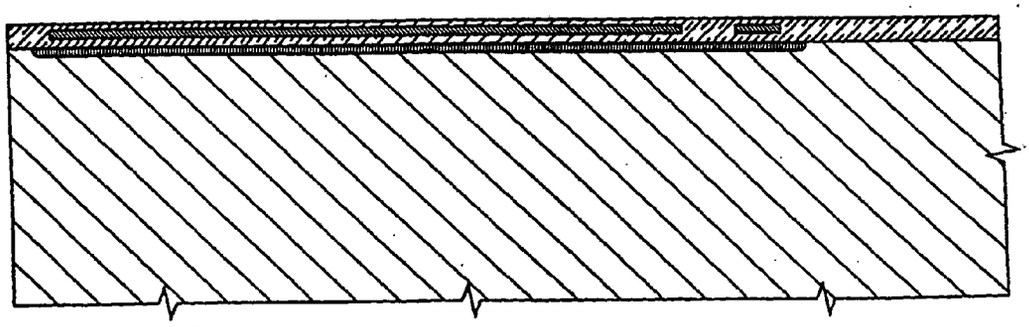

FIG. 26

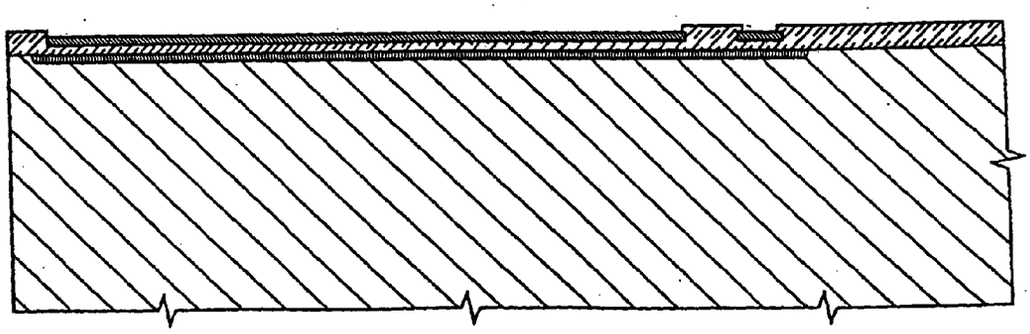

FIG. 27

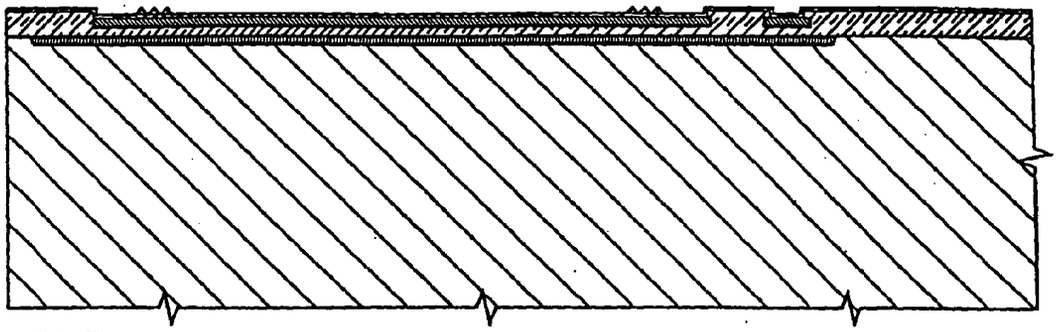

FIG. 28

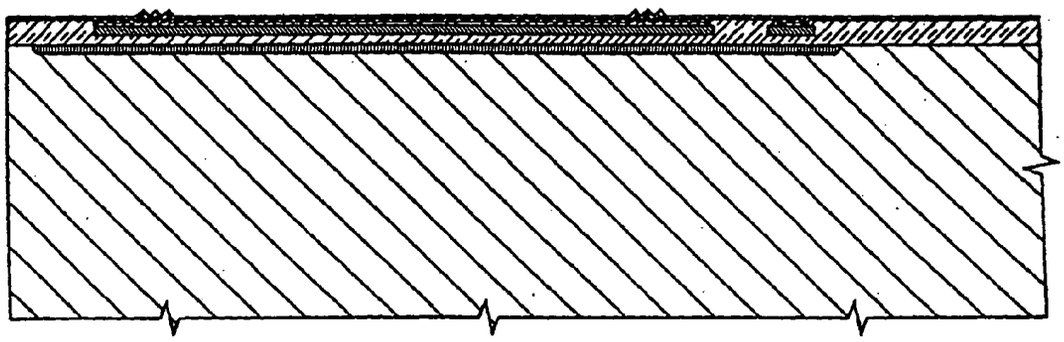

FIG. 29

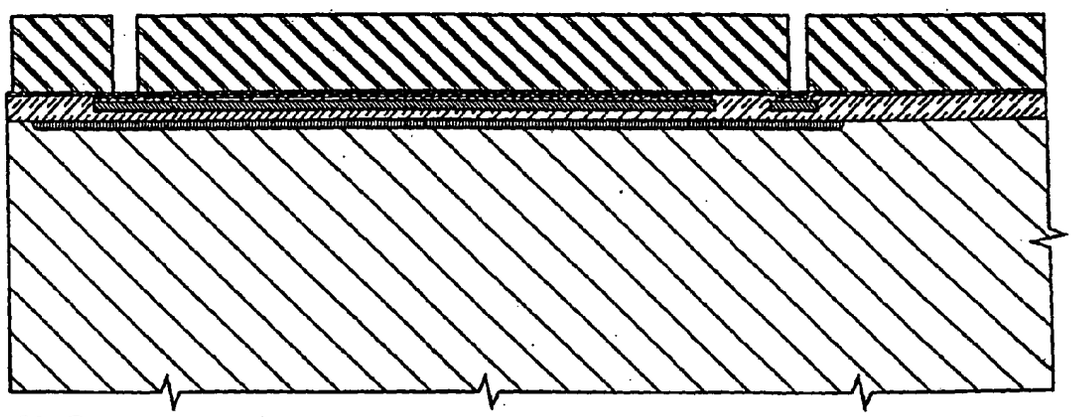

FIG. 30

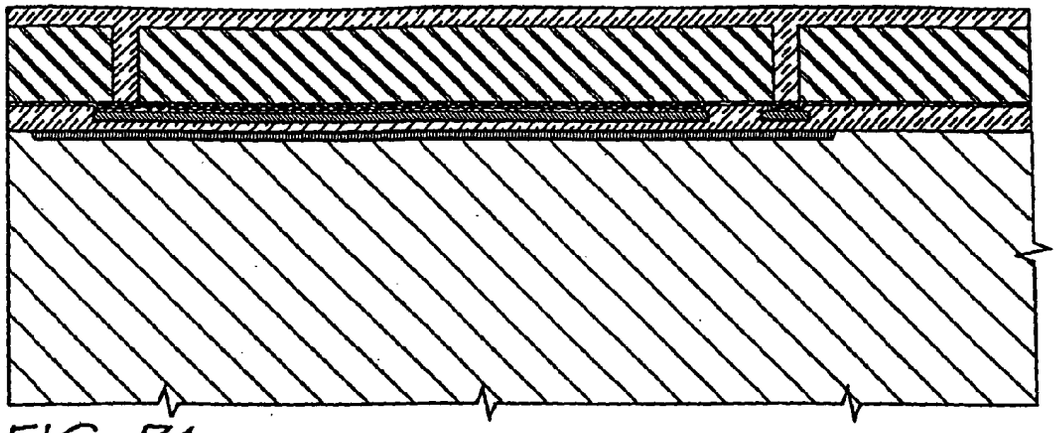

FIG. 31

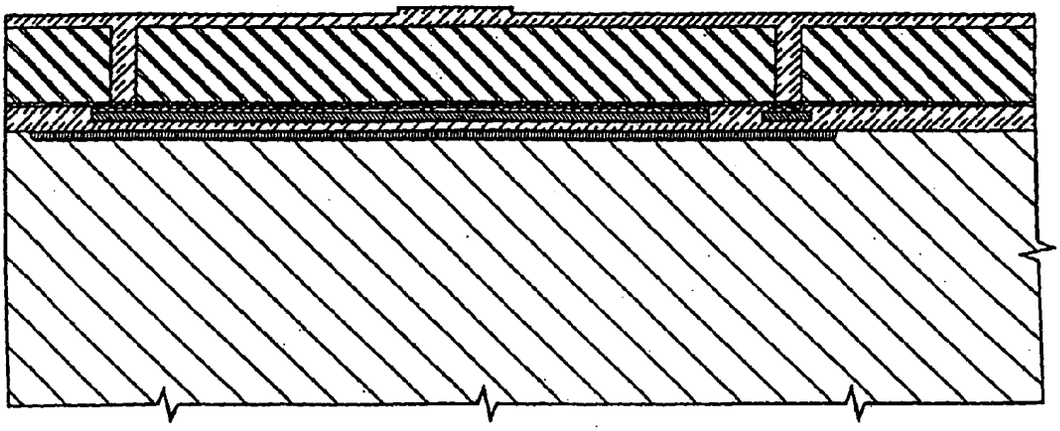

FIG. 32

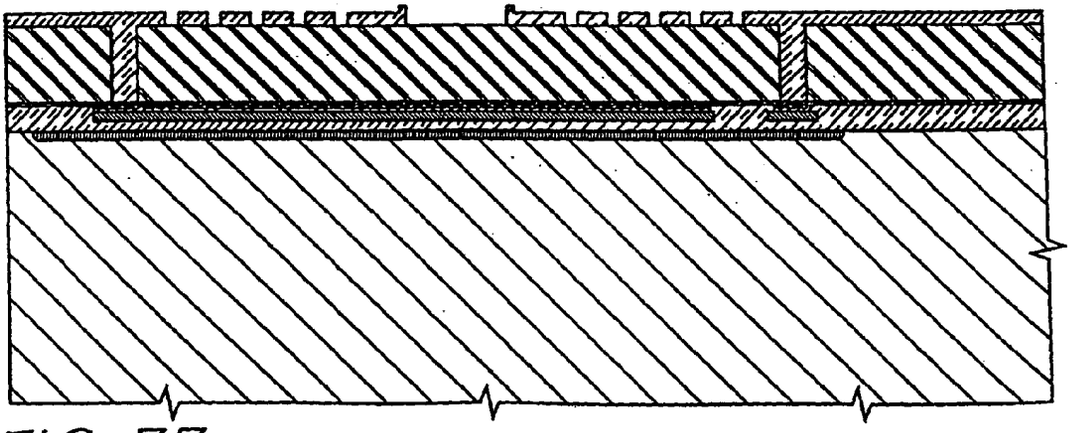

FIG. 33

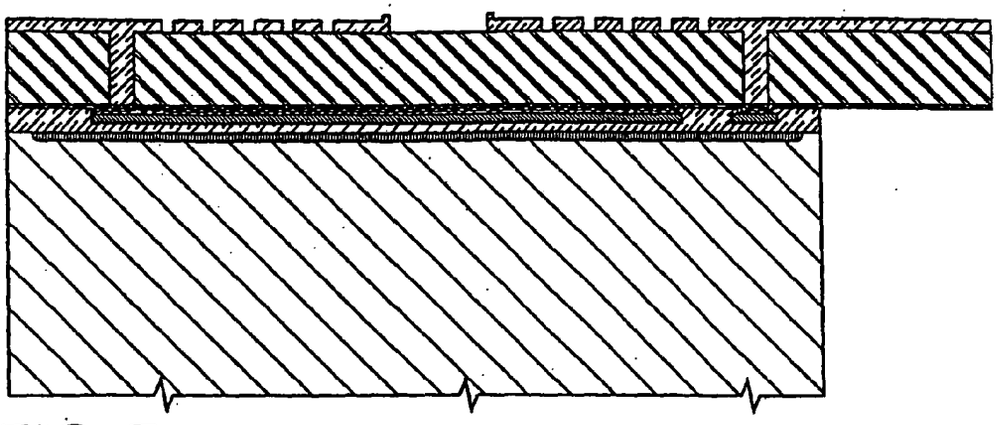

FIG. 34

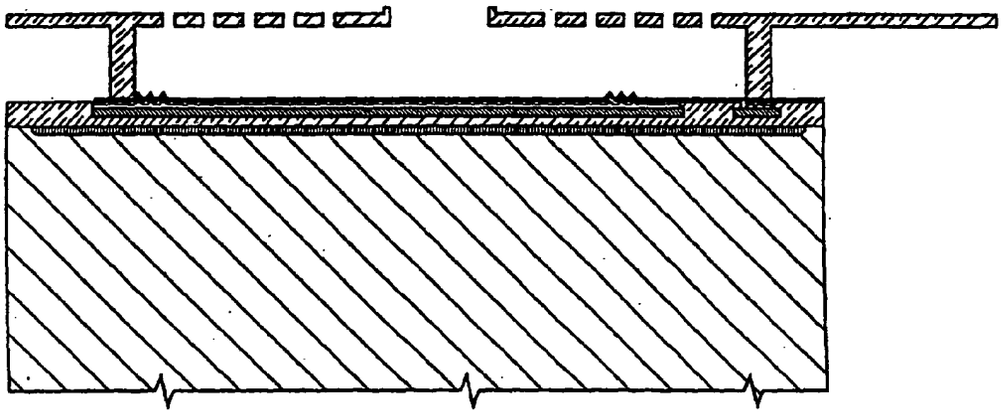

FIG. 35

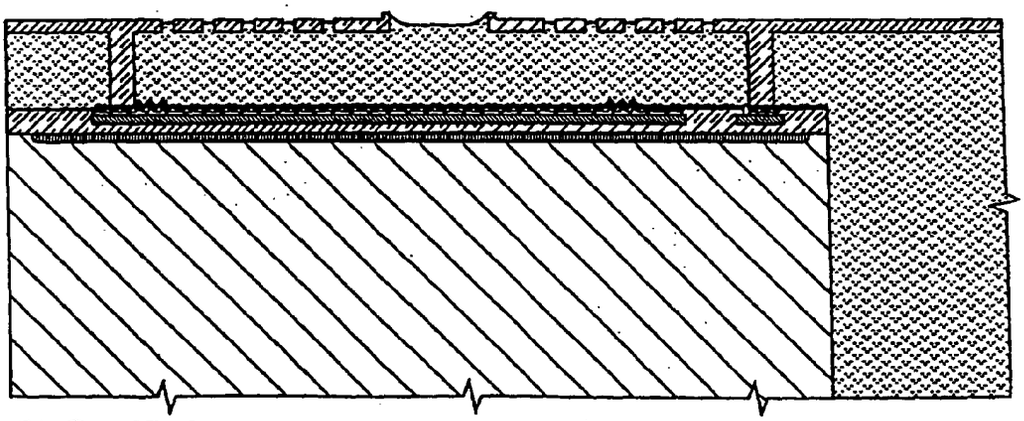

FIG. 36

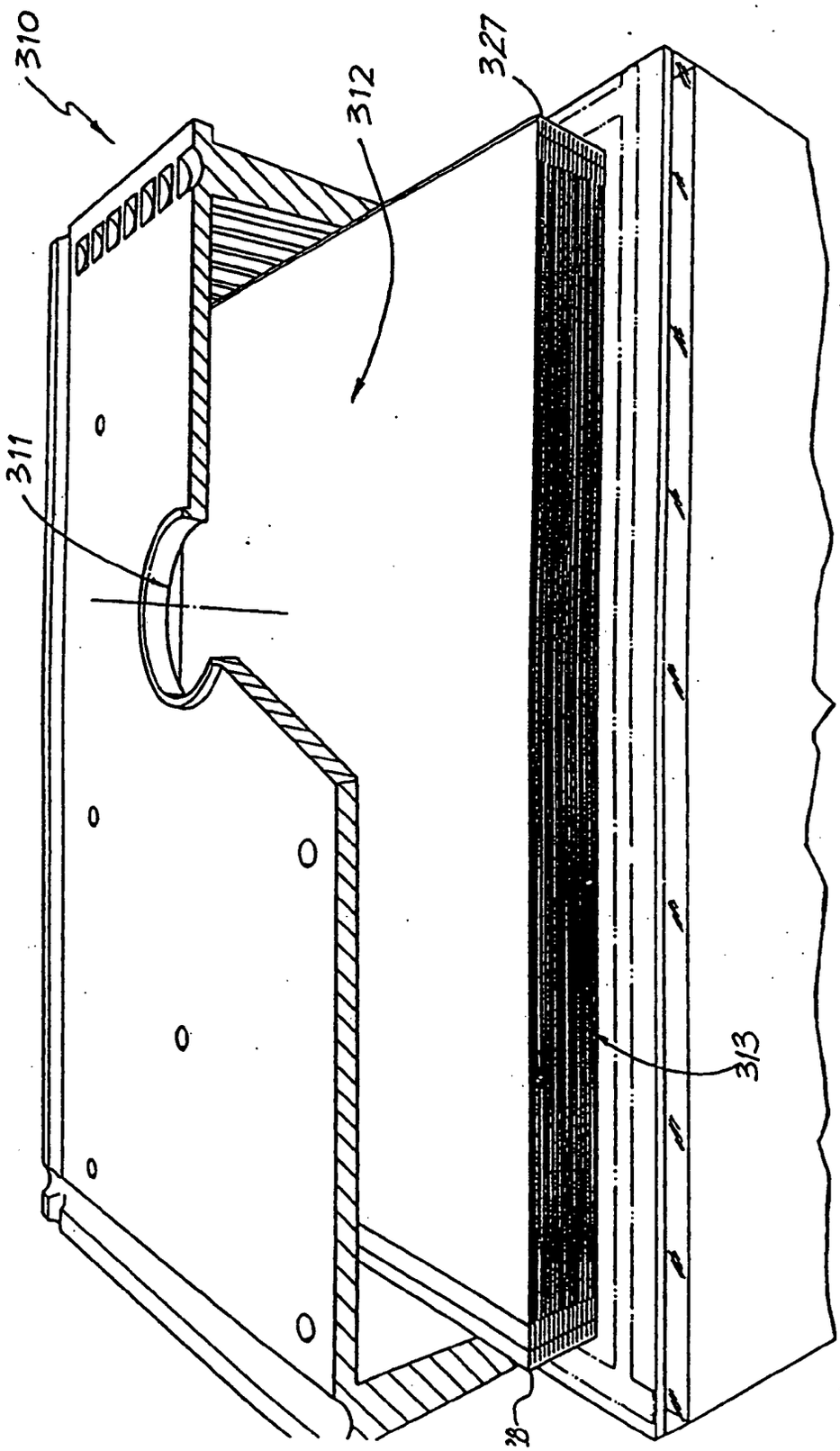

FIG. 37

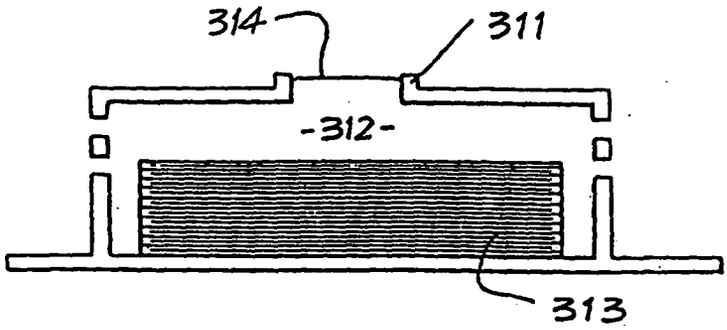

FIG. 38

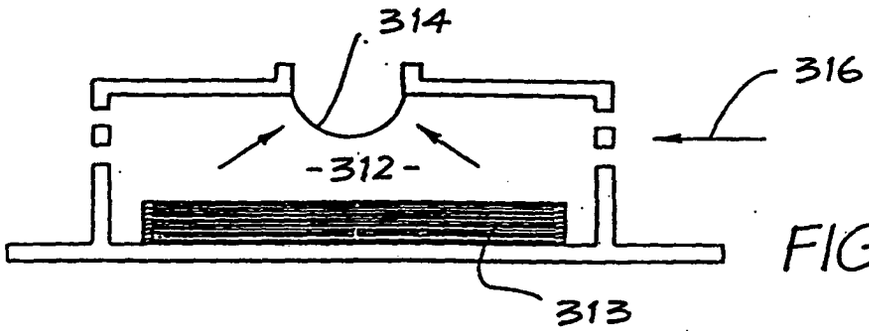

FIG. 39

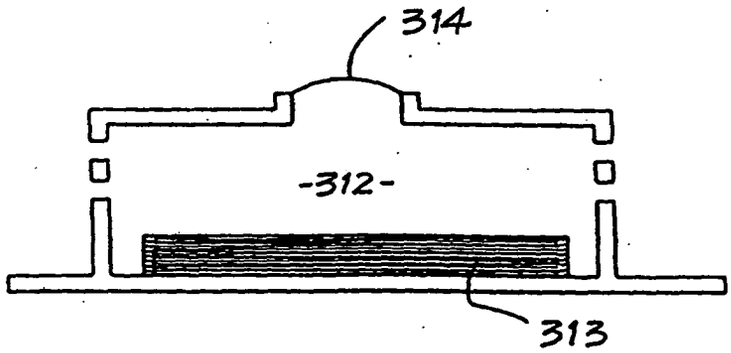

FIG. 40

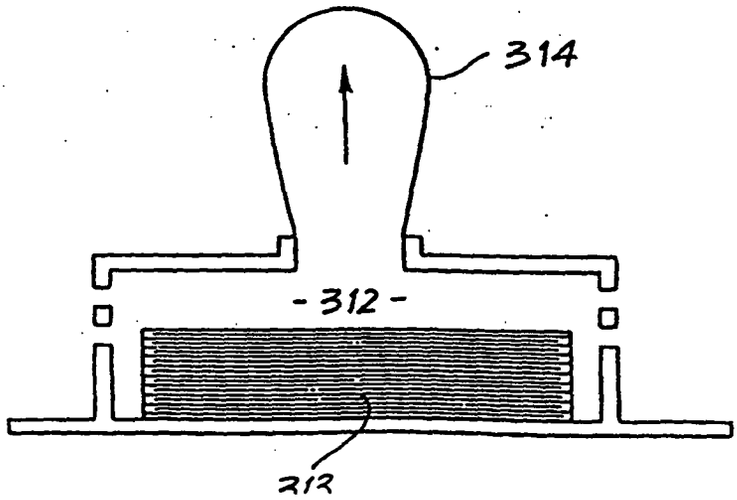

FIG. 41

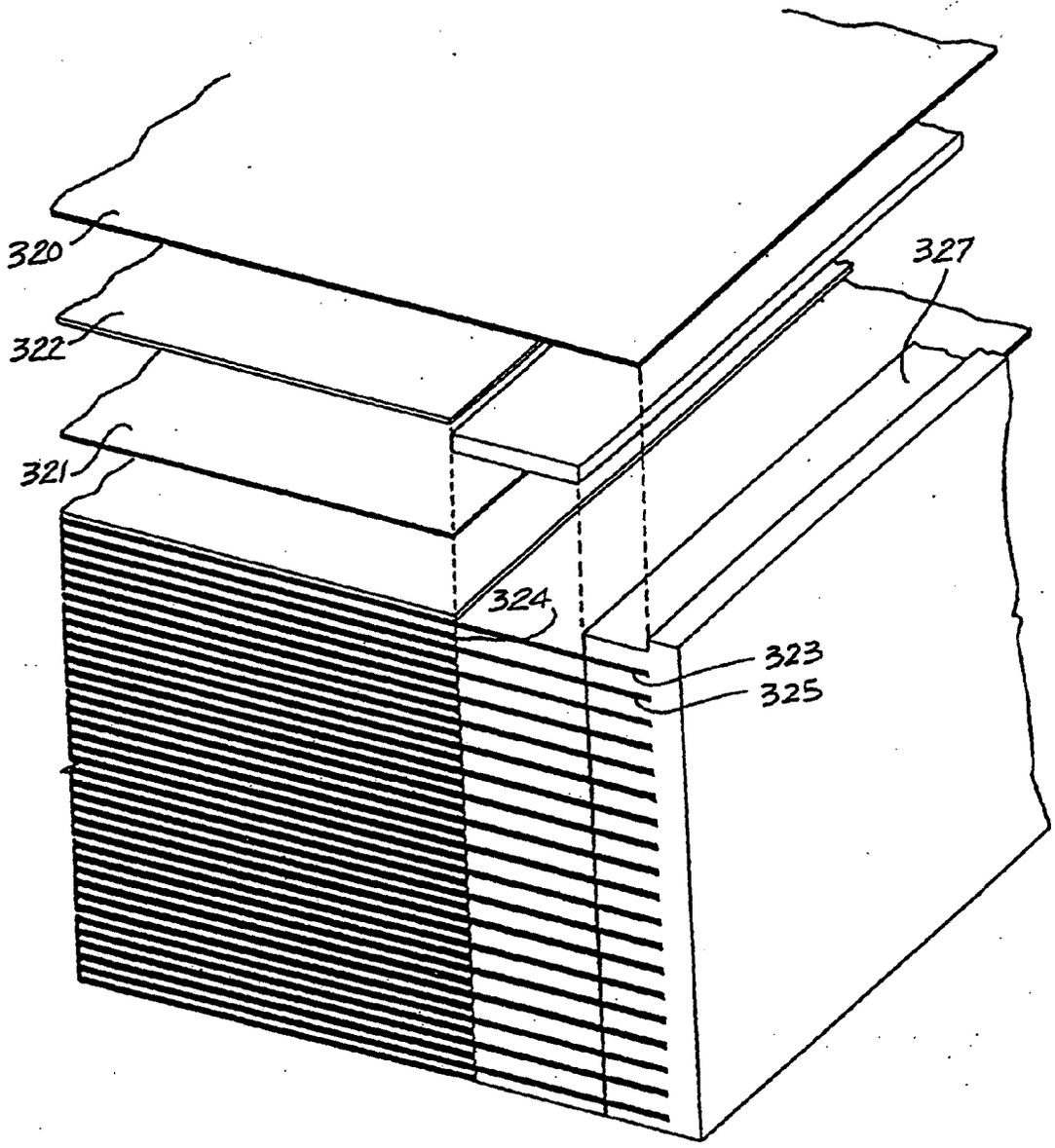

FIG. 42

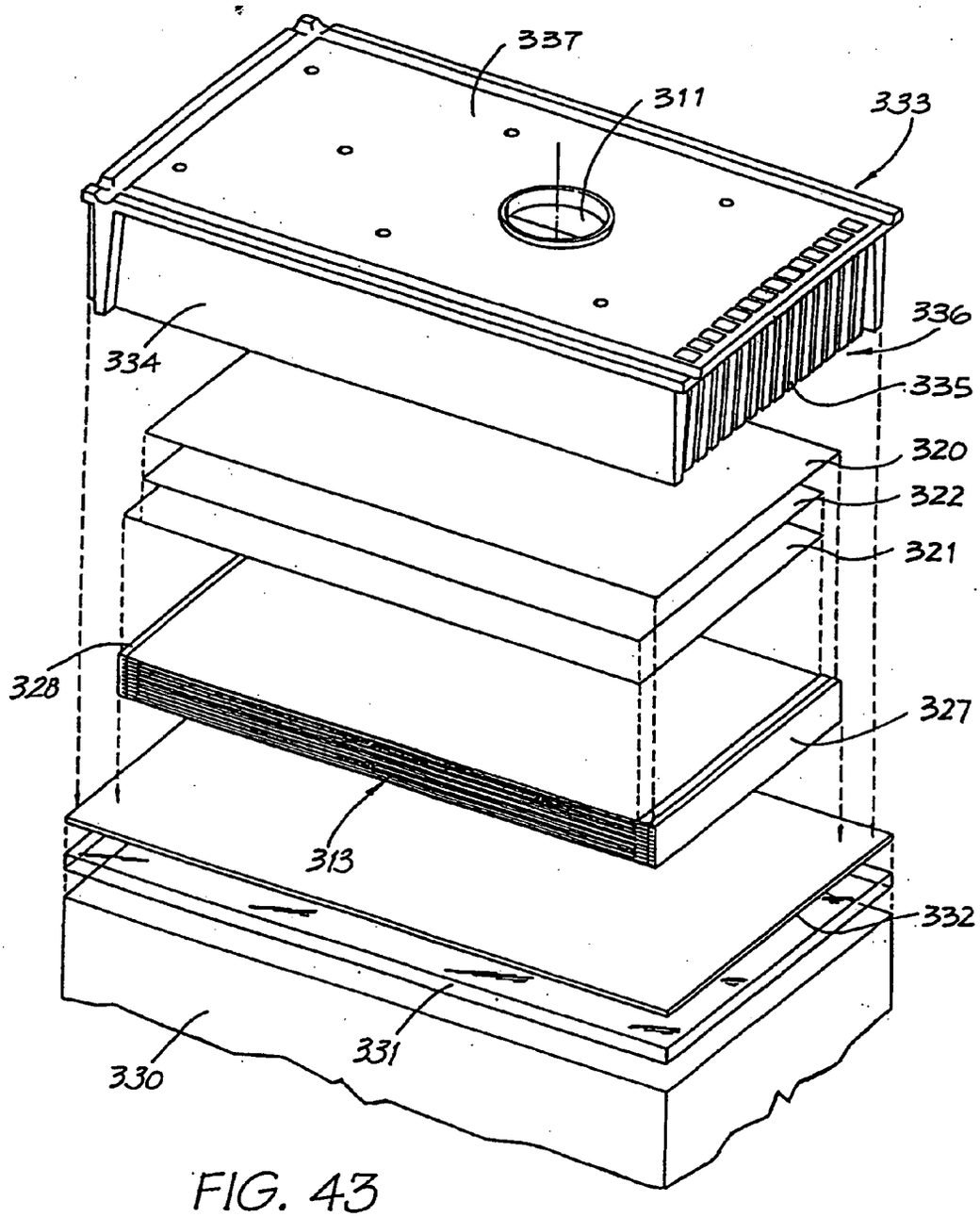

FIG. 43

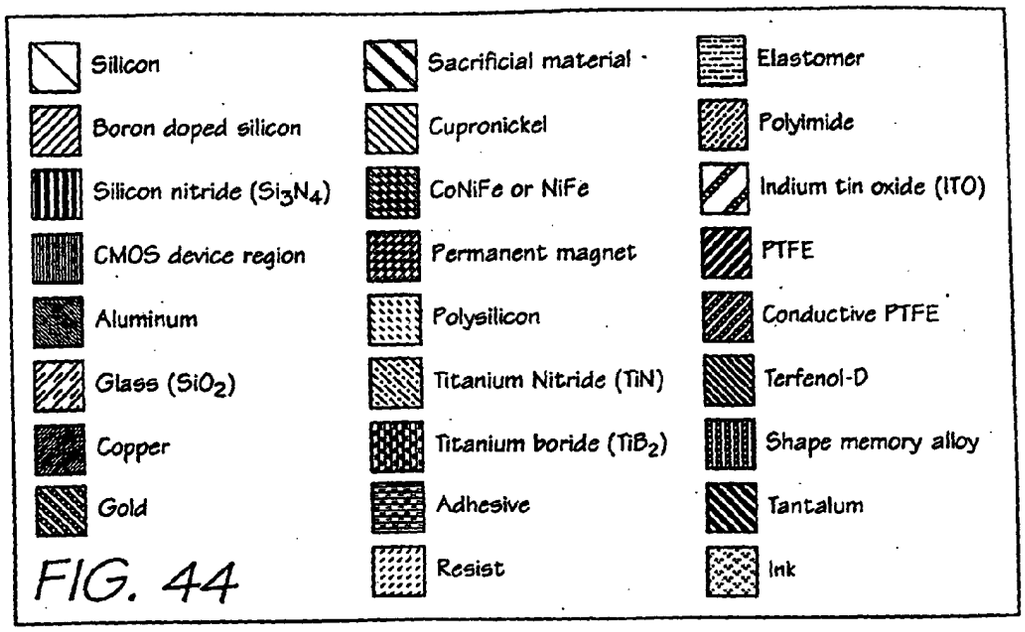

FIG. 44

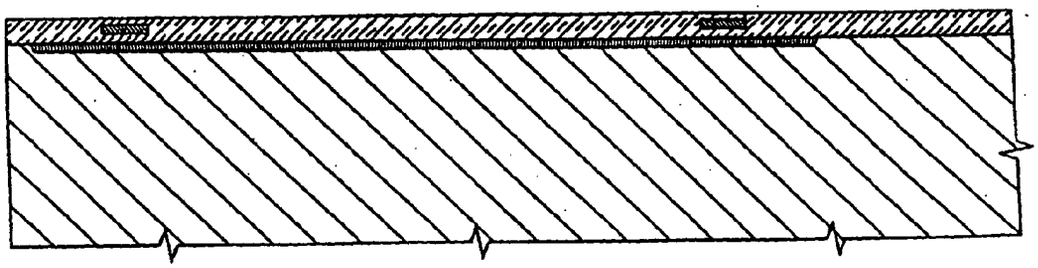

FIG. 45

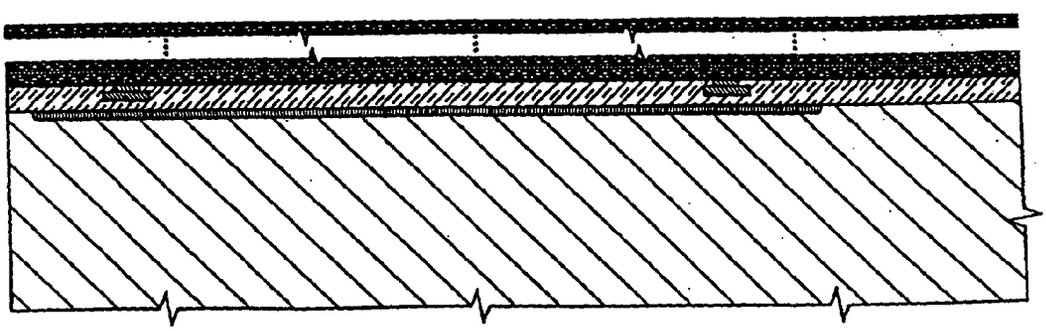

FIG. 46

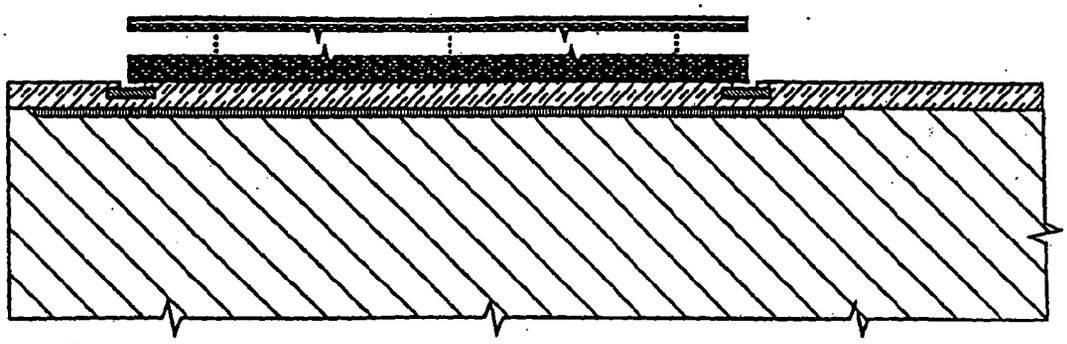

FIG. 47

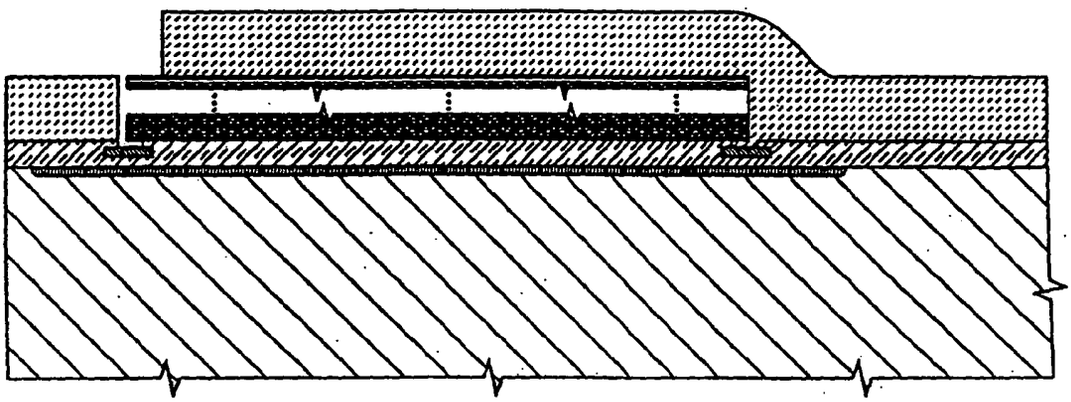

FIG. 48

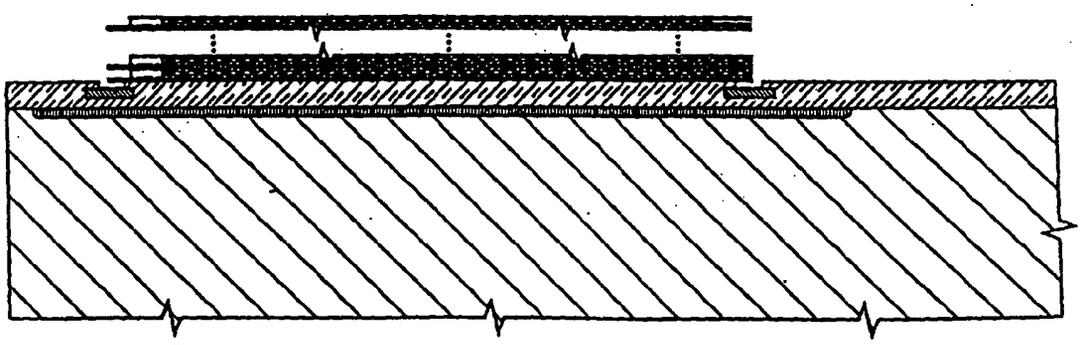

FIG. 49

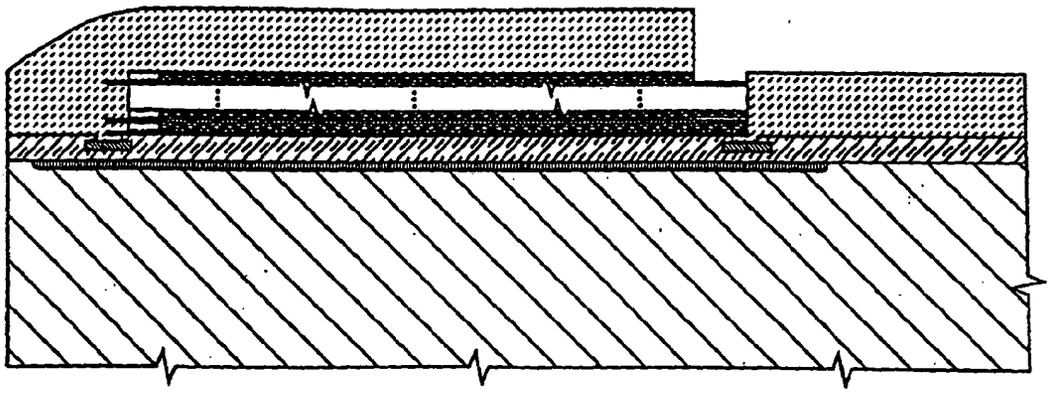

FIG. 50

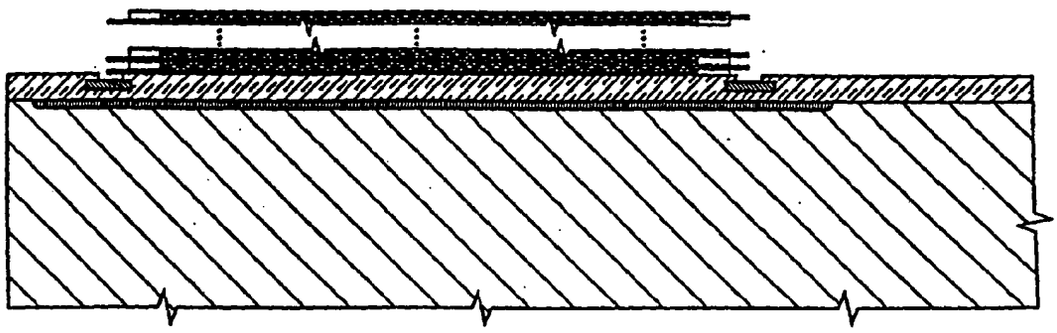

FIG. 51

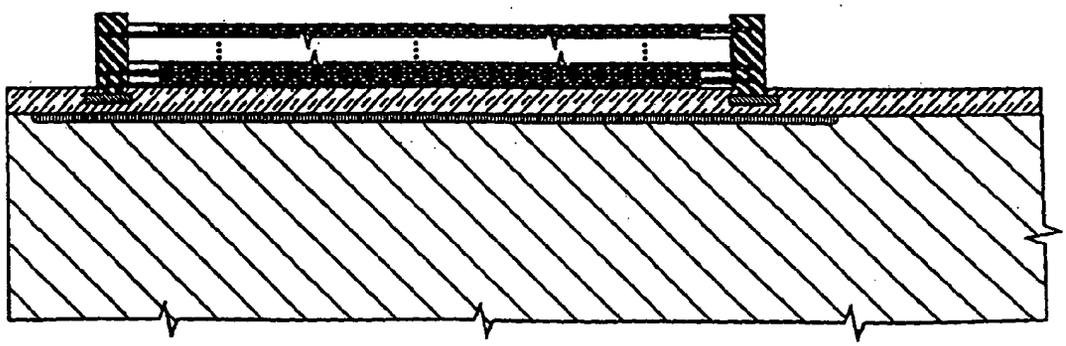

FIG. 52

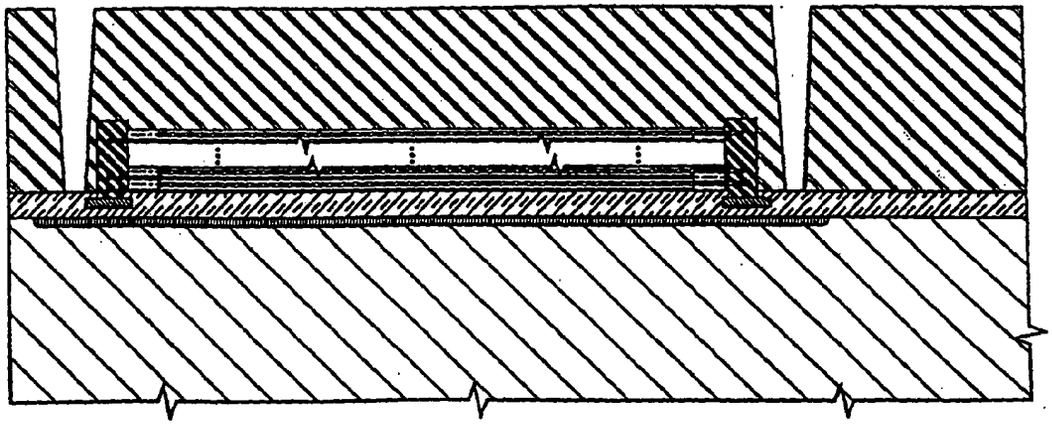

FIG. 53

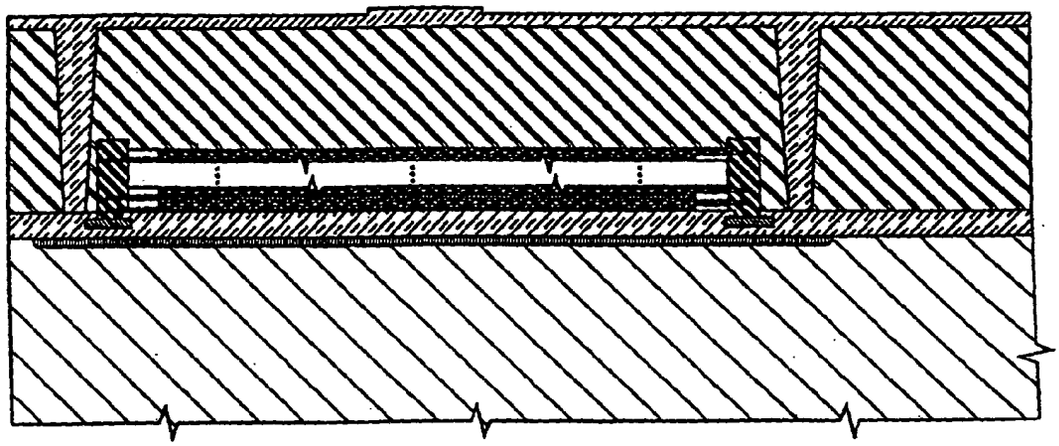

FIG. 54

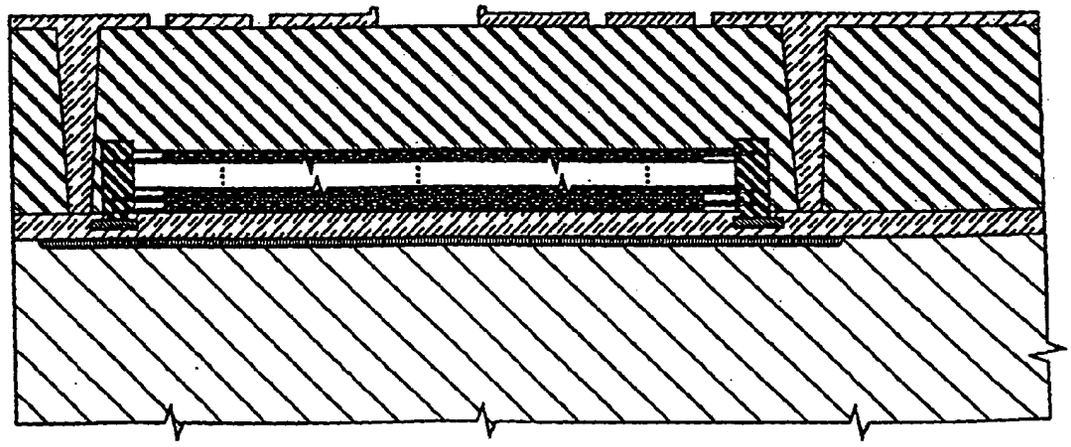

FIG. 55

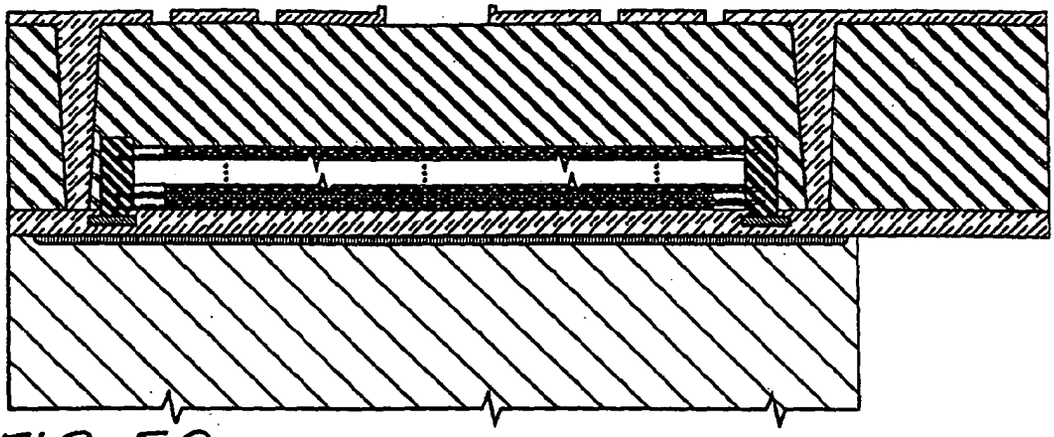

FIG. 56

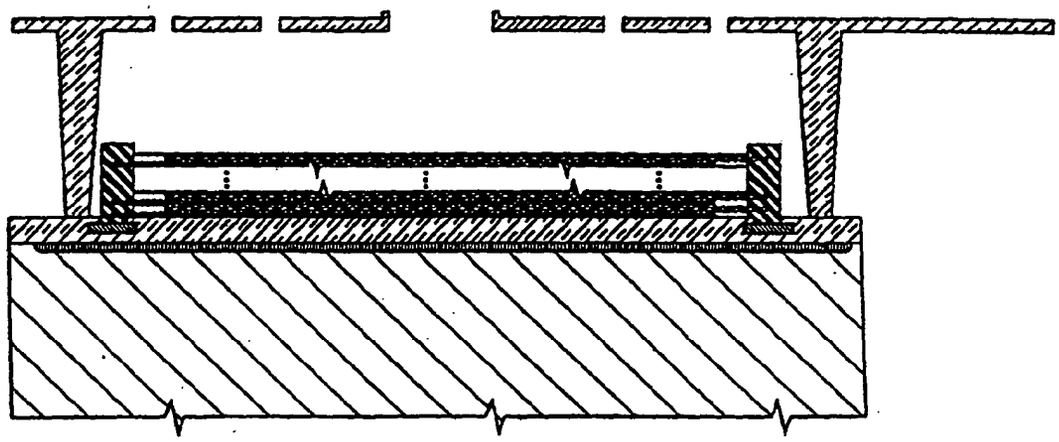

FIG. 57

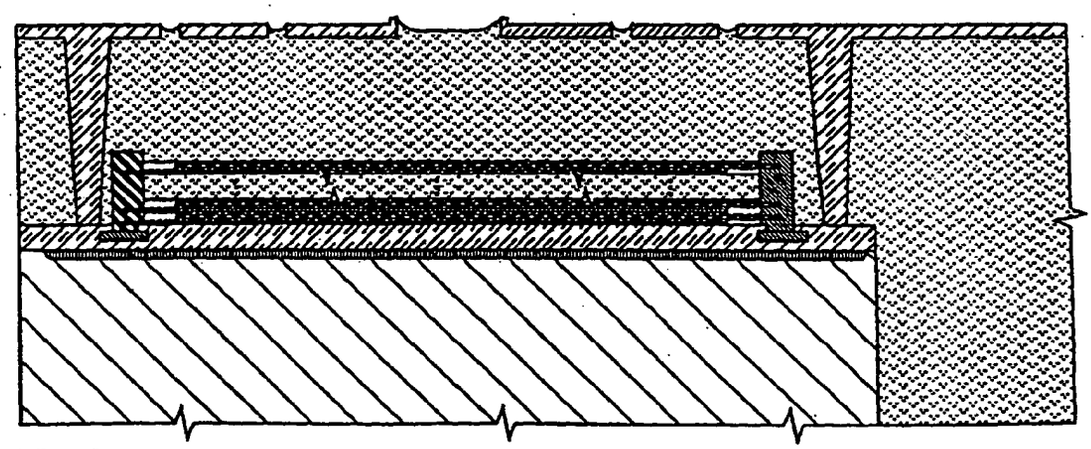

FIG. 58

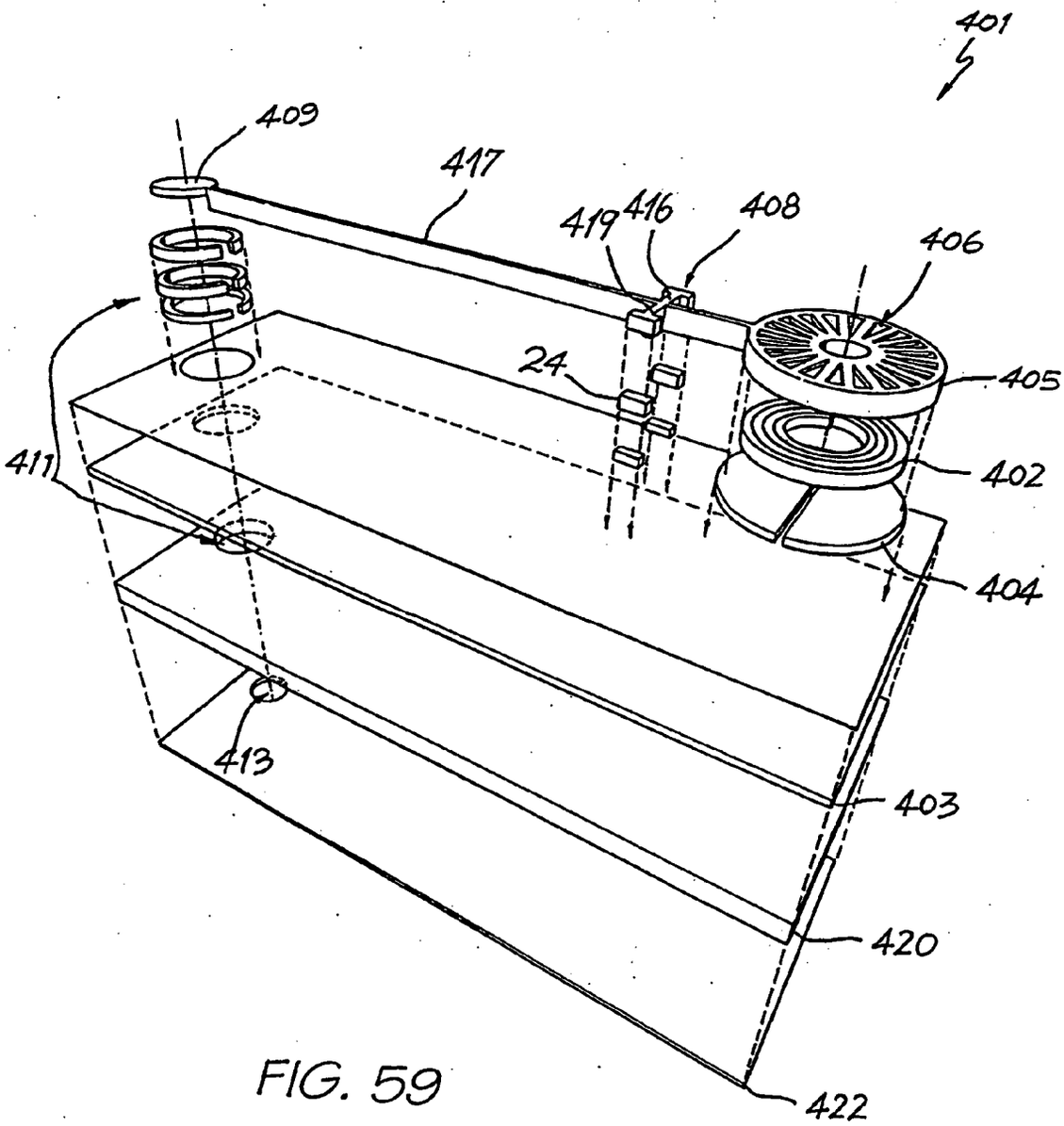

FIG. 59

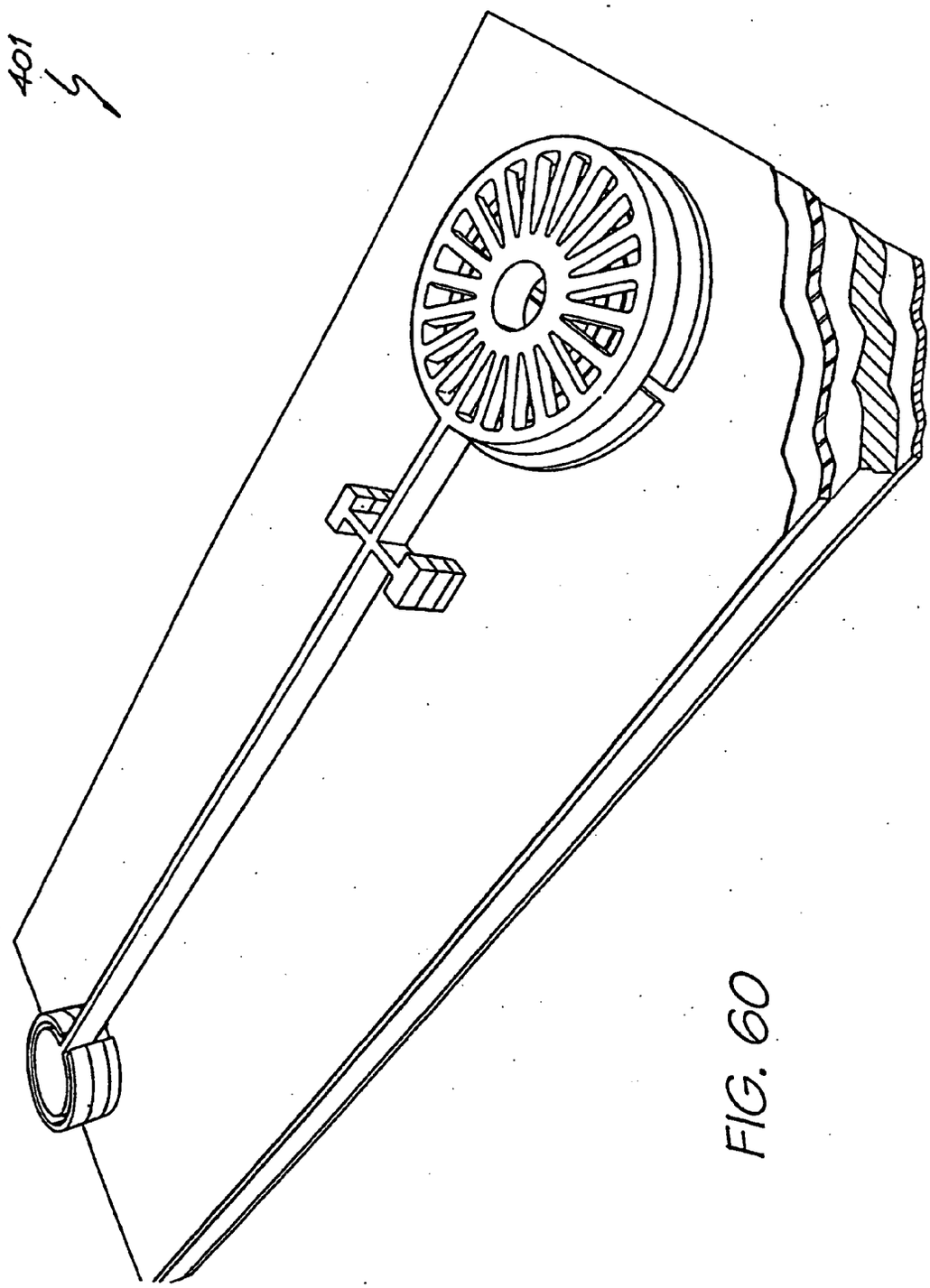

FIG. 60

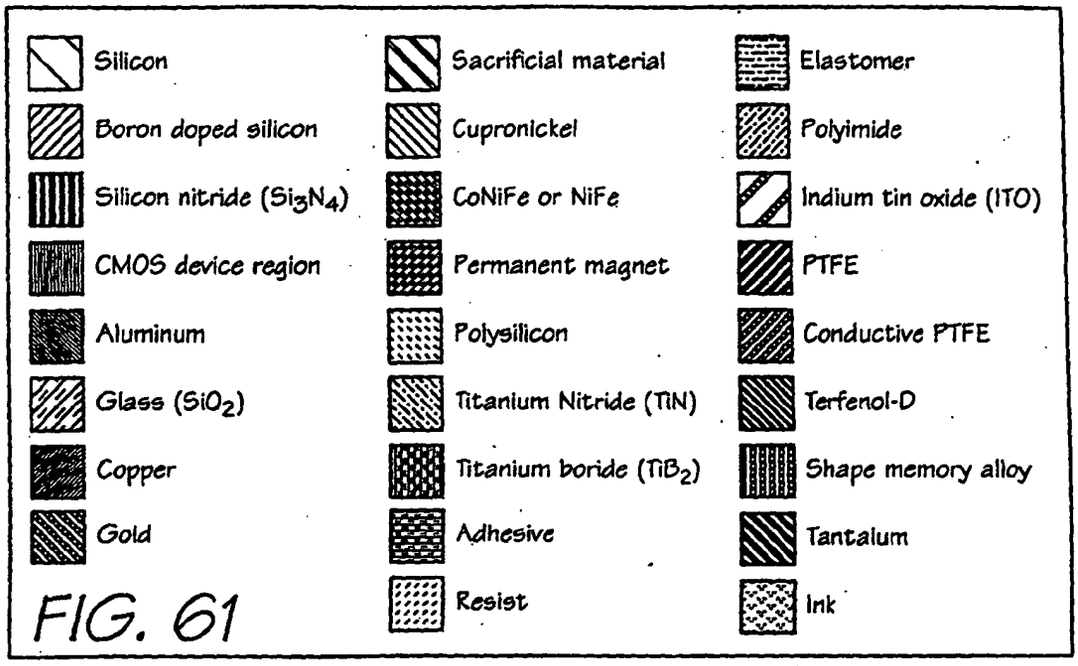

FIG. 61

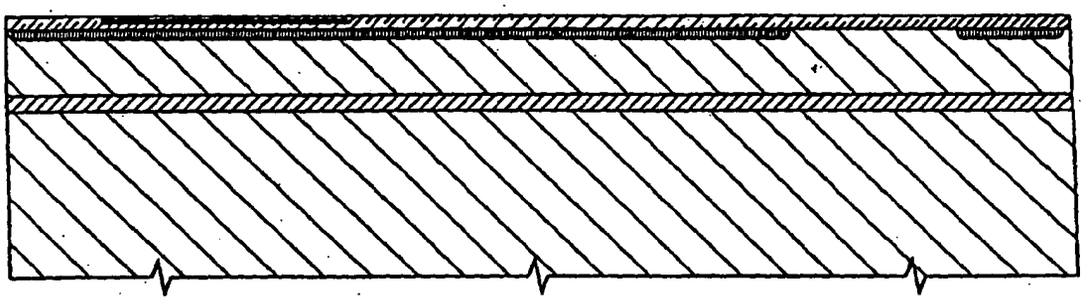

FIG. 62

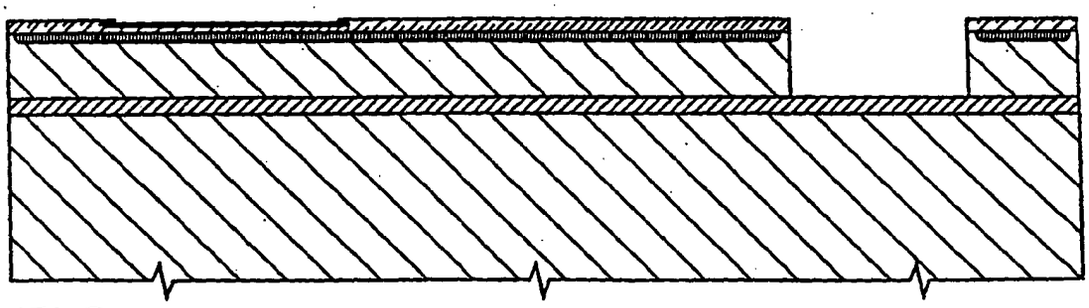

FIG. 63

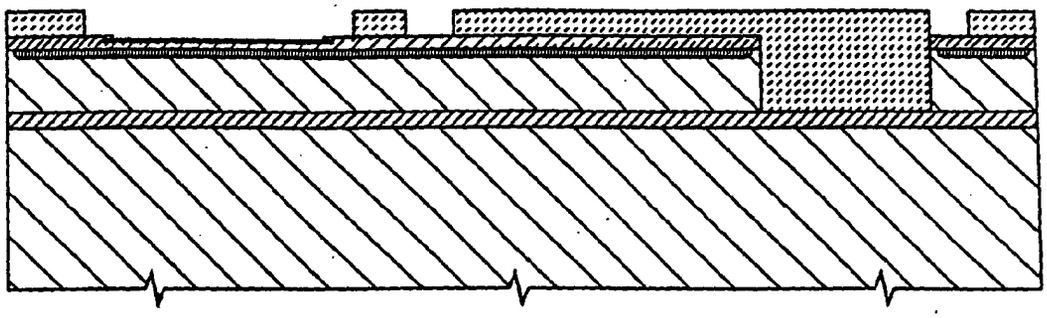

FIG. 64

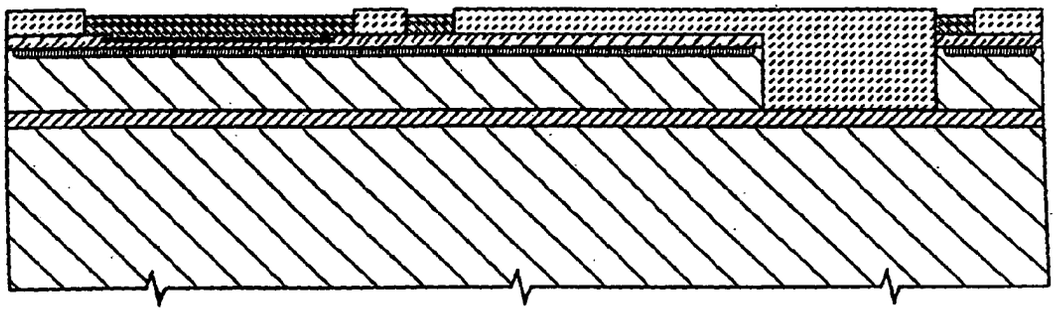

FIG. 65

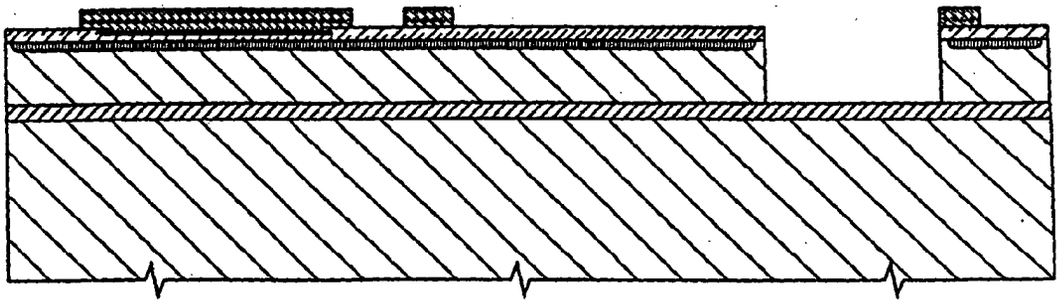

FIG. 66

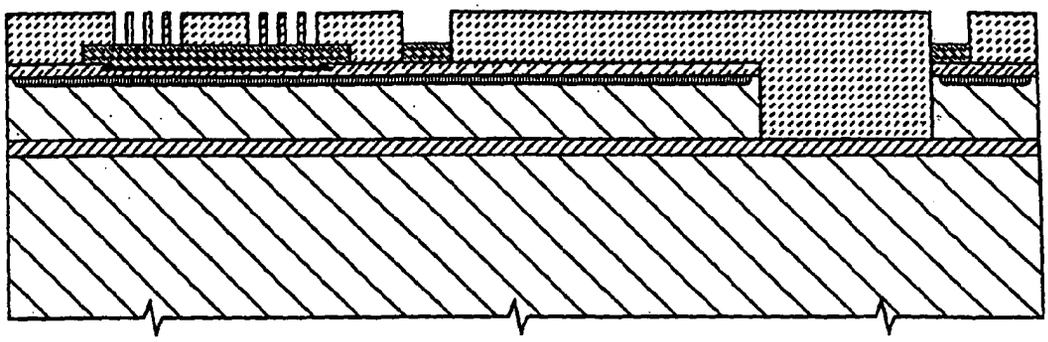

FIG. 67

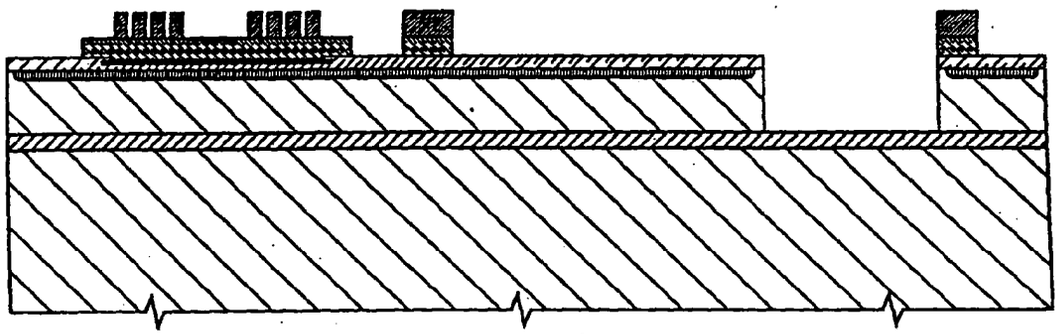

FIG. 68

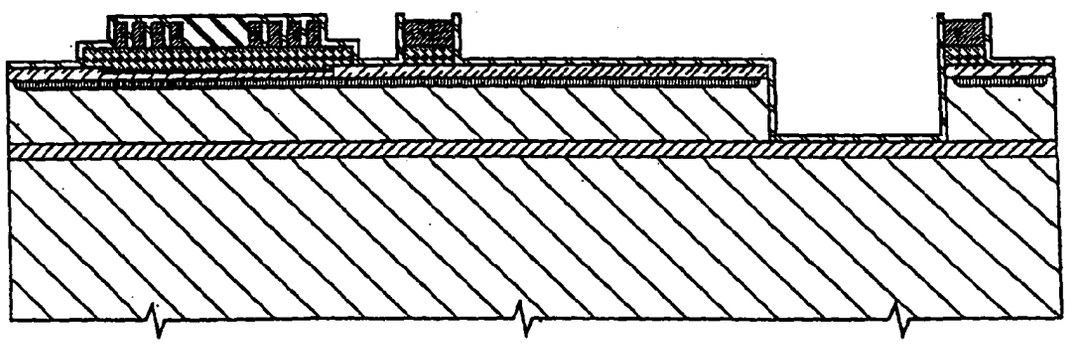

FIG. 69

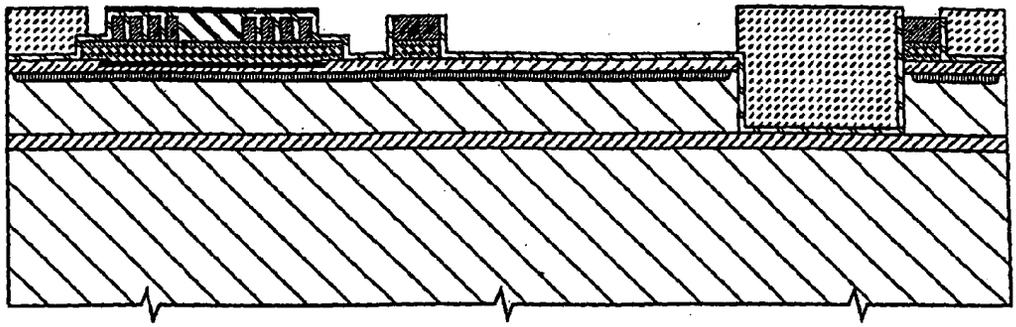

FIG. 70

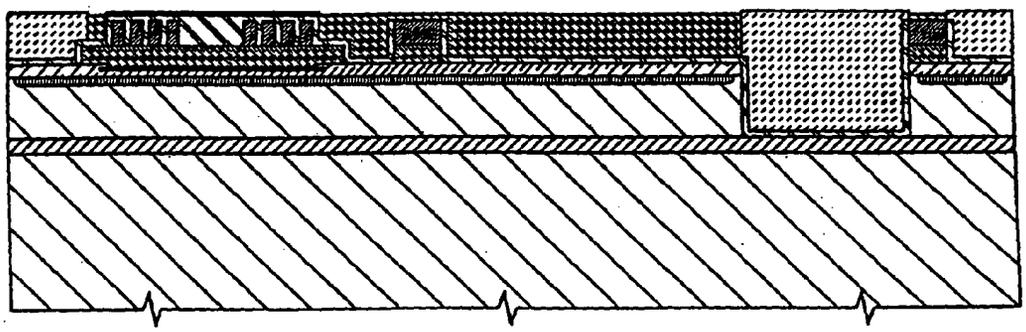

FIG. 71

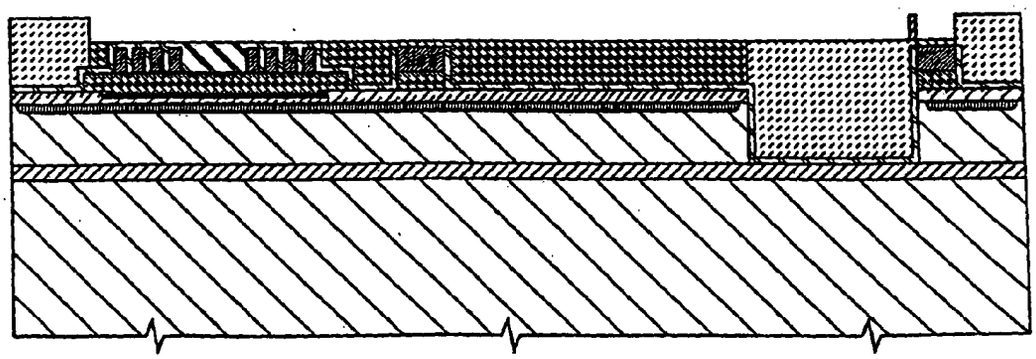

FIG. 72

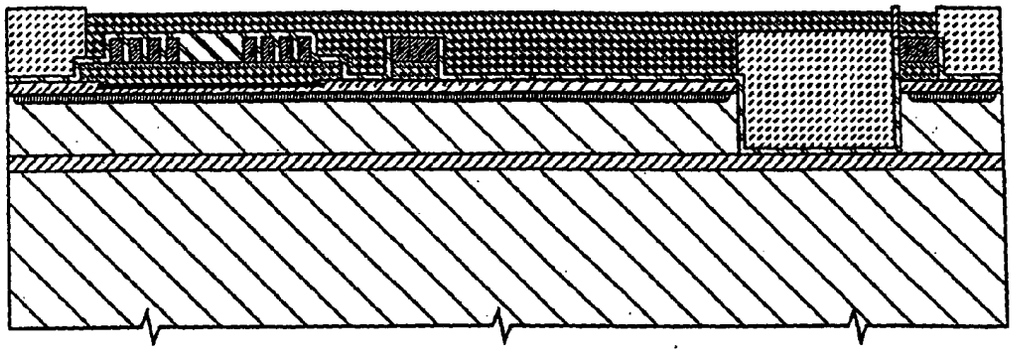

FIG. 73

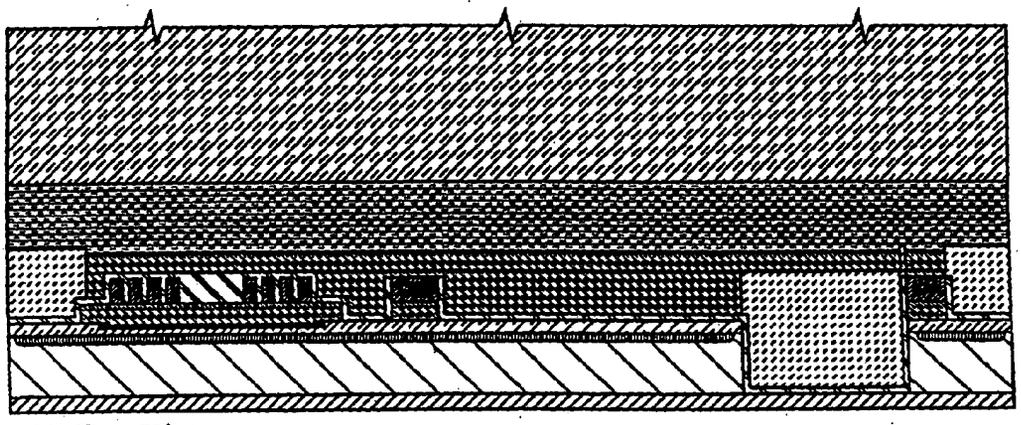

FIG. 74

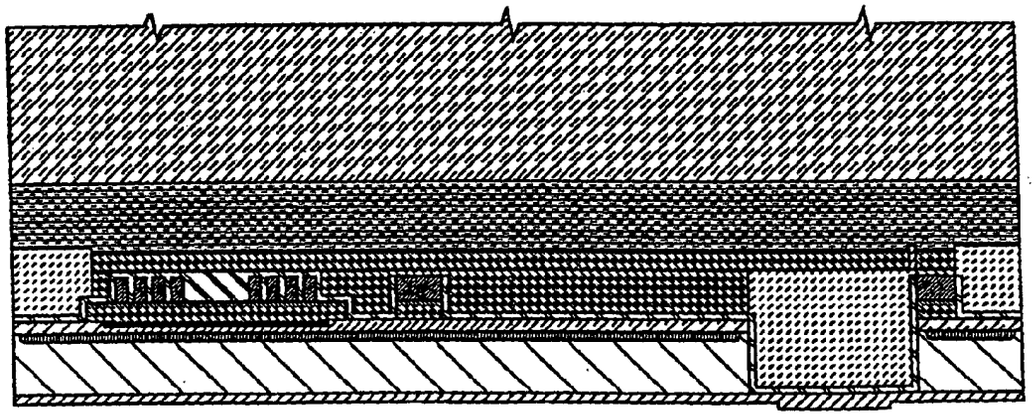

FIG. 75

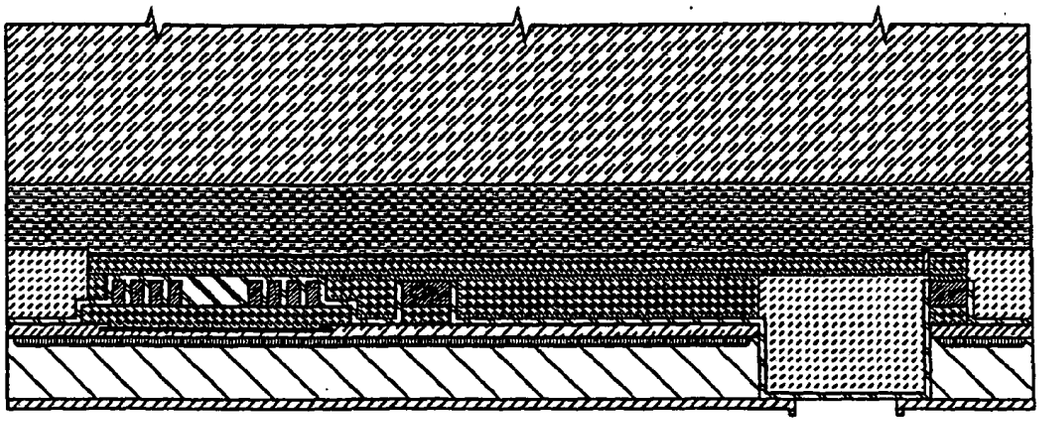

FIG. 76

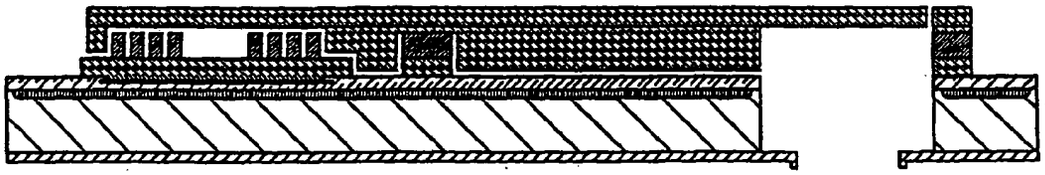

FIG. 77

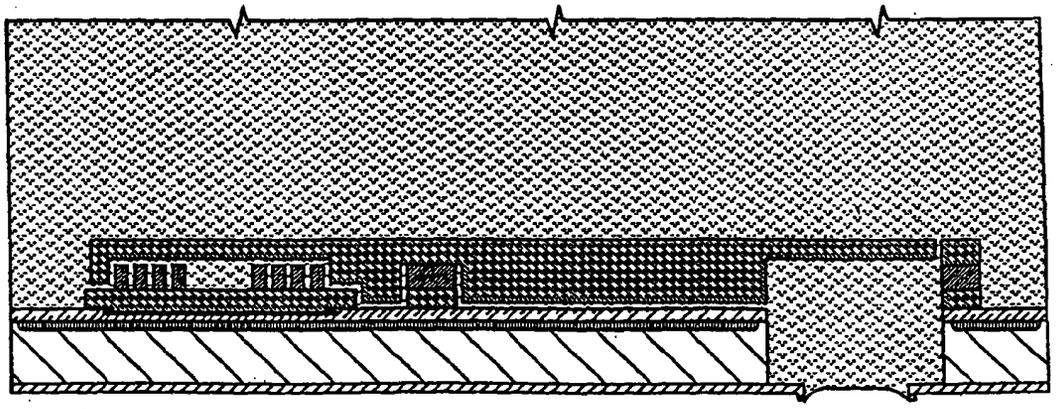

FIG. 78

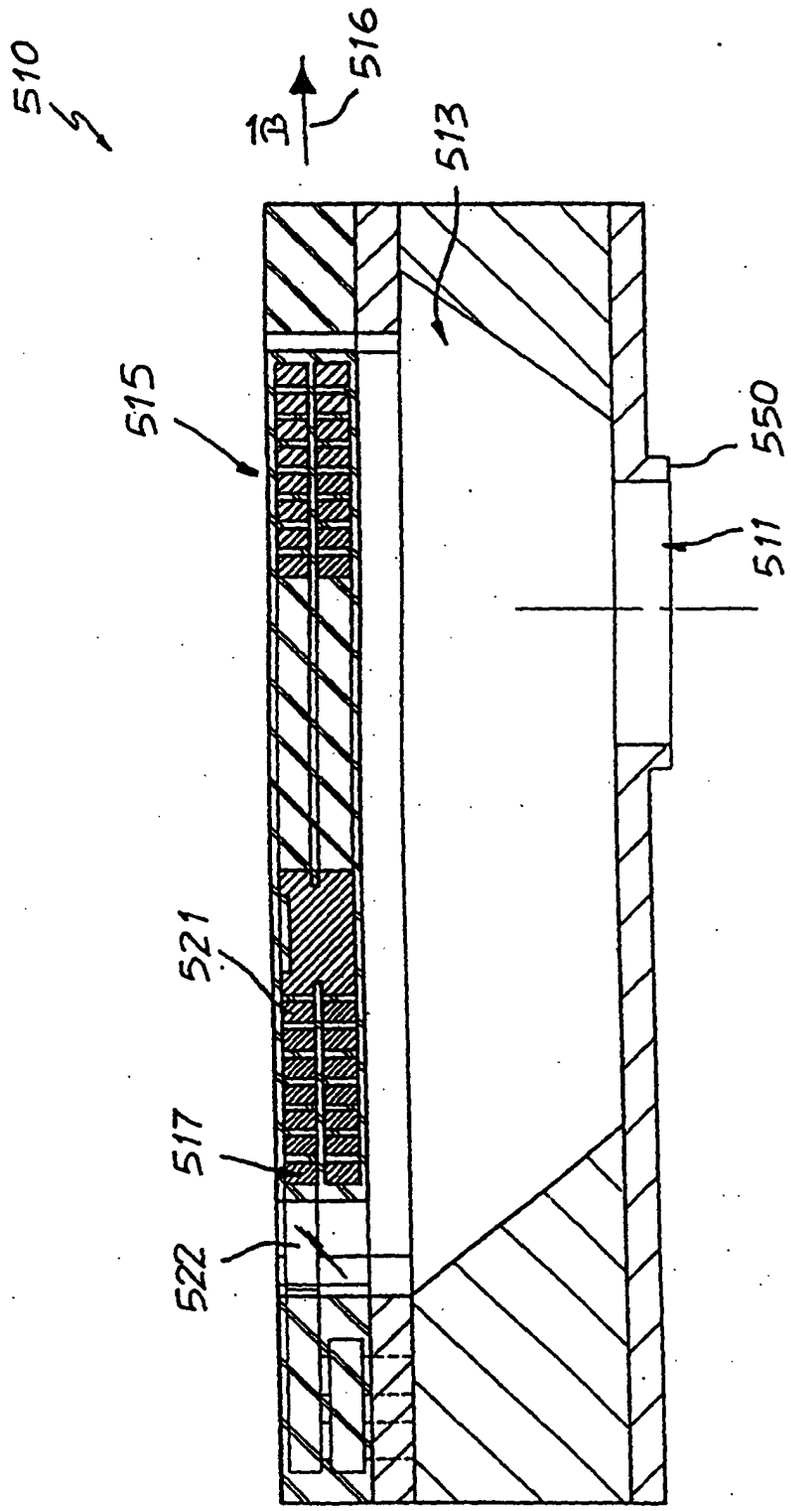

FIG. 79

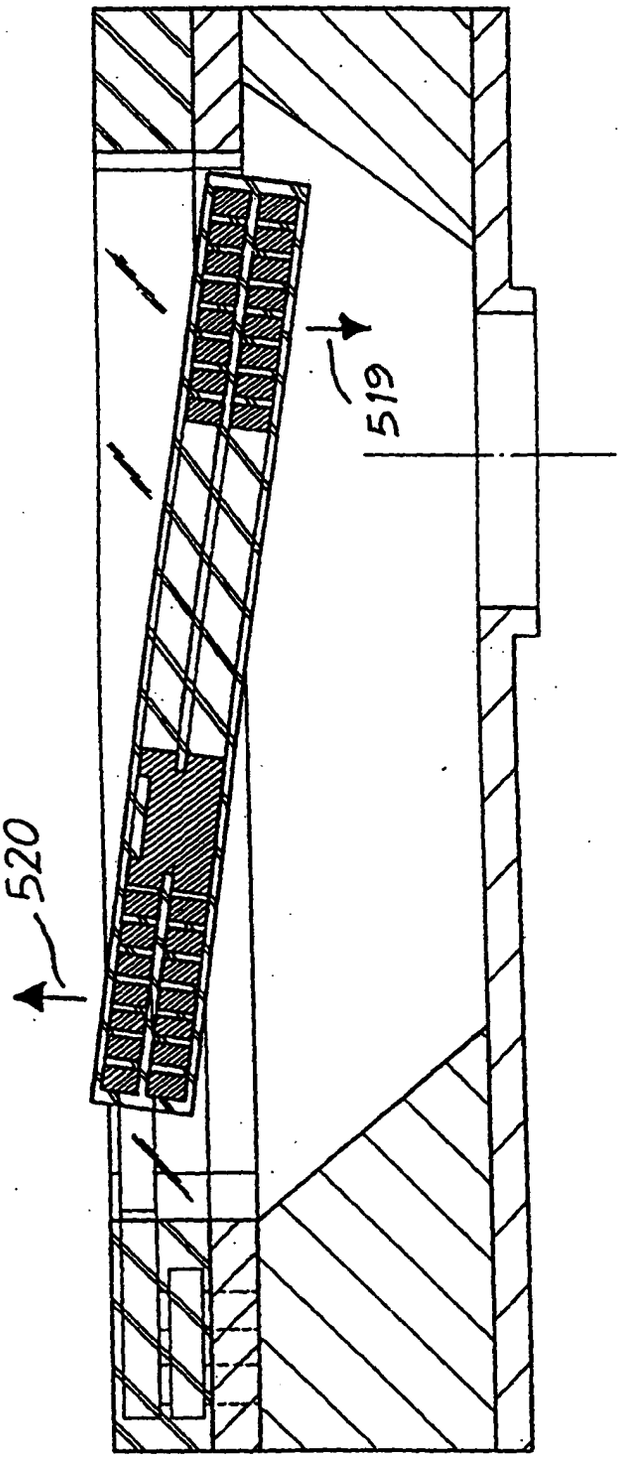

FIG. 80

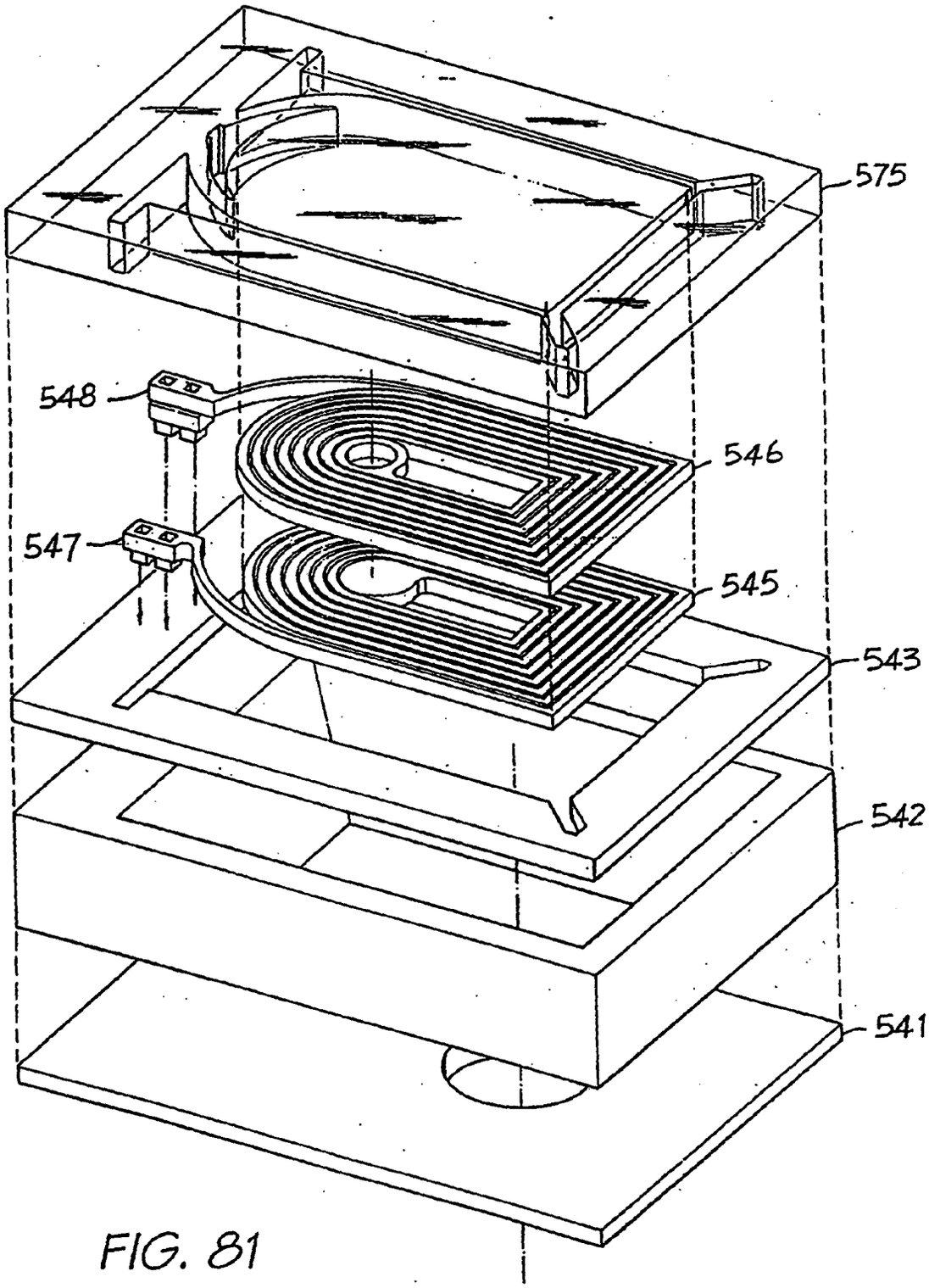

FIG. 81

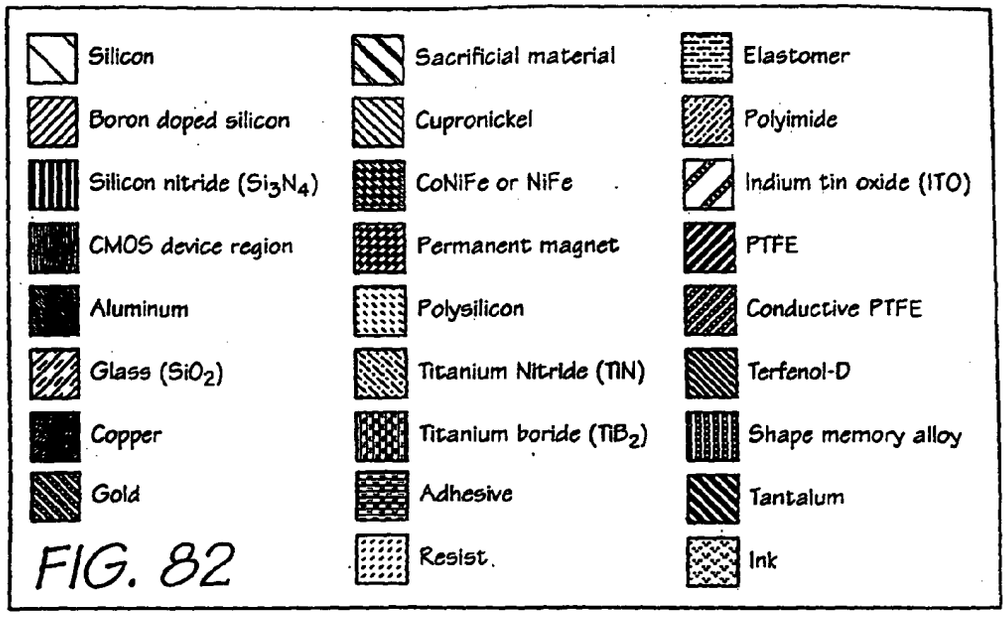

FIG. 82

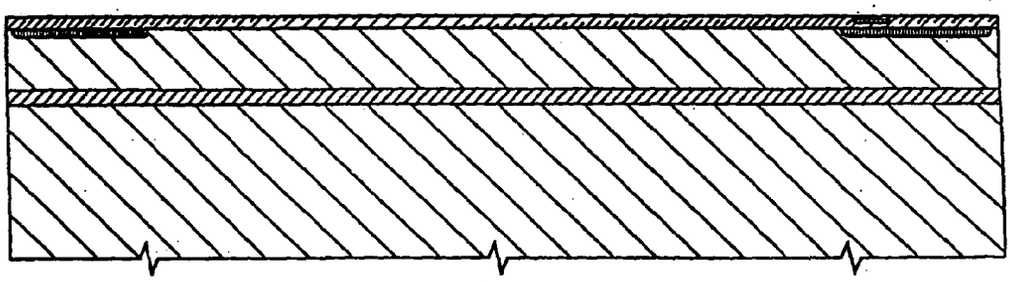

FIG. 83

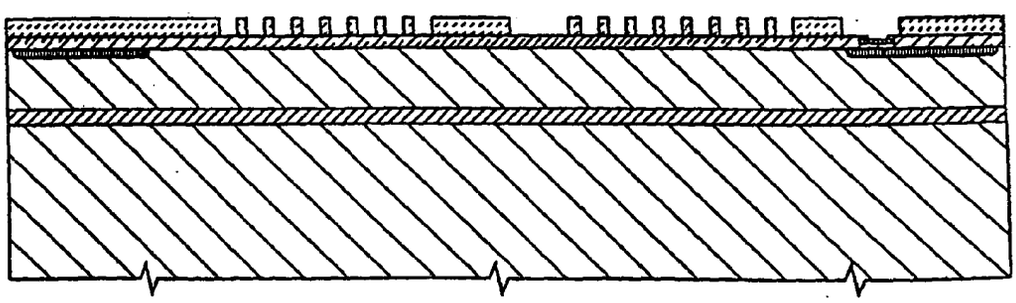

FIG. 84

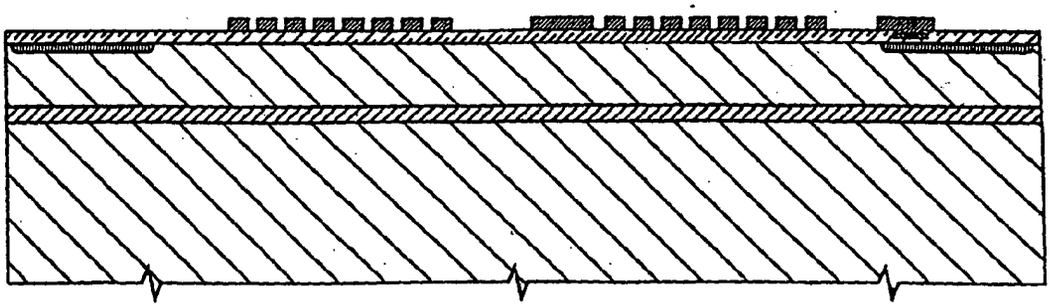

FIG. 85

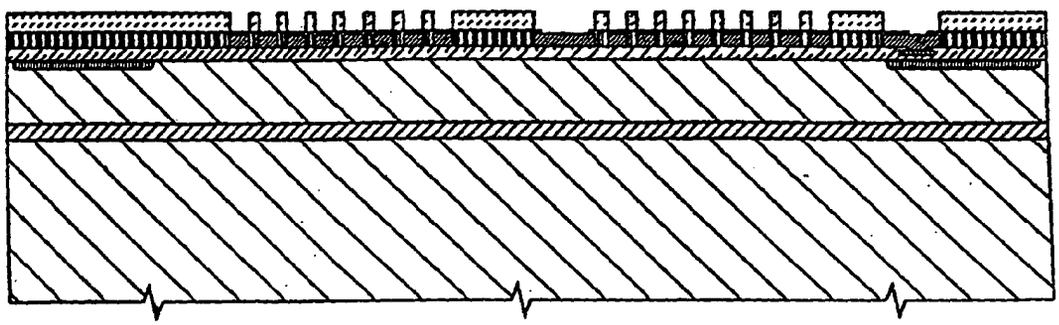

FIG. 86

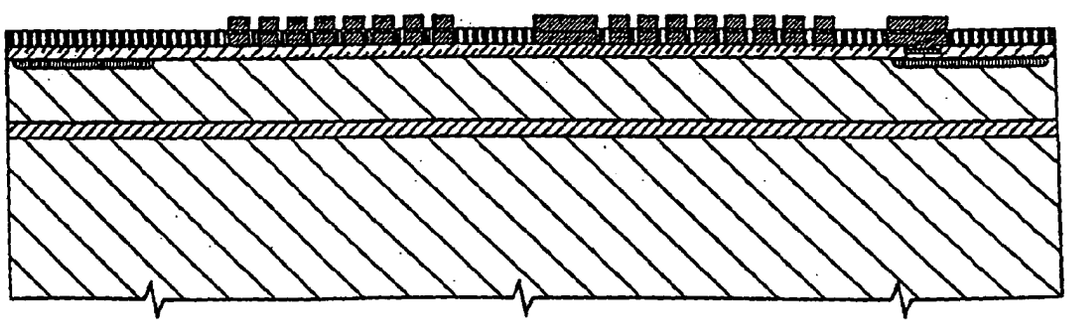

FIG. 87

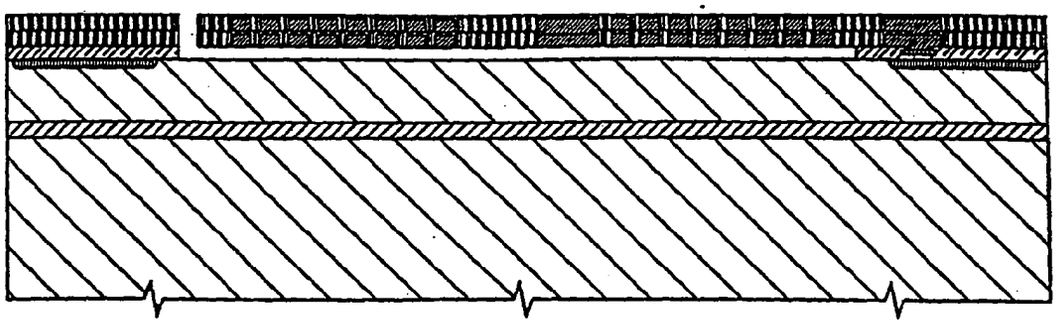

FIG. 88

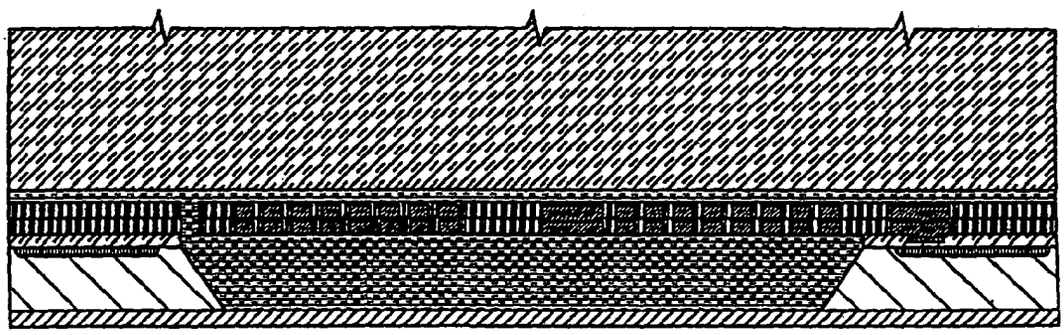

FIG. 89

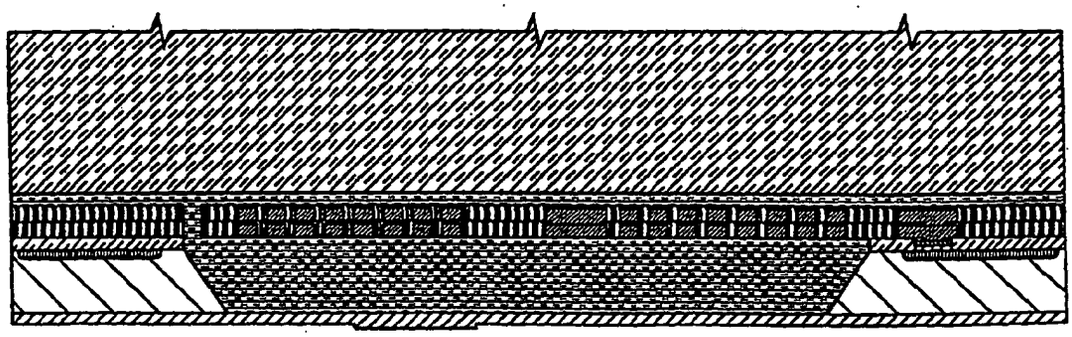

FIG. 90

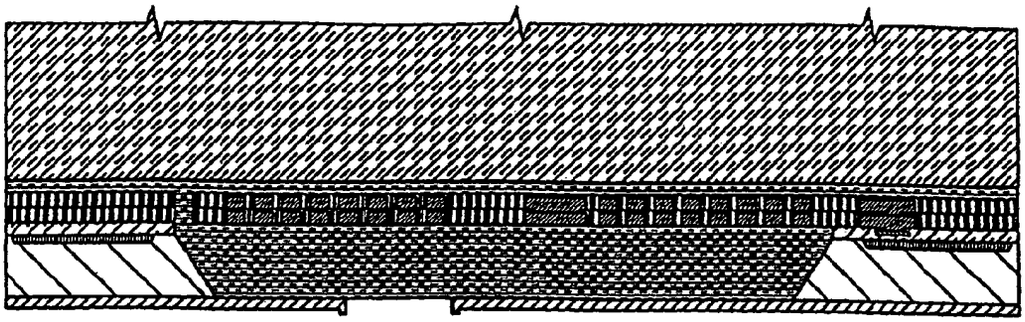

FIG. 91

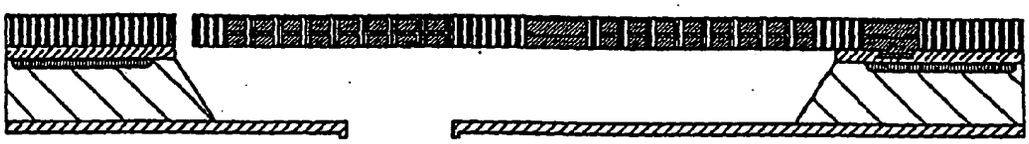

FIG. 92

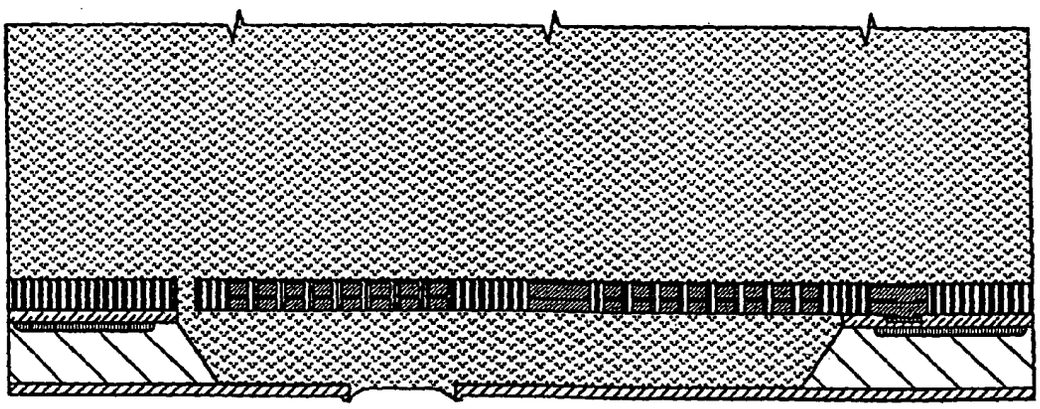

FIG. 93

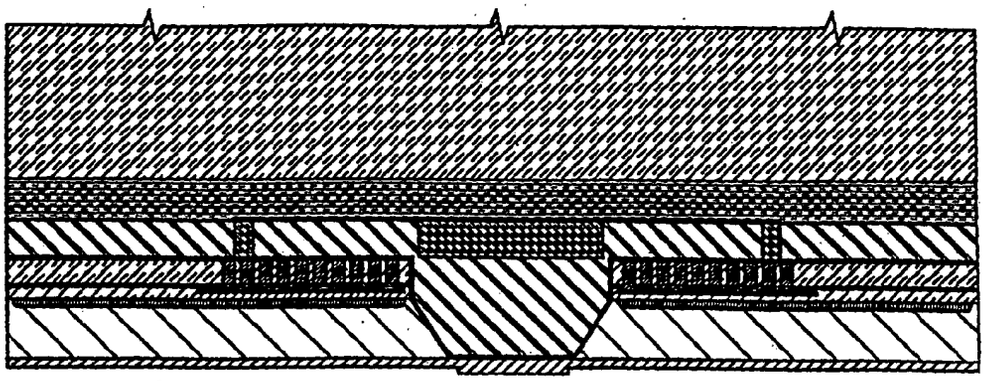

FIG. 108

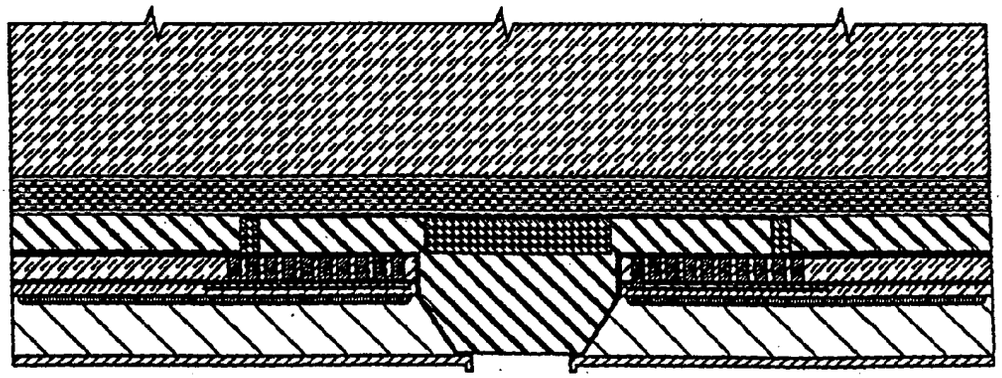

FIG. 109

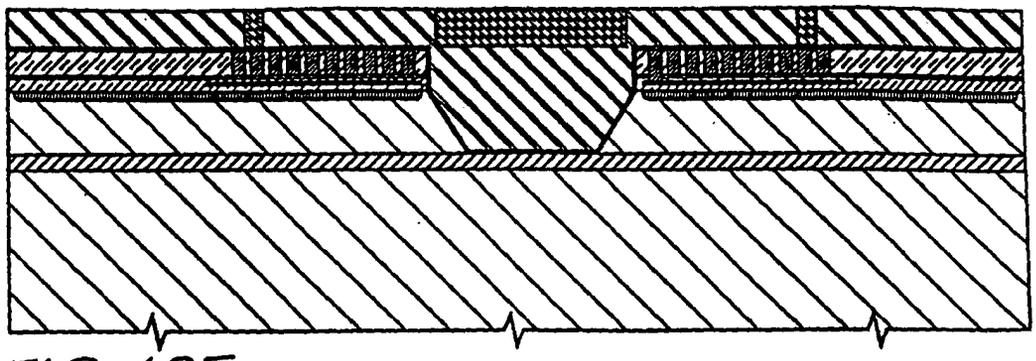

FIG. 105

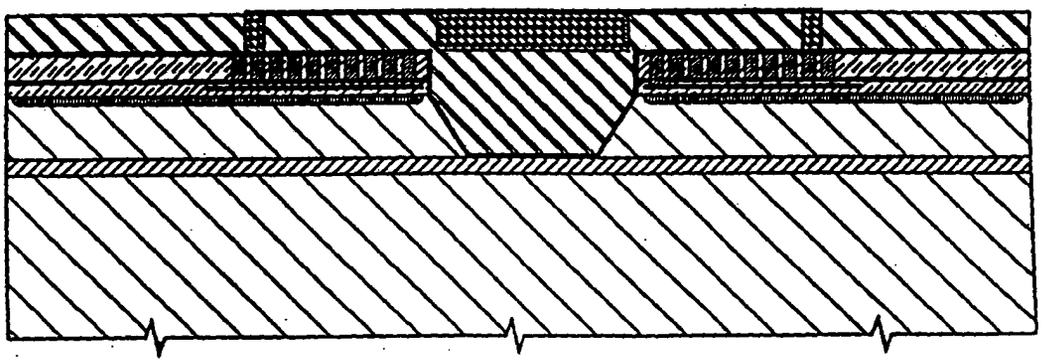

FIG. 106

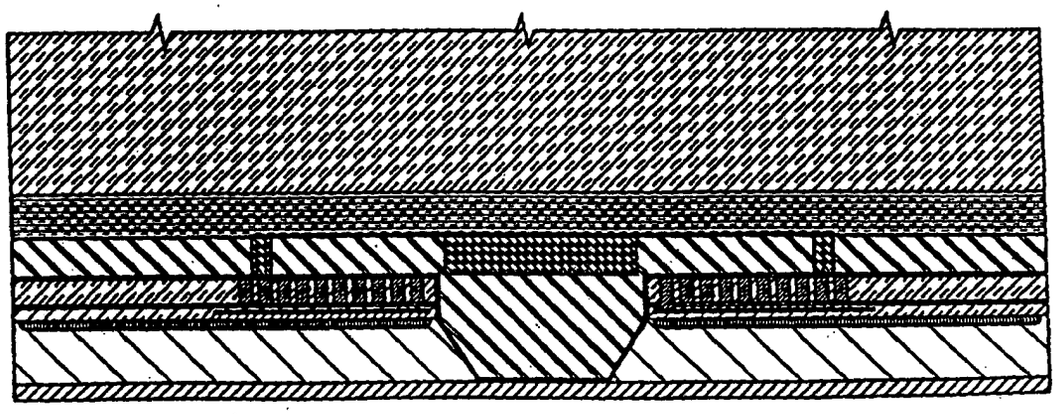

FIG. 107

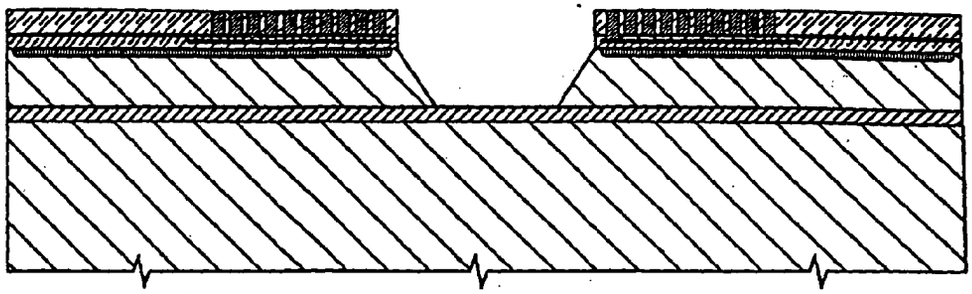

FIG. 102

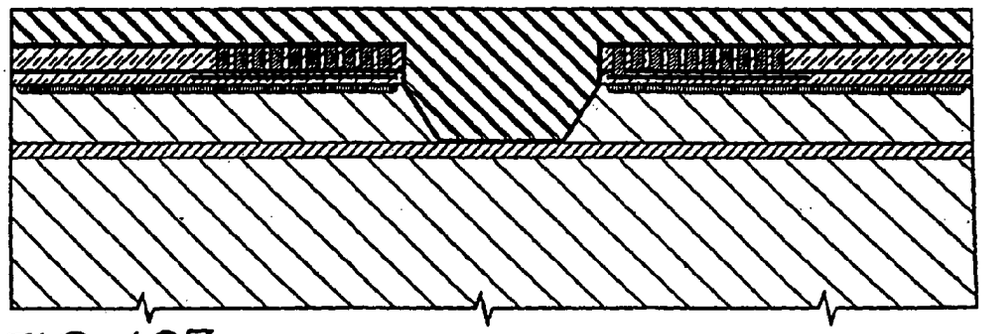

FIG. 103

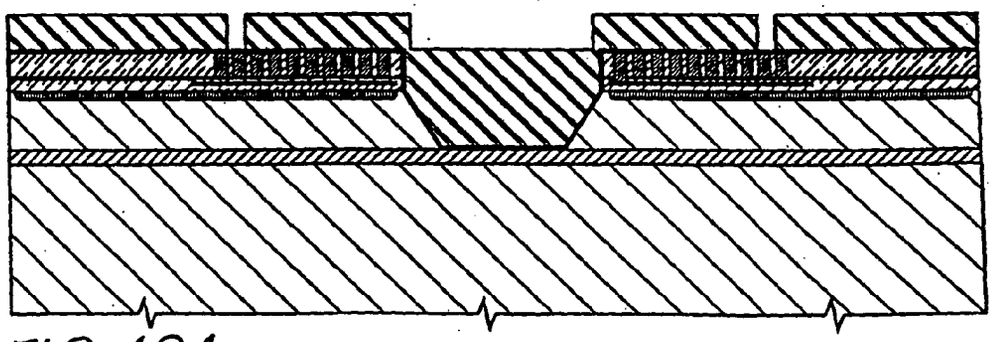

FIG. 104

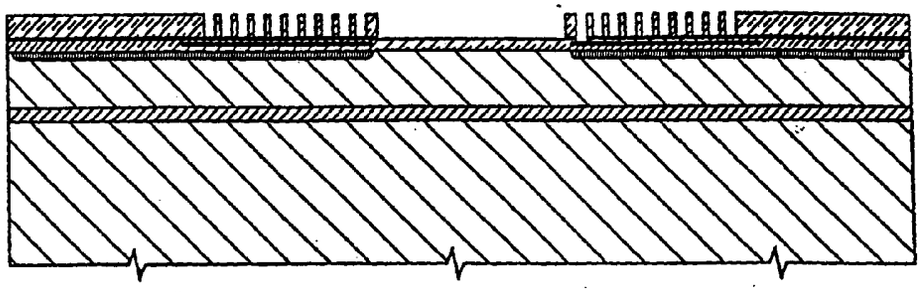

FIG. 99

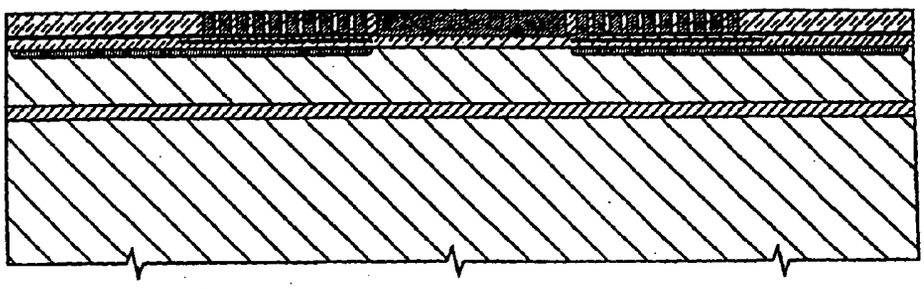

FIG. 100

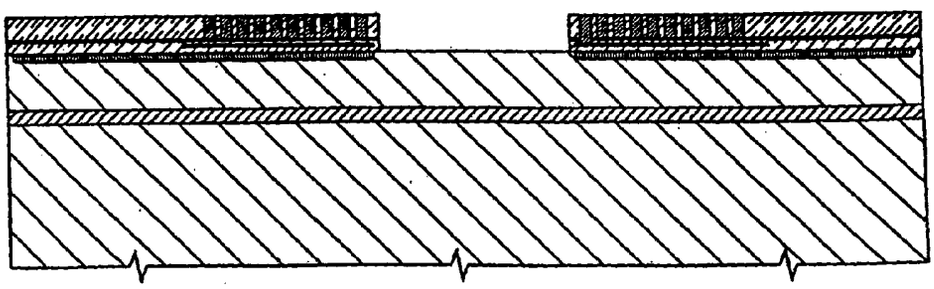

FIG. 101

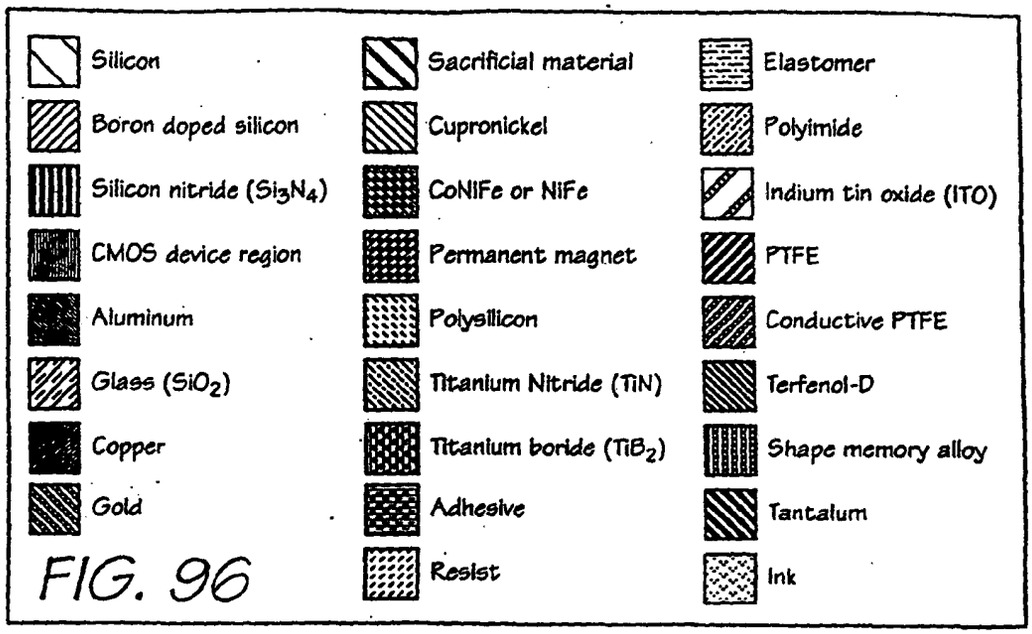

FIG. 96

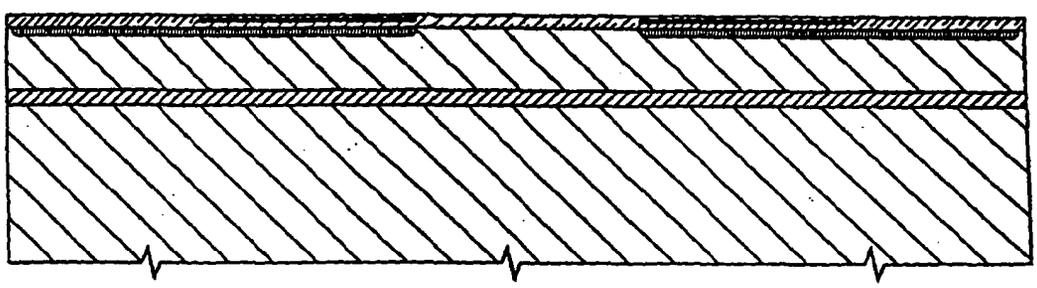

FIG. 97

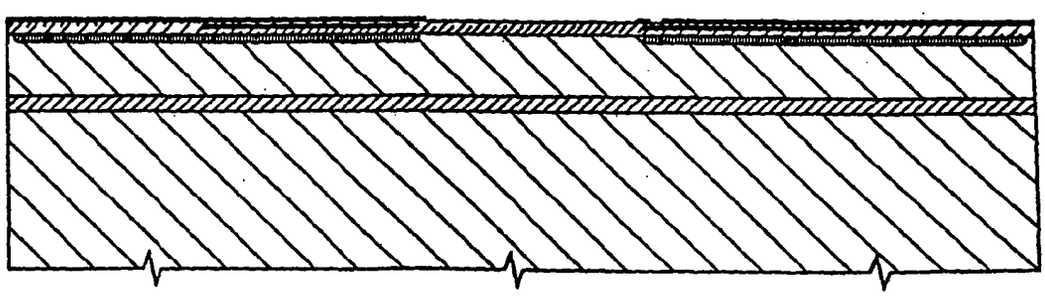

FIG. 98

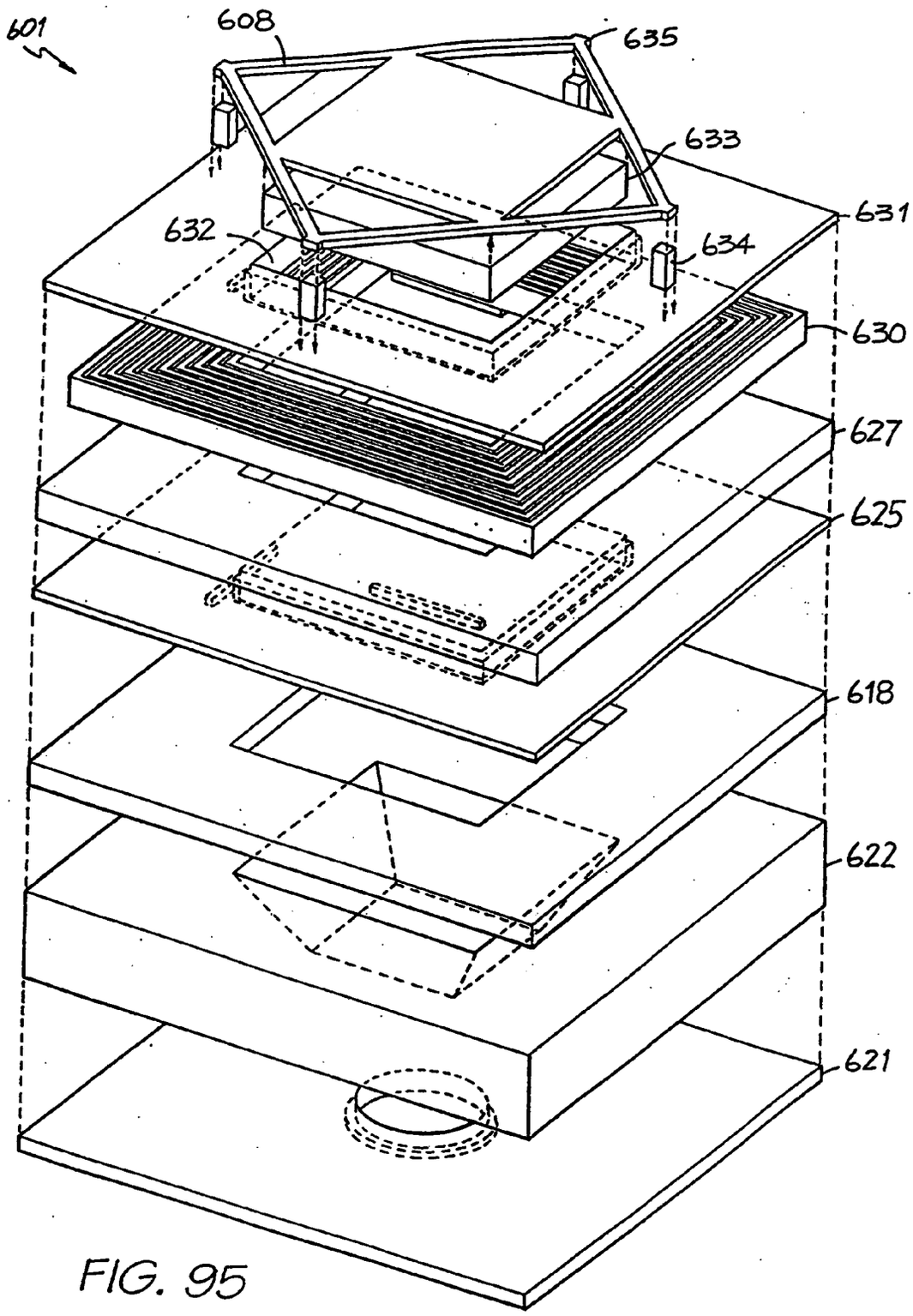

FIG. 95

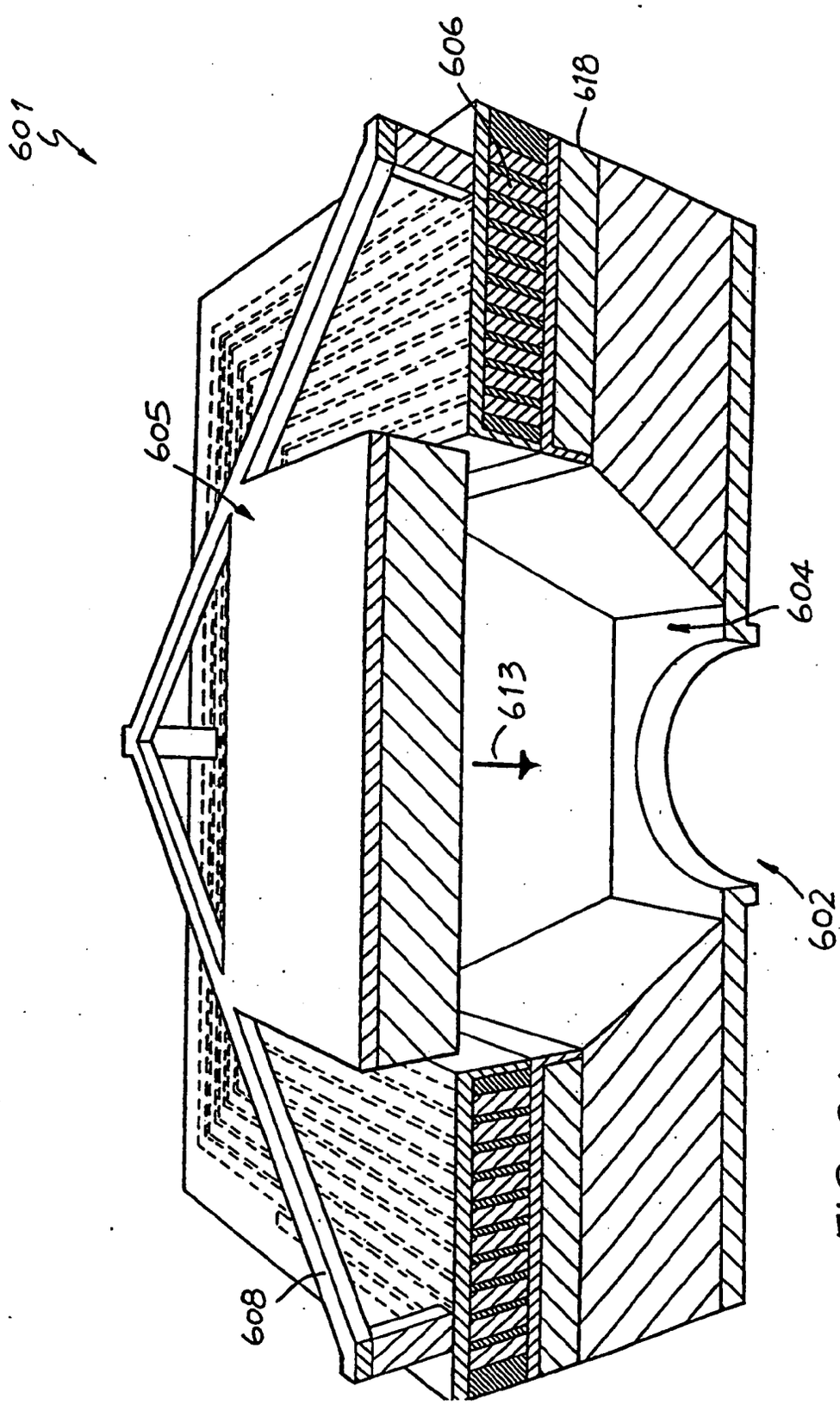

FIG. 94

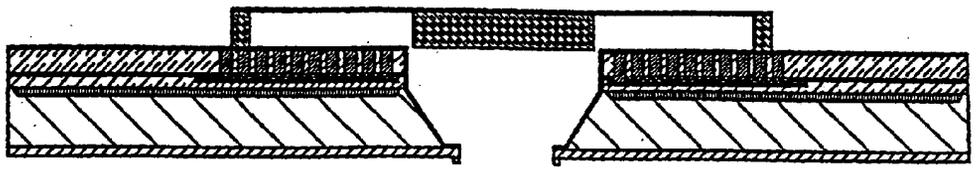

FIG. 110

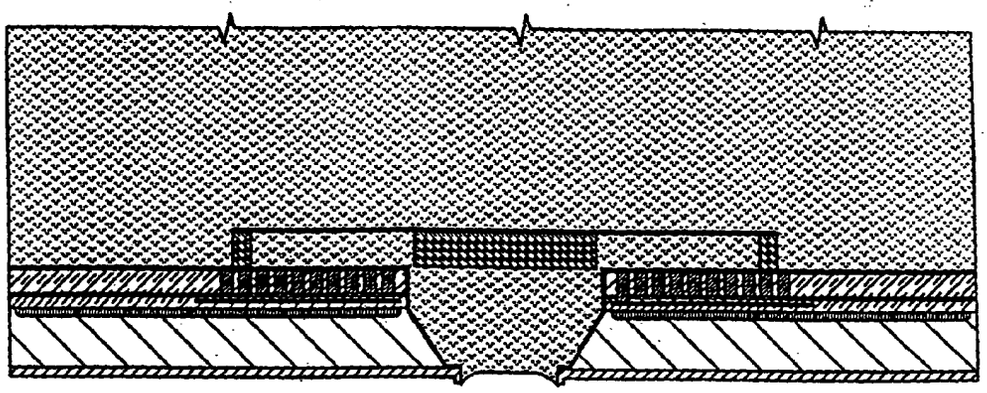

FIG. 111

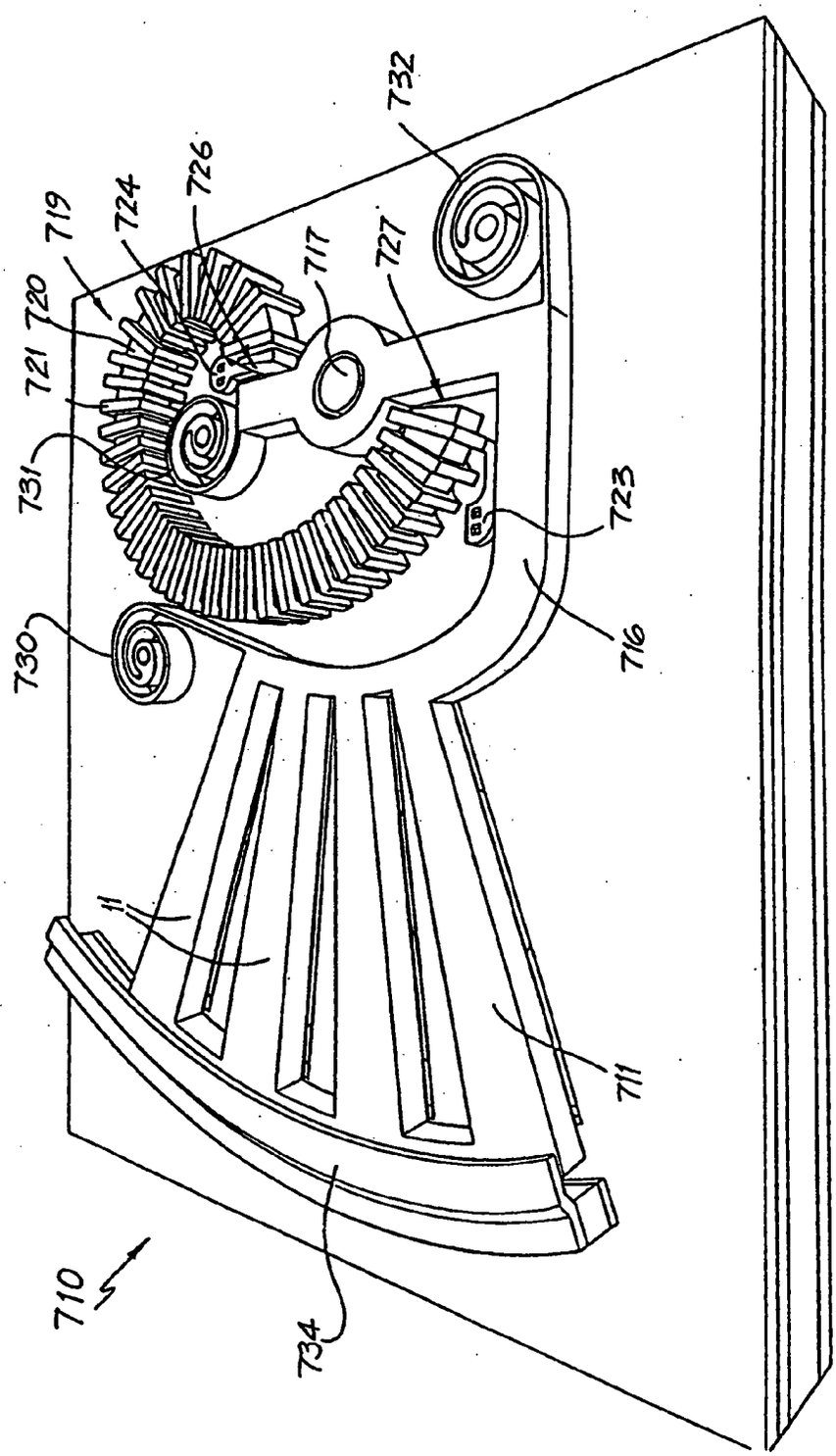

FIG. 112

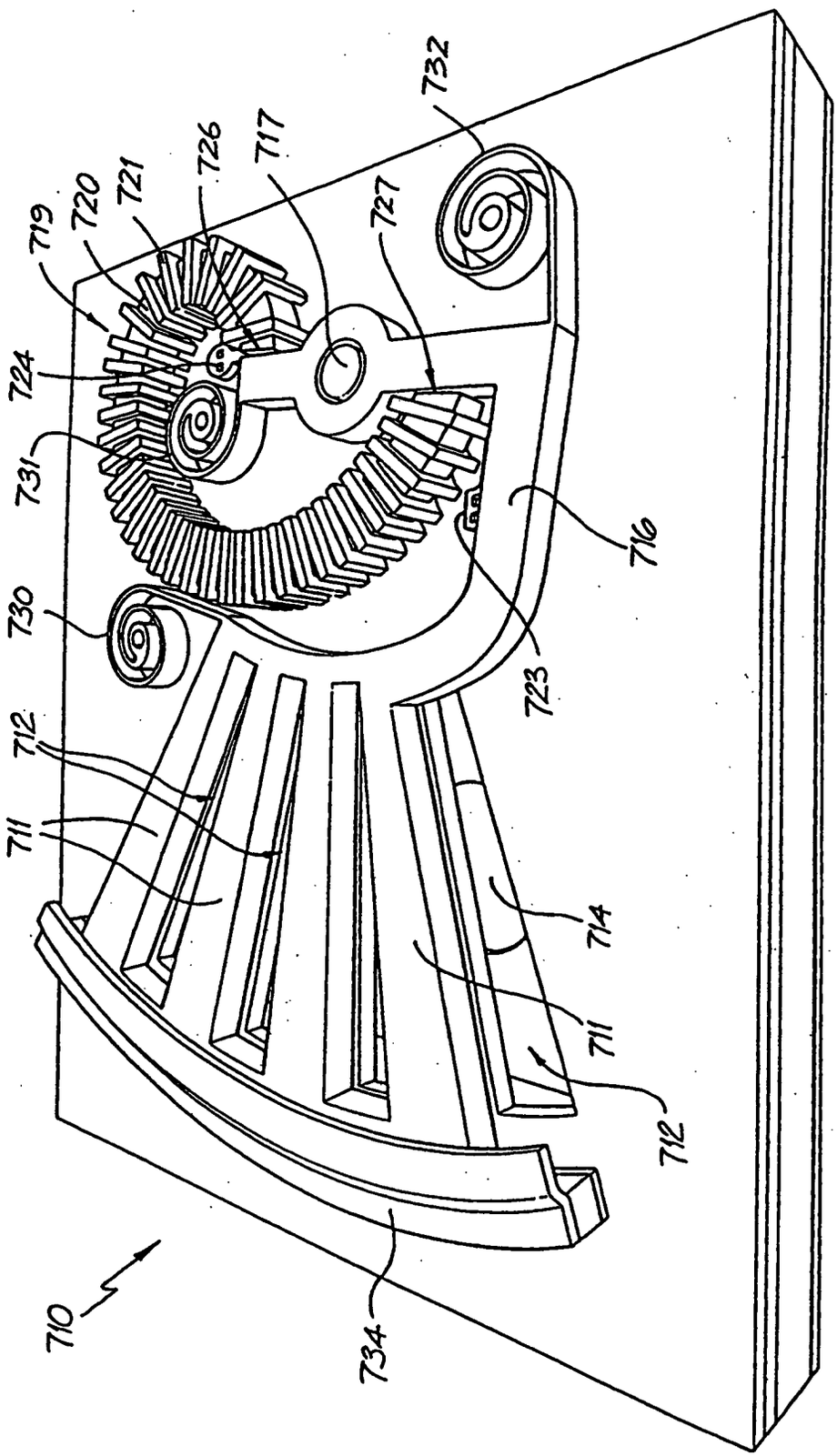
710
711
712
714
716
717
719
720
721
723
724
726
727
730
731
732
734

FIG. 113

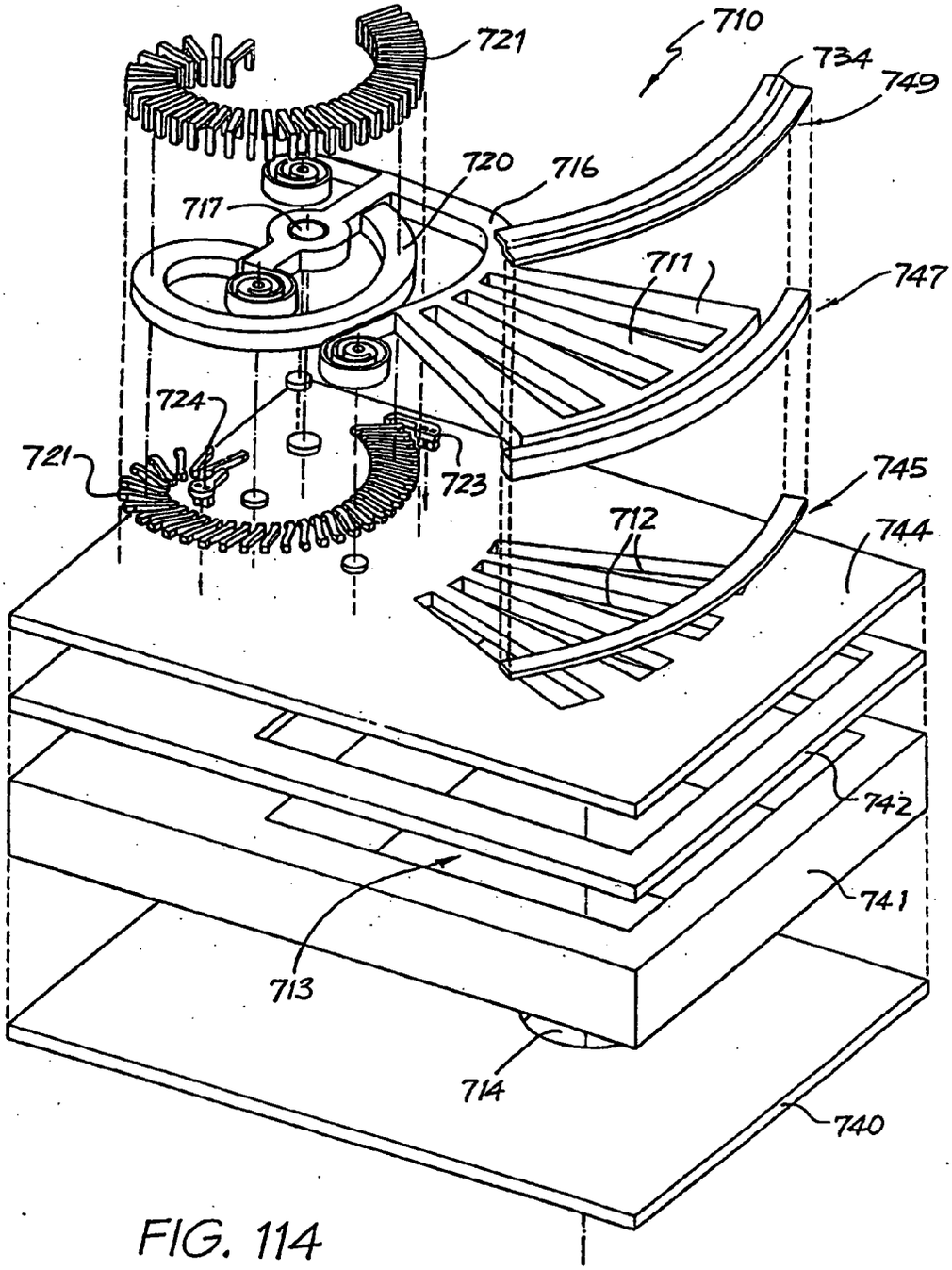
710
721
734
749
720
716
717
711
747
724
721
723
745
712
744
742
741
713
714
740

FIG. 114

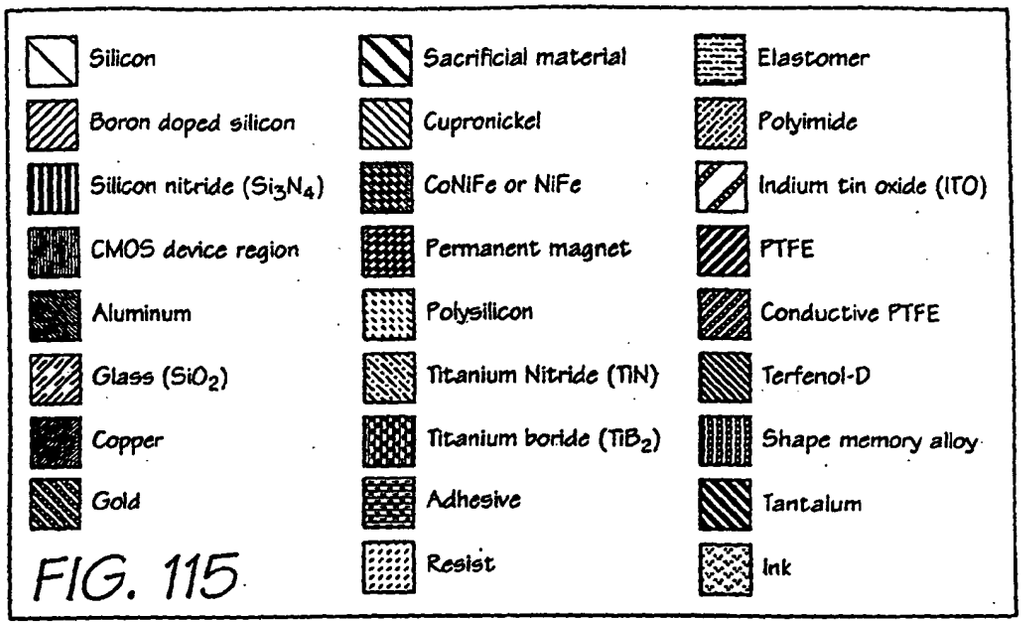

FIG. 115

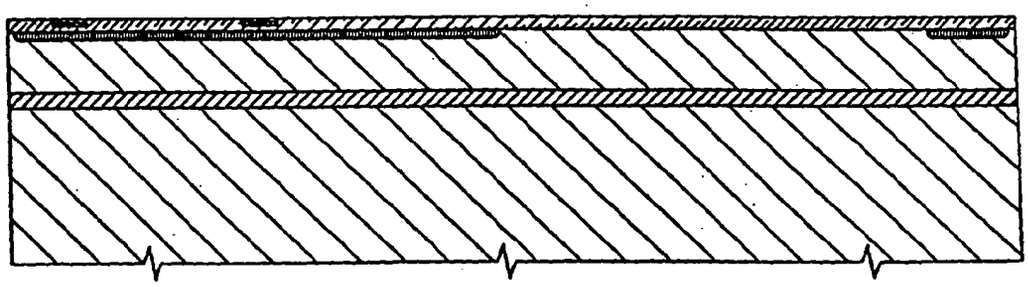

FIG. 116

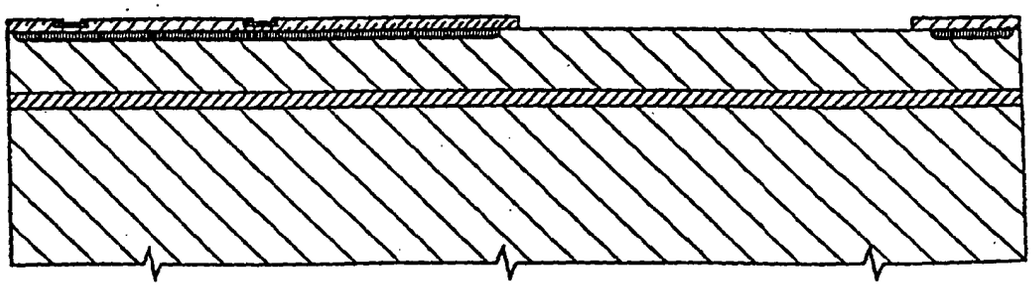

FIG. 117

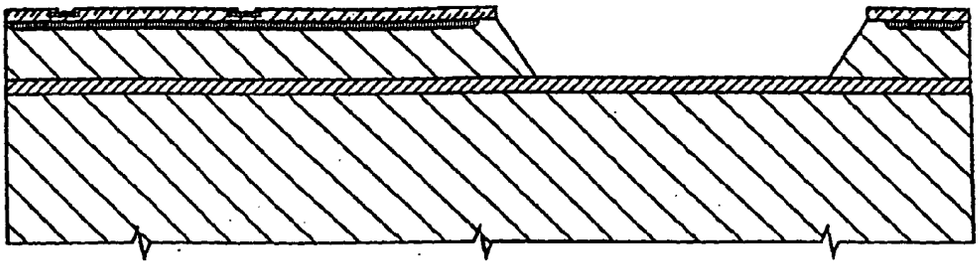

FIG. 118

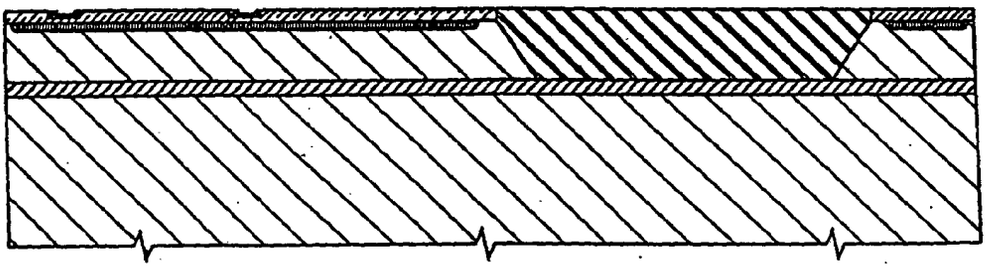

FIG. 119

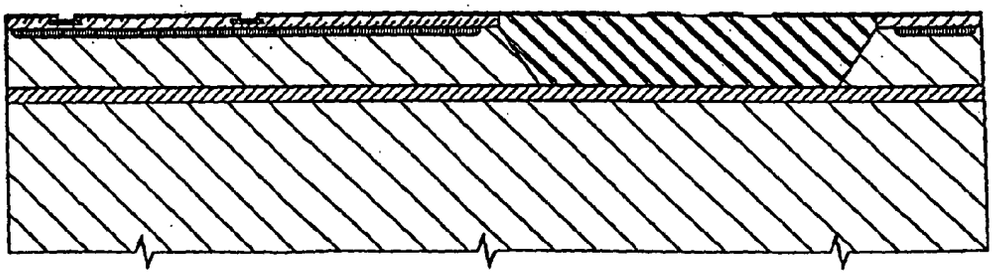

FIG. 120

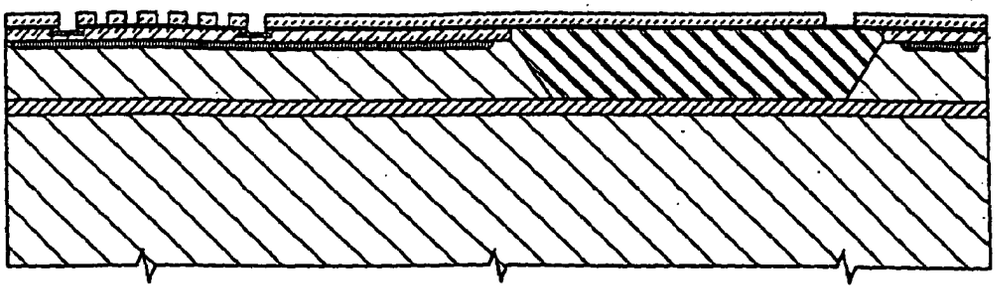

FIG. 121

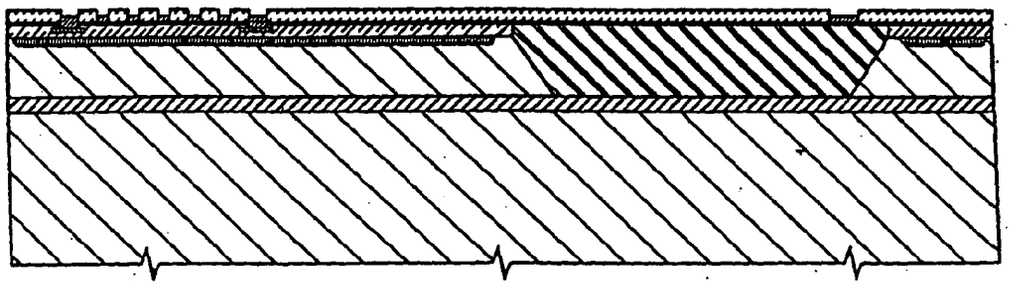

FIG. 122

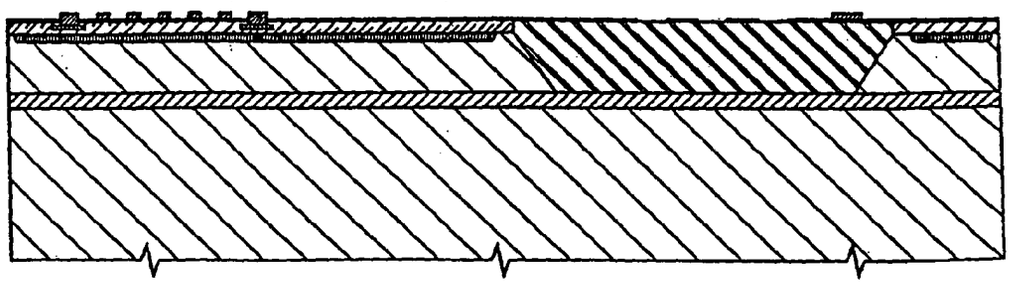

FIG. 123

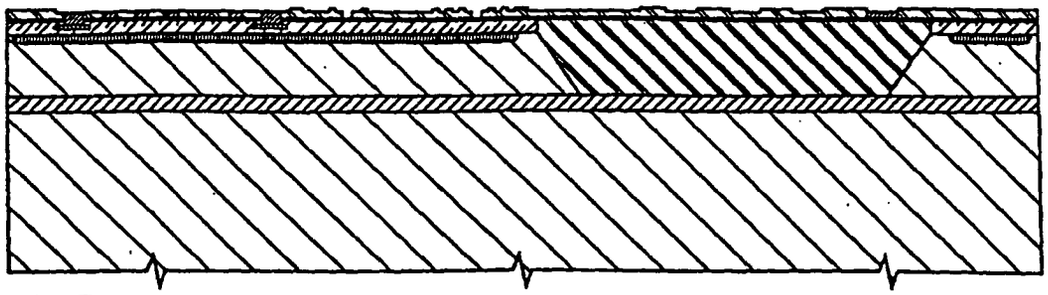

FIG. 124

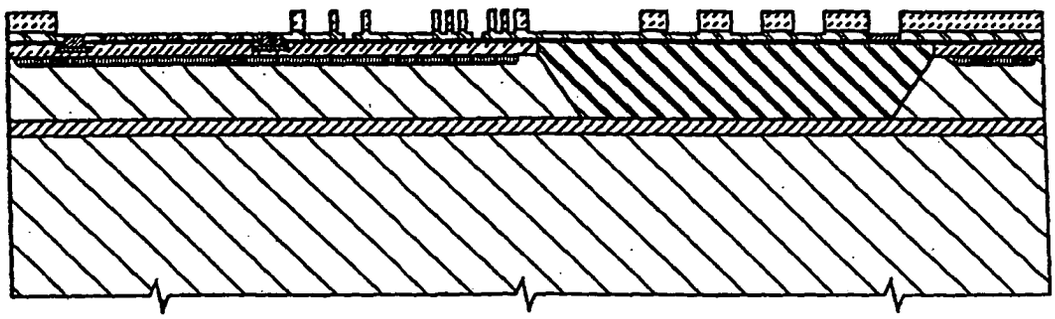

FIG. 125

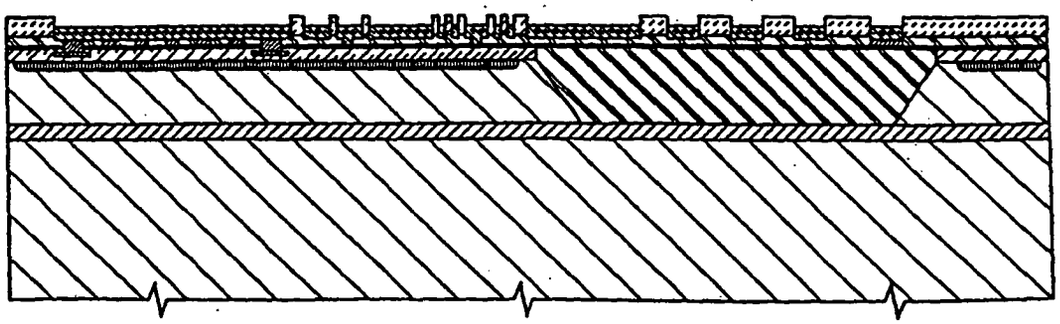

FIG. 126

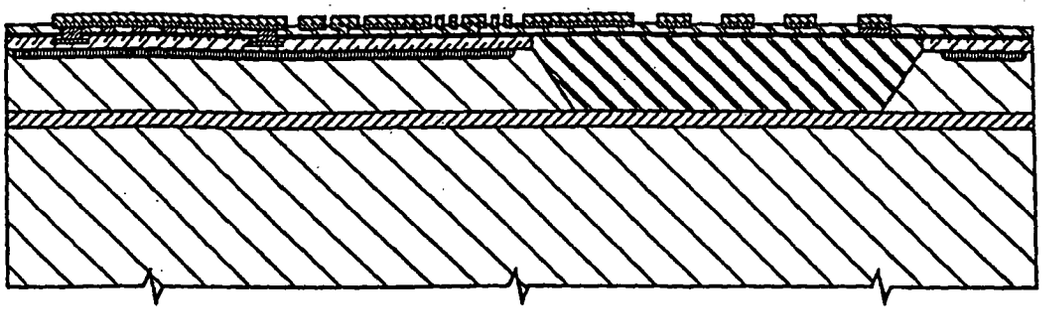

FIG. 127

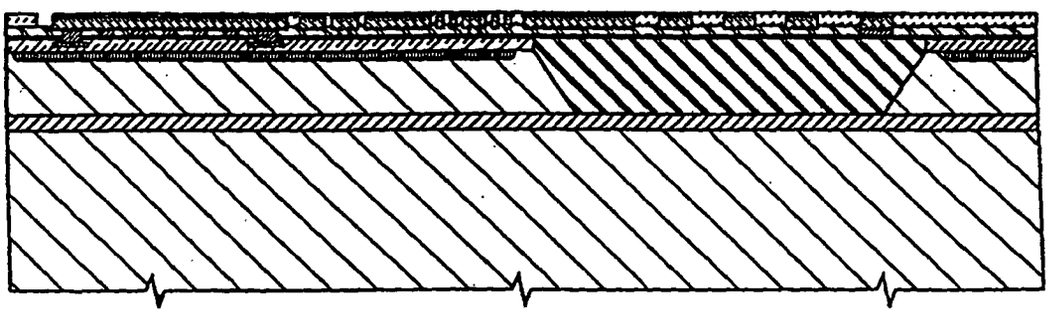

FIG. 128

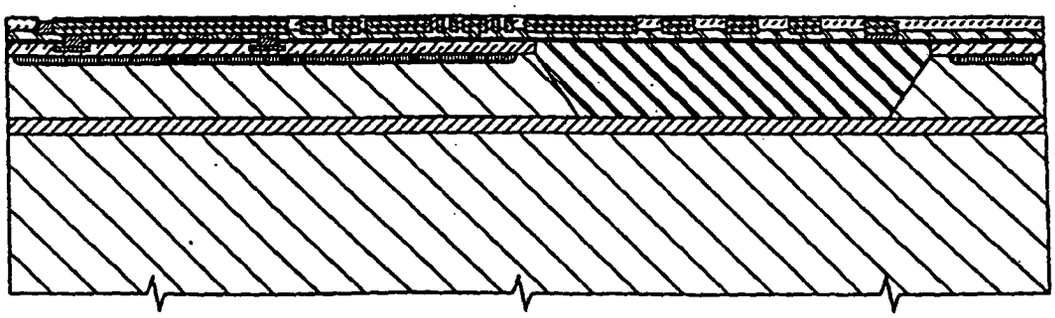

FIG. 129

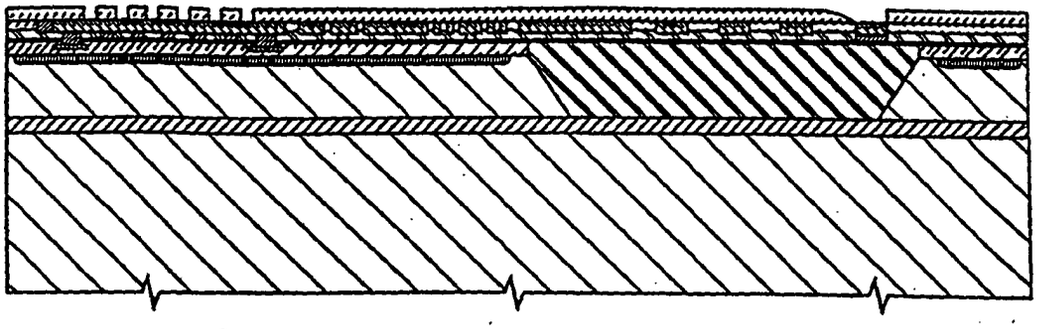

FIG. 130

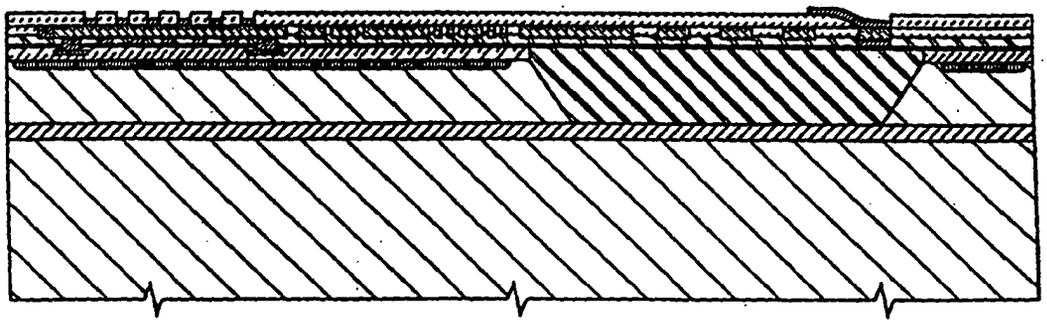

FIG. 131

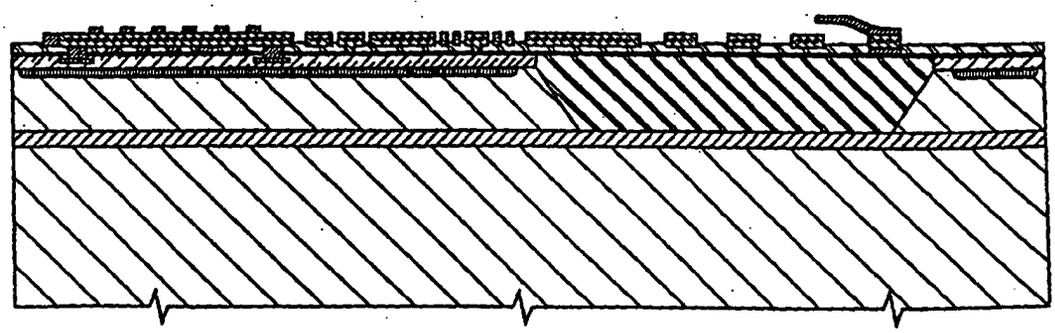

FIG. 132

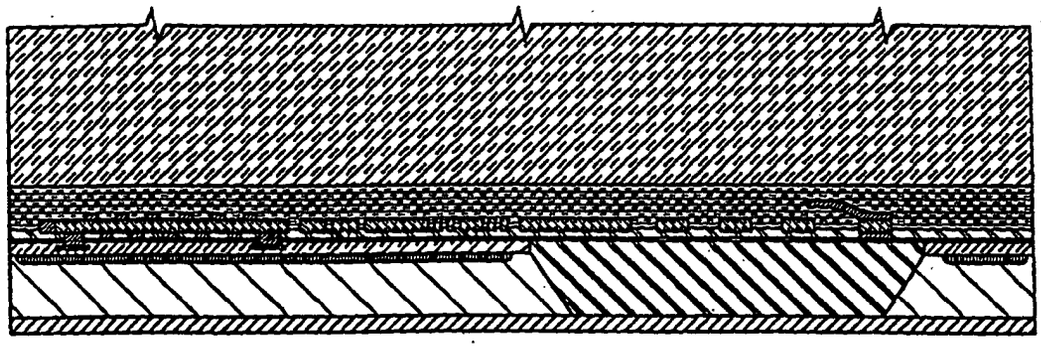

FIG. 133

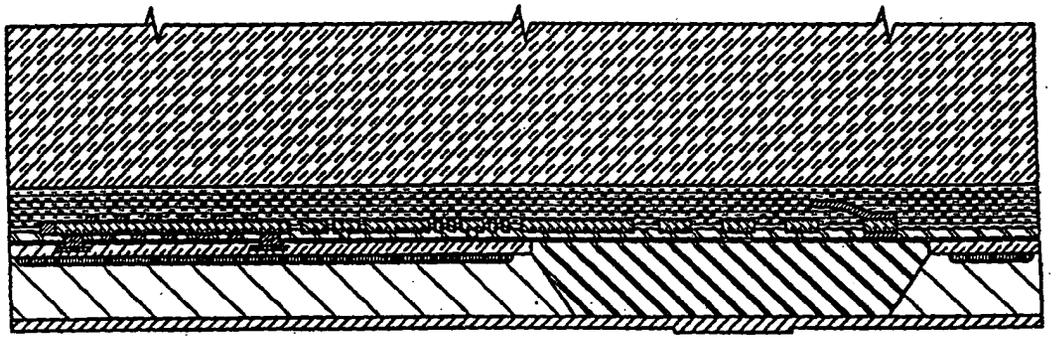

FIG. 134

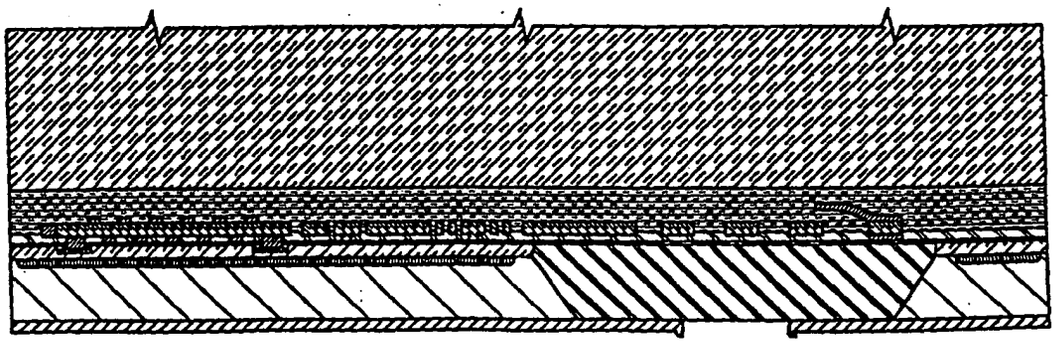

FIG. 135

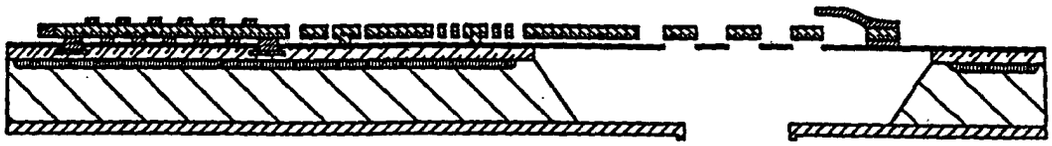

FIG. 136

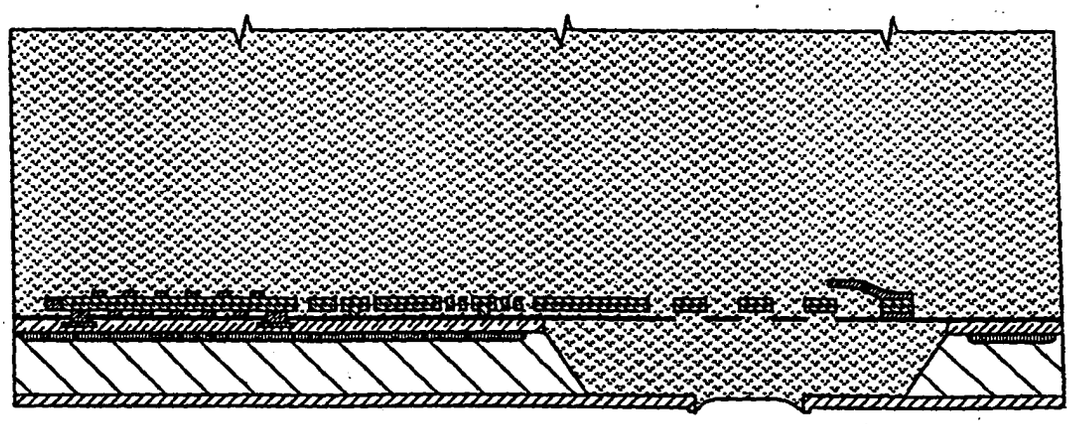

FIG. 137

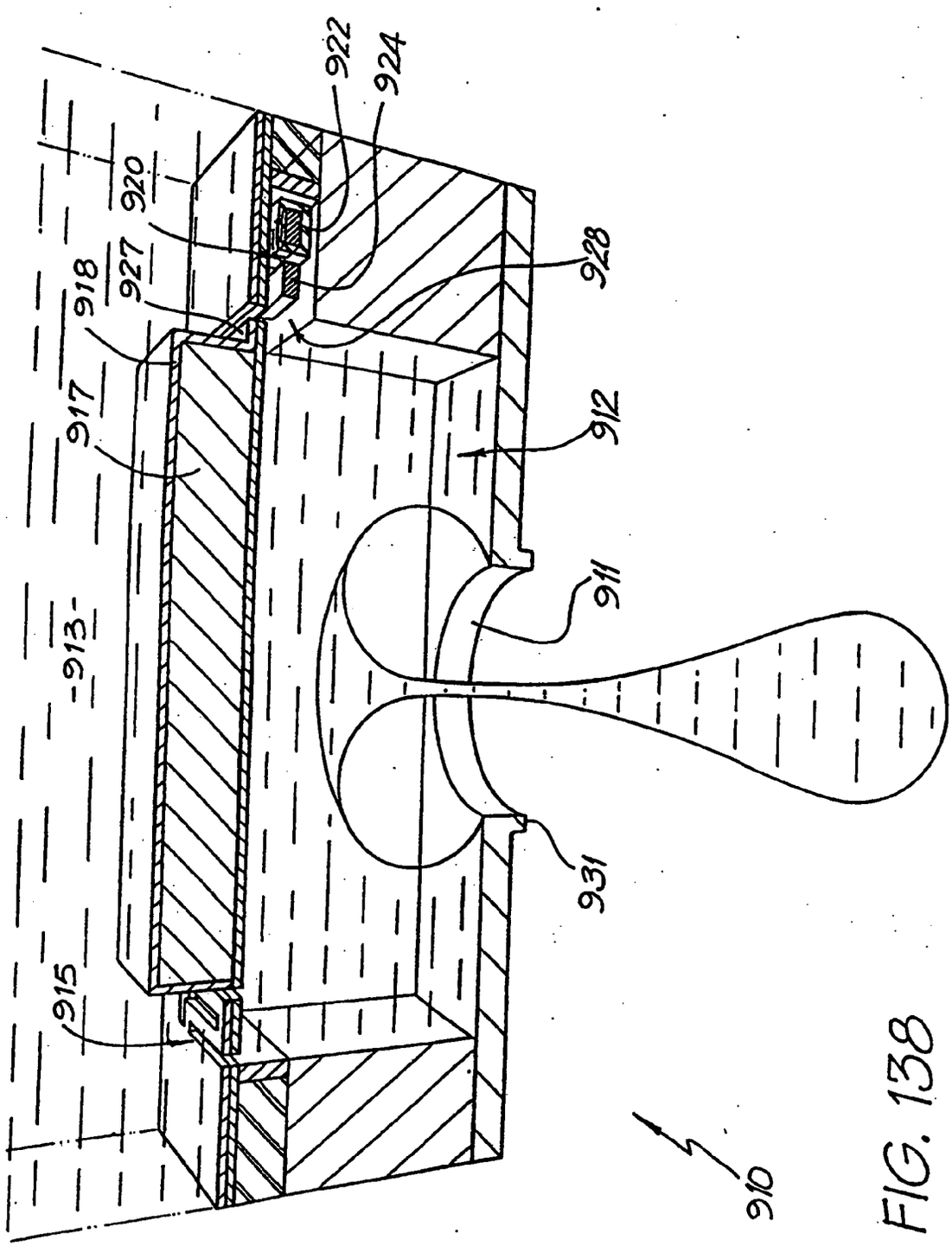

FIG. 138

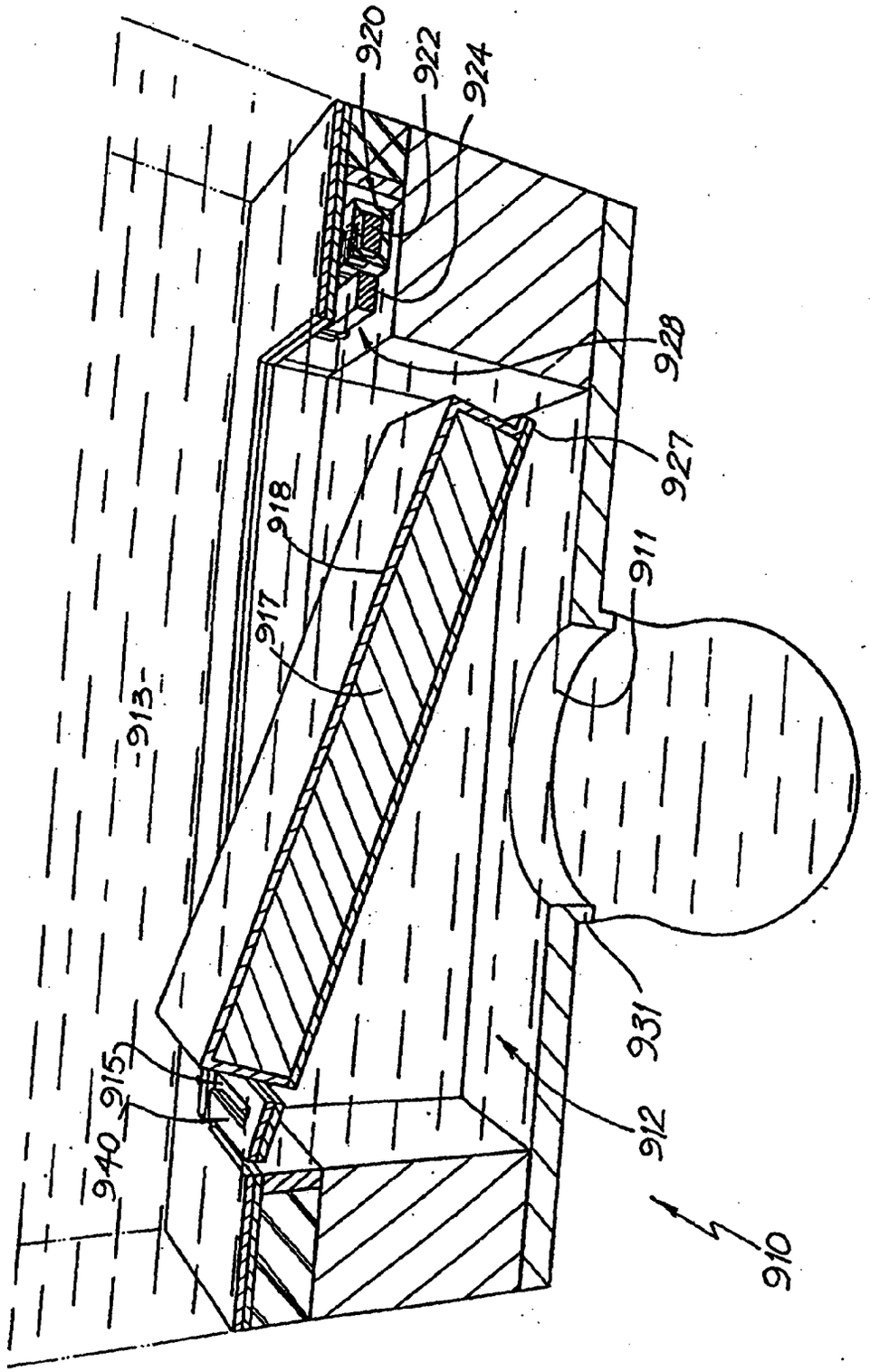

FIG. 139

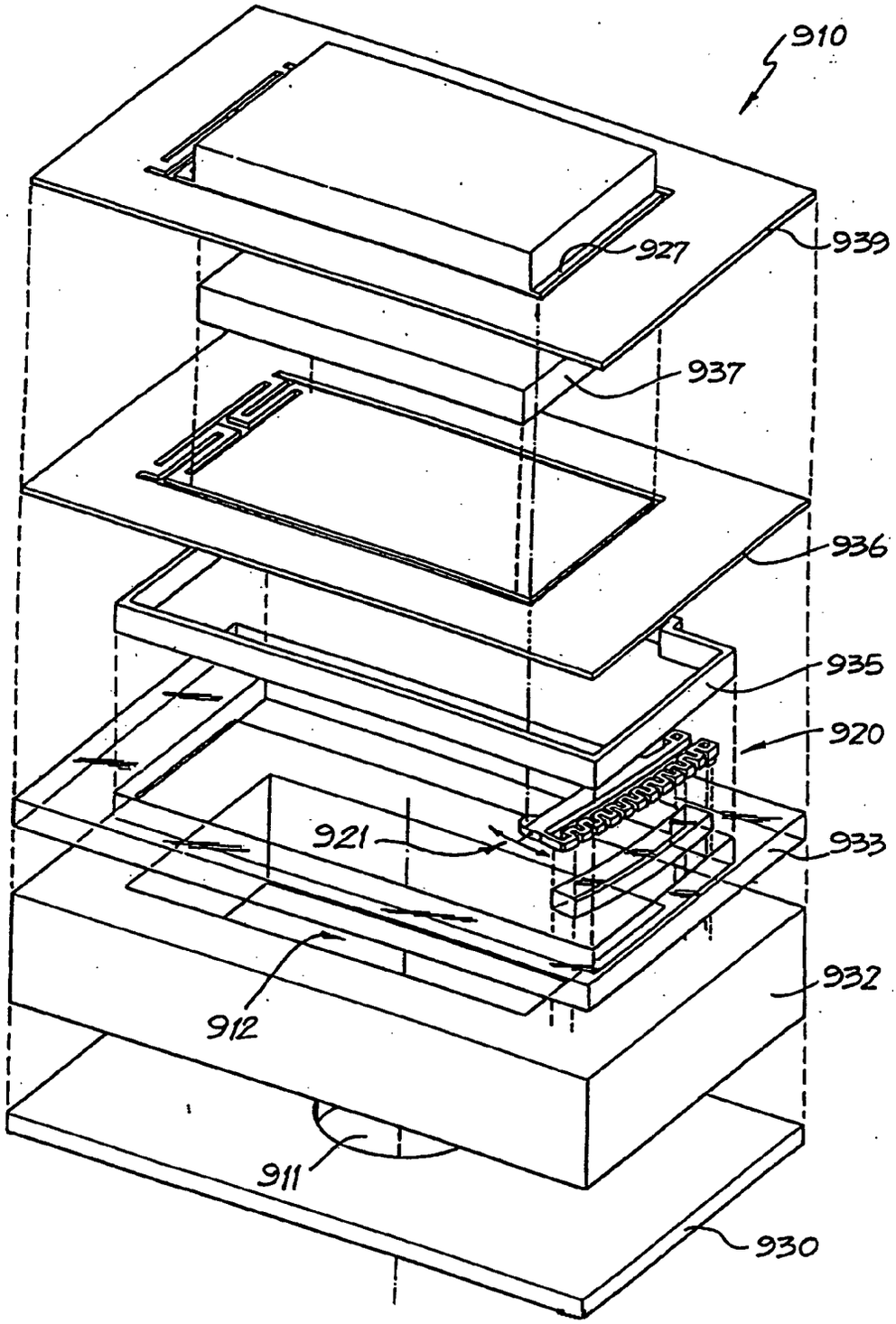

FIG.140

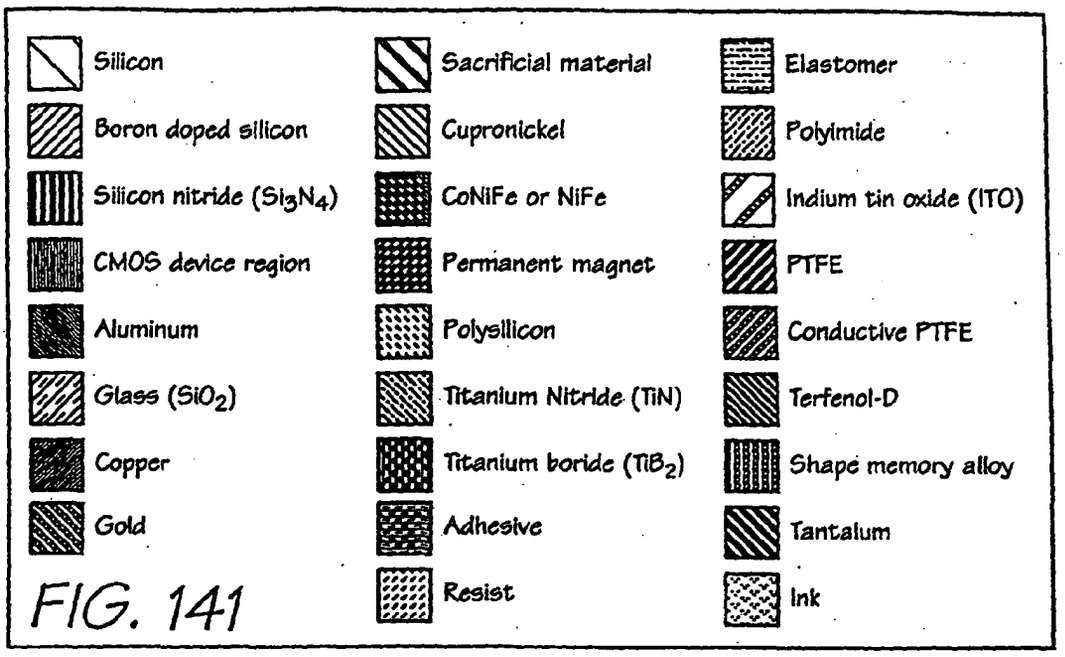

FIG. 141

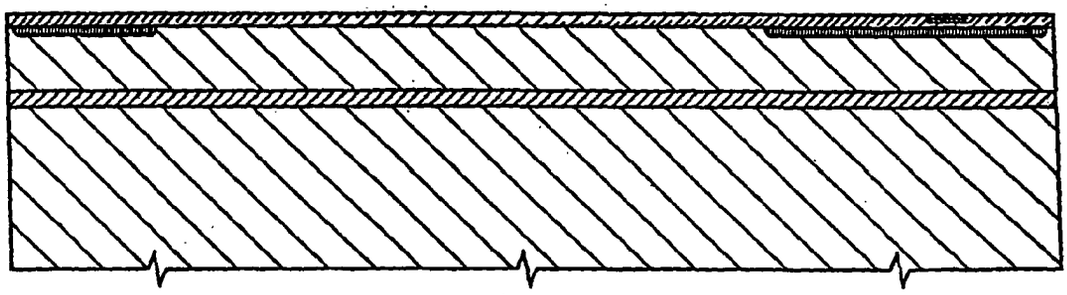

FIG. 142

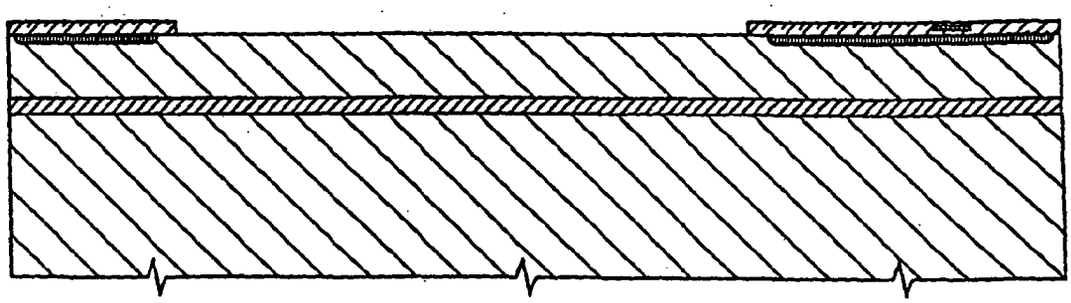

FIG. 143

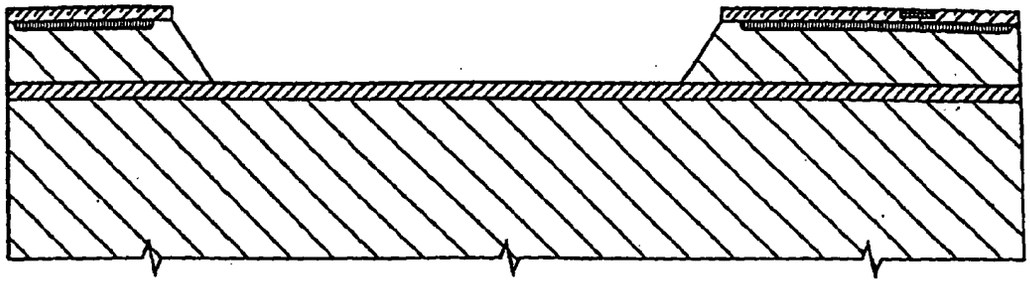

FIG. 144

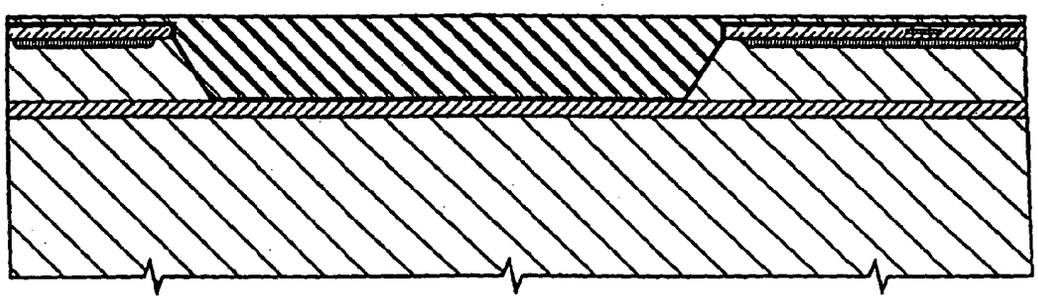

FIG. 145

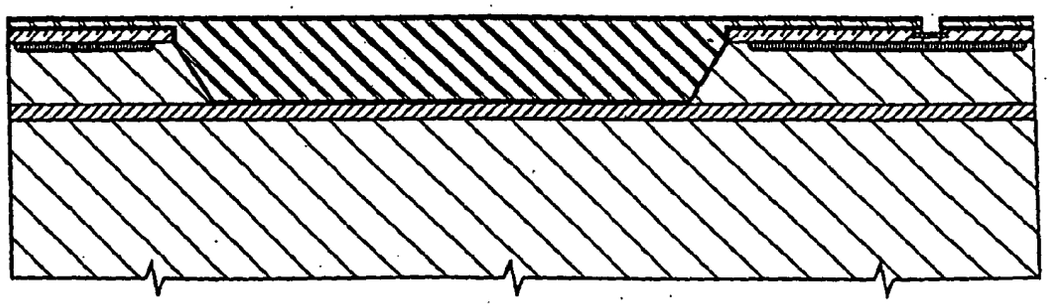

FIG. 146

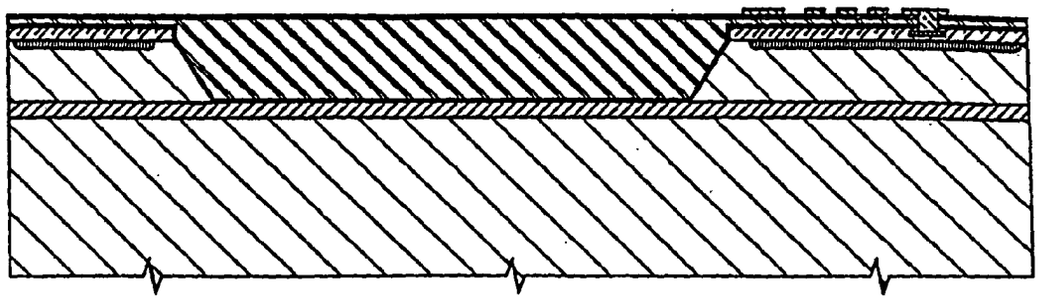

FIG. 147

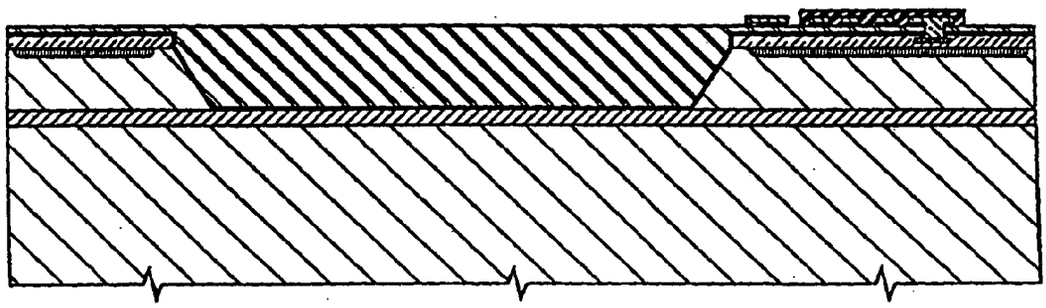

FIG. 148

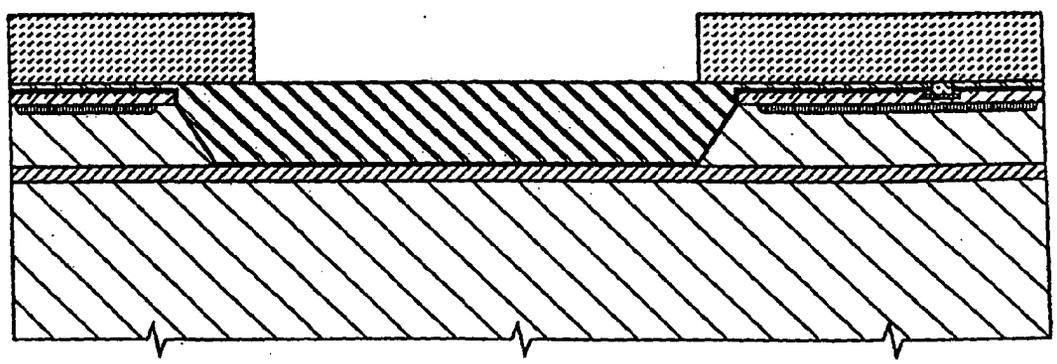

FIG. 149

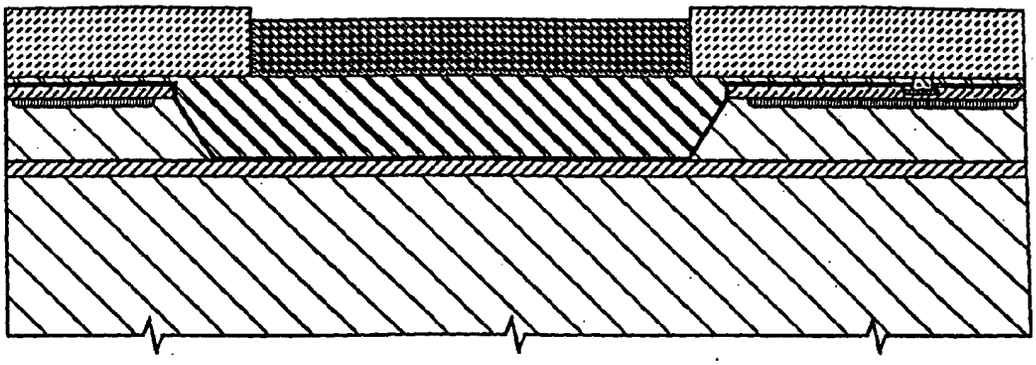

FIG. 150

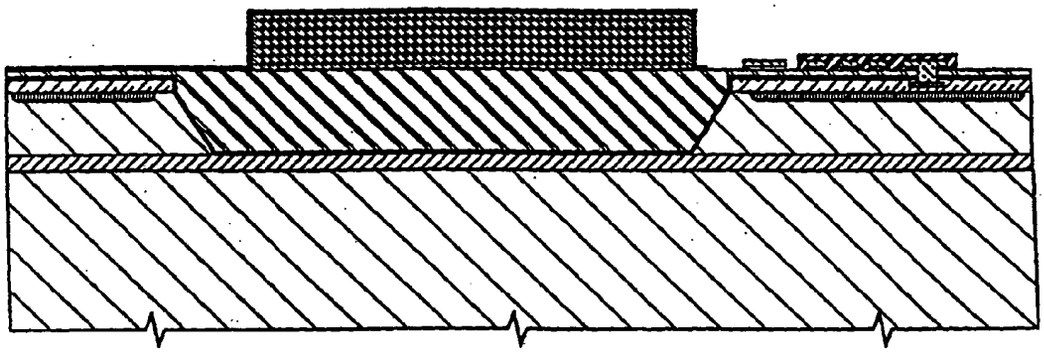

FIG. 151

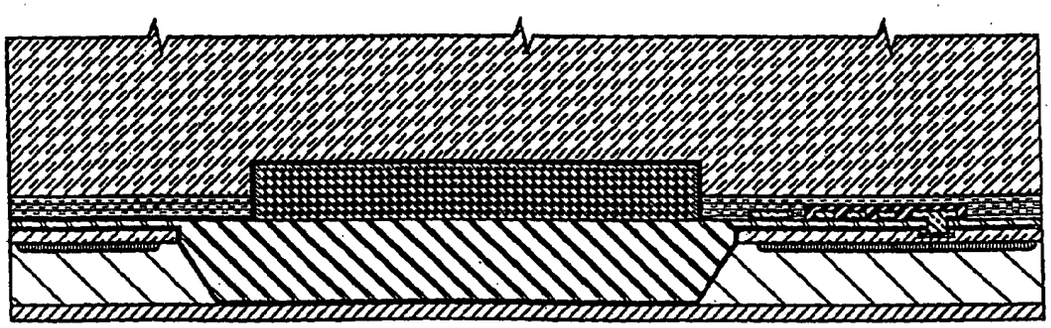

FIG. 152

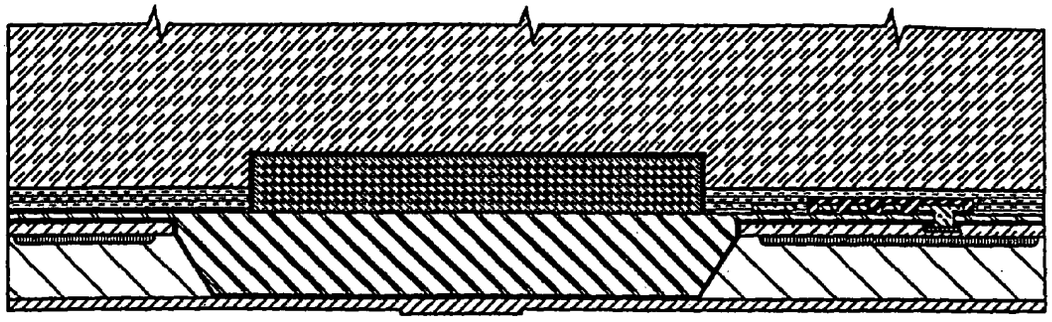

FIG. 153

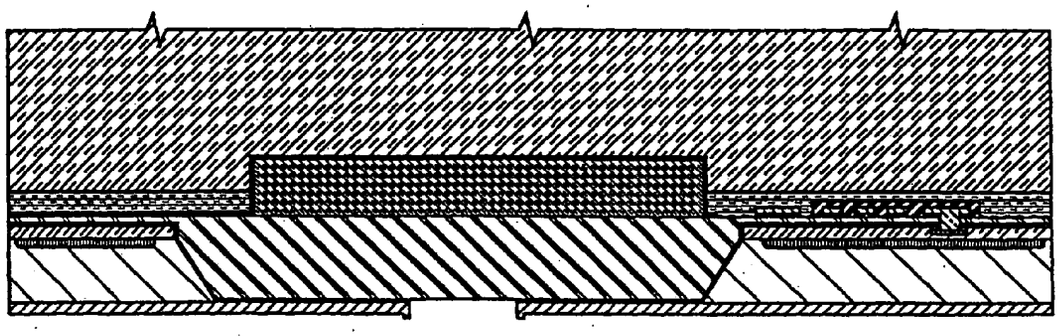

FIG. 154

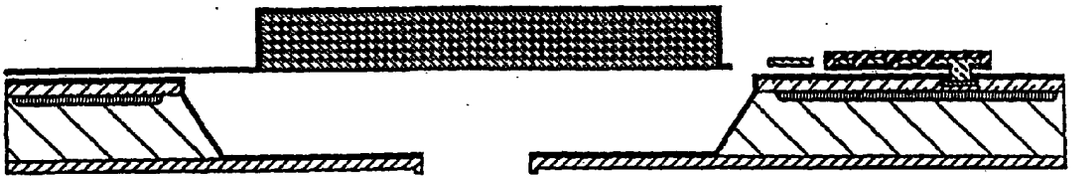

FIG. 155

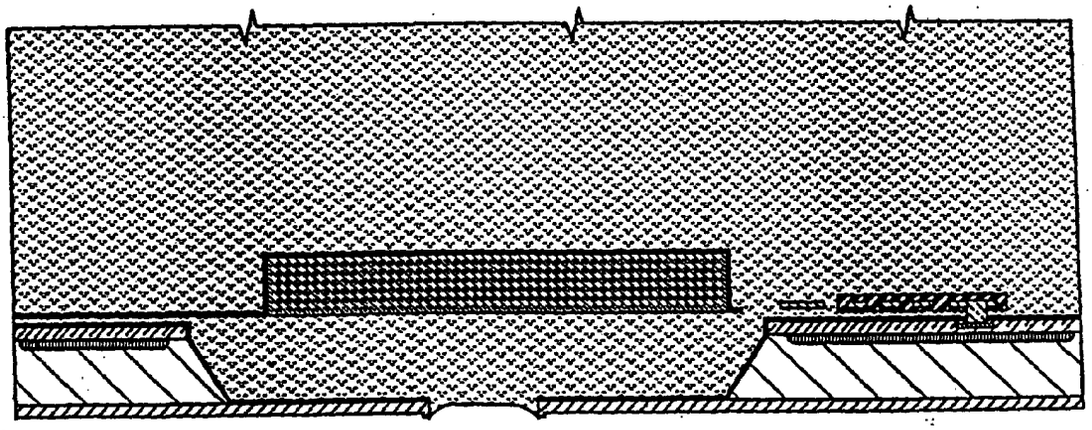

FIG. 156

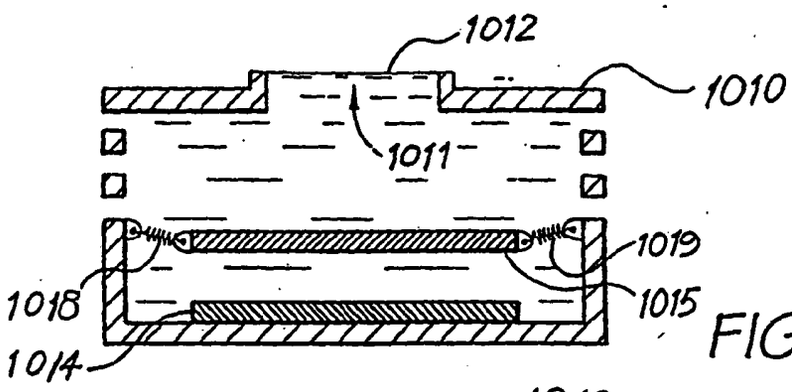

FIG. 157

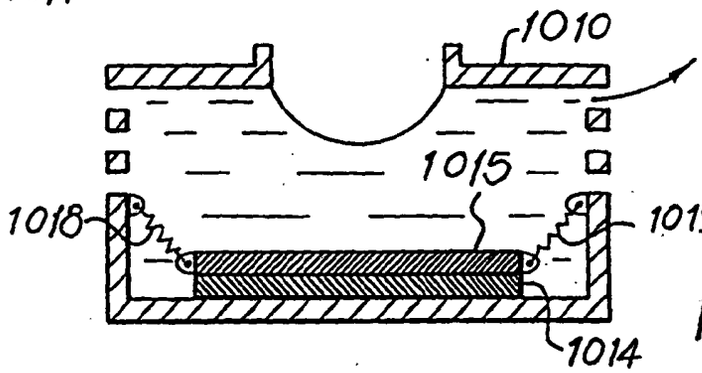

FIG. 158

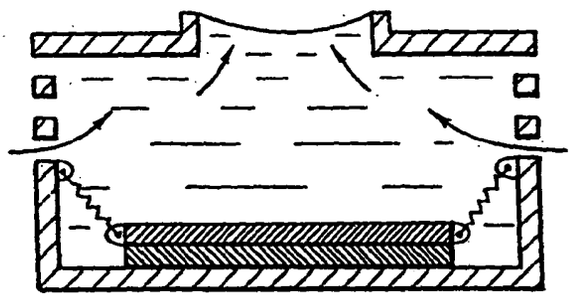

FIG. 159

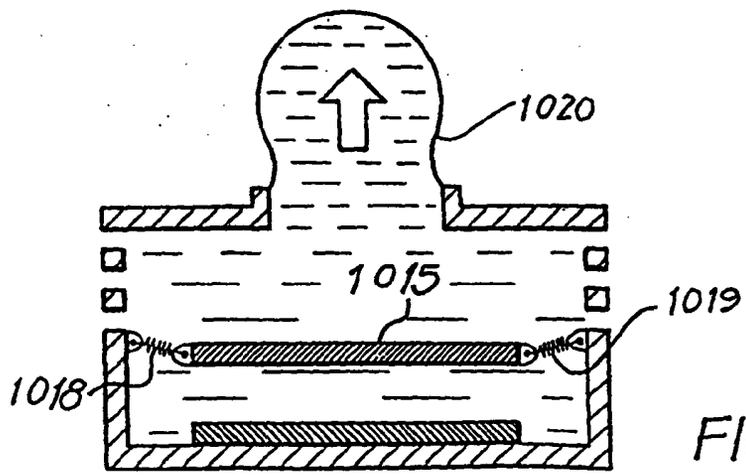

FIG. 160

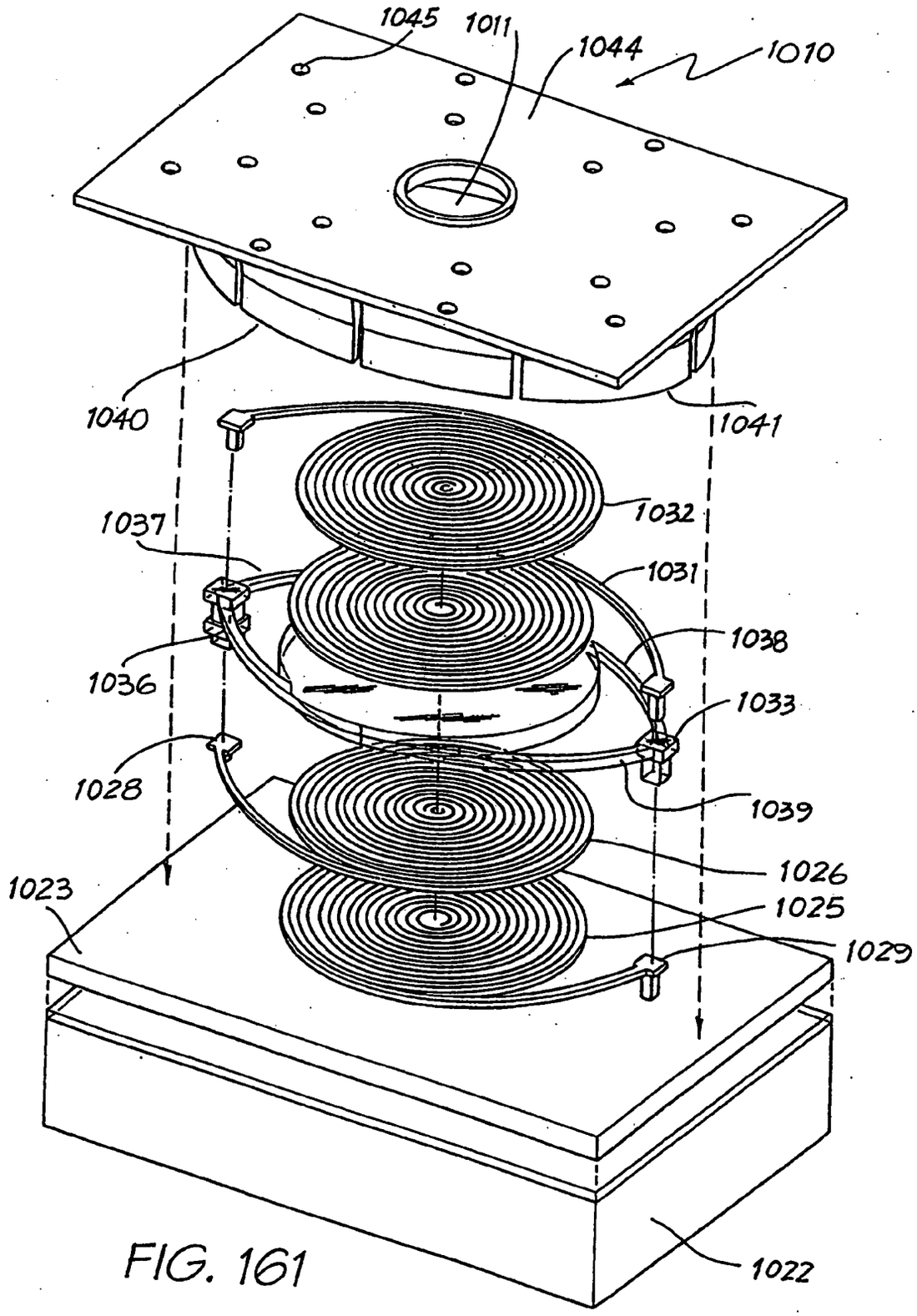
1045
1011
1044
1010
1040
1041
1032
1037
1031
1038
1036
1033
1028
1039
1026
1023
1025
1029
1022

FIG. 161

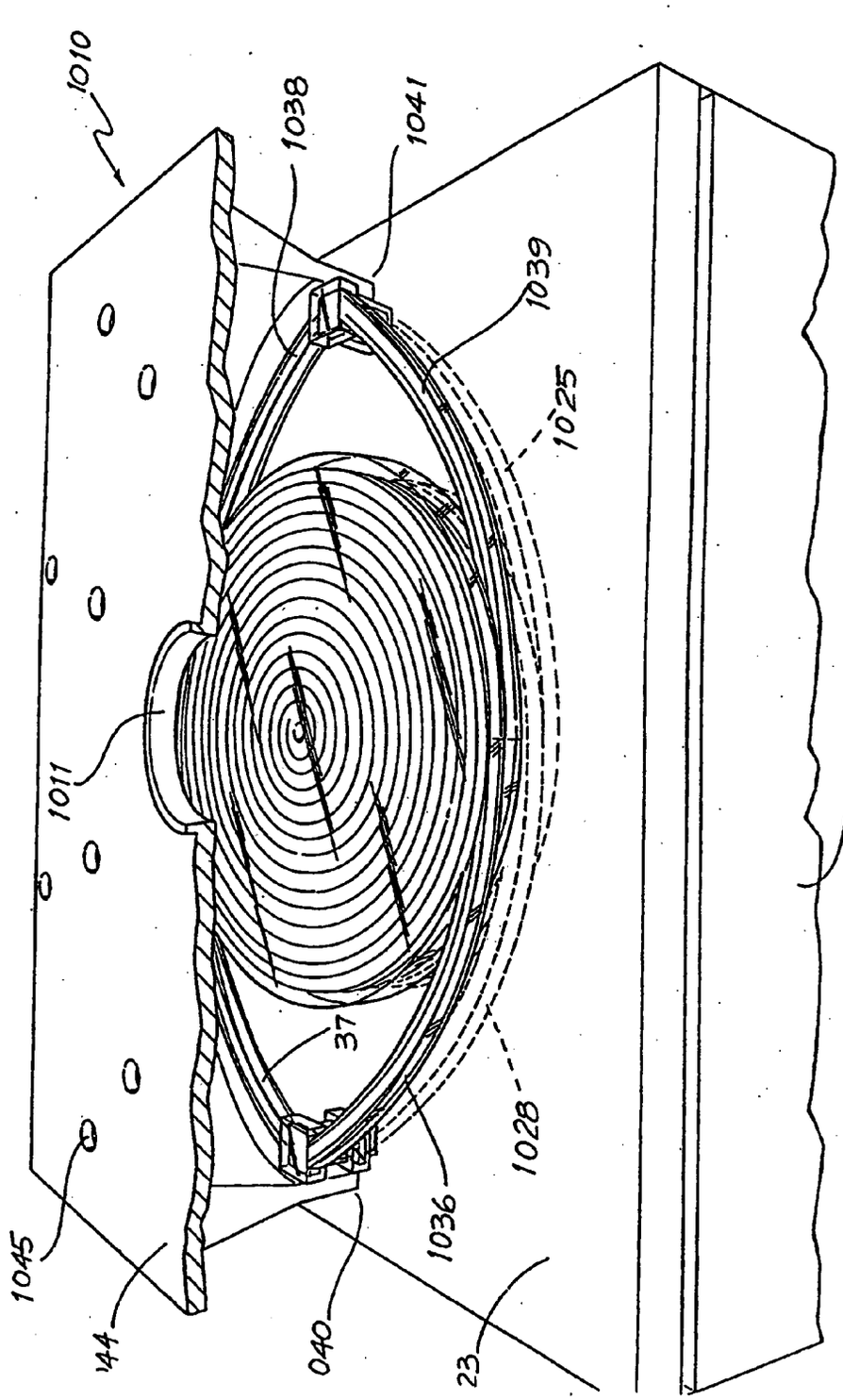
1010
1038
1041
1039
1025
1011
37
1028
1036
1045
144
040
23
1022

FIG. 162

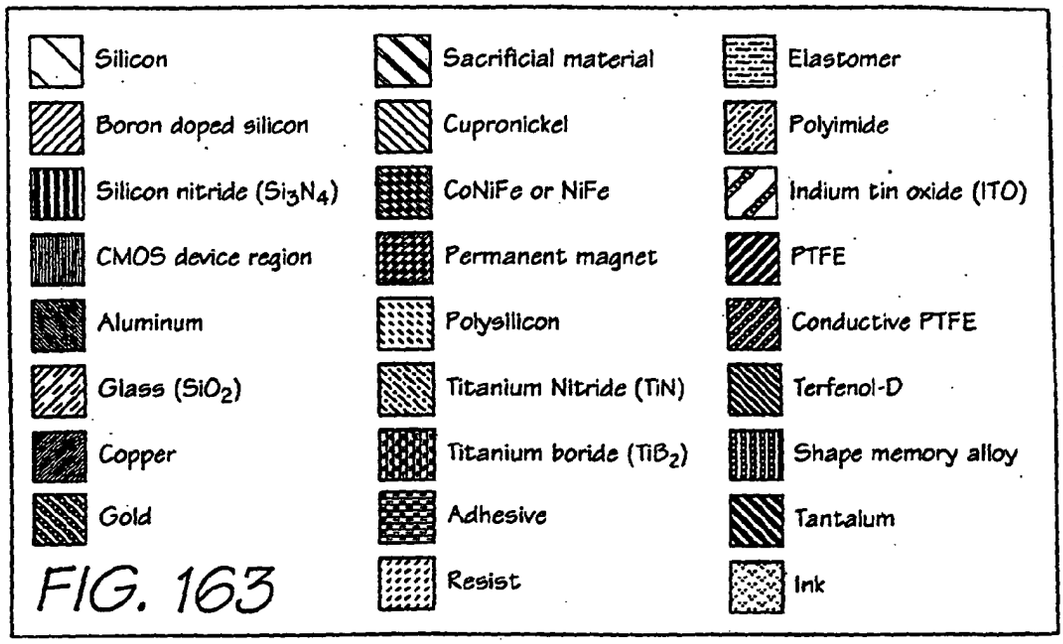

FIG. 163

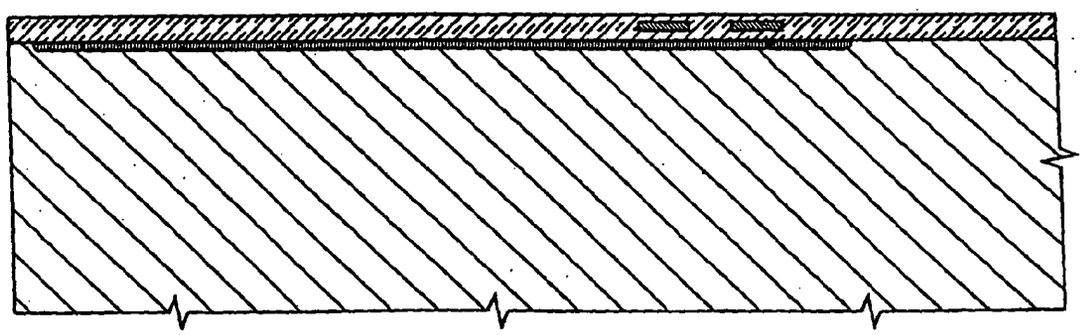

FIG. 164

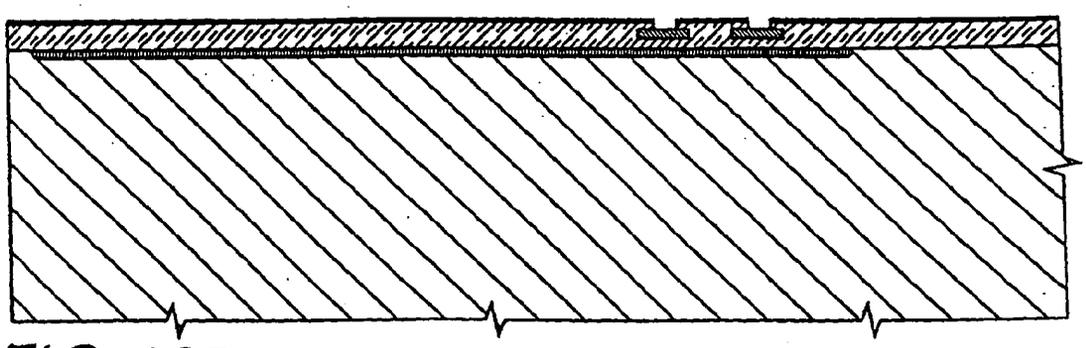

FIG. 165

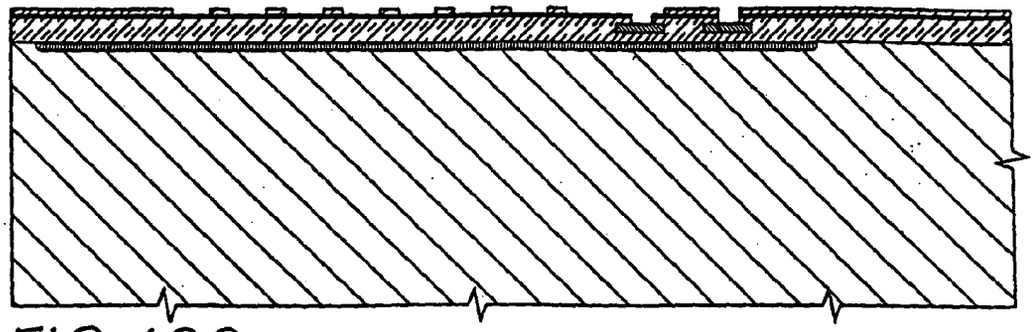

FIG. 166

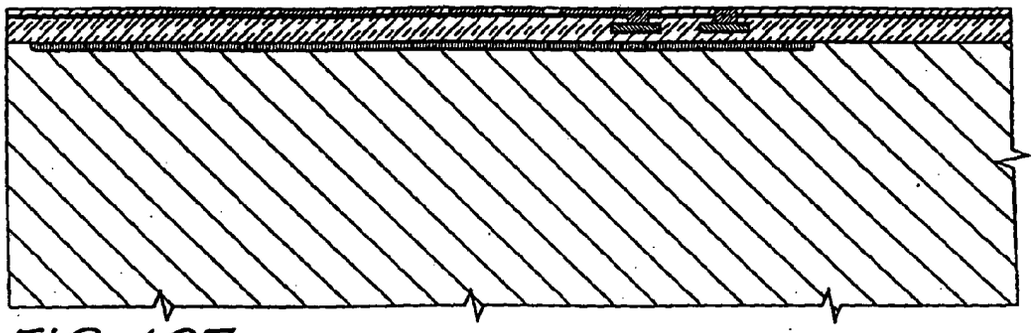

FIG. 167

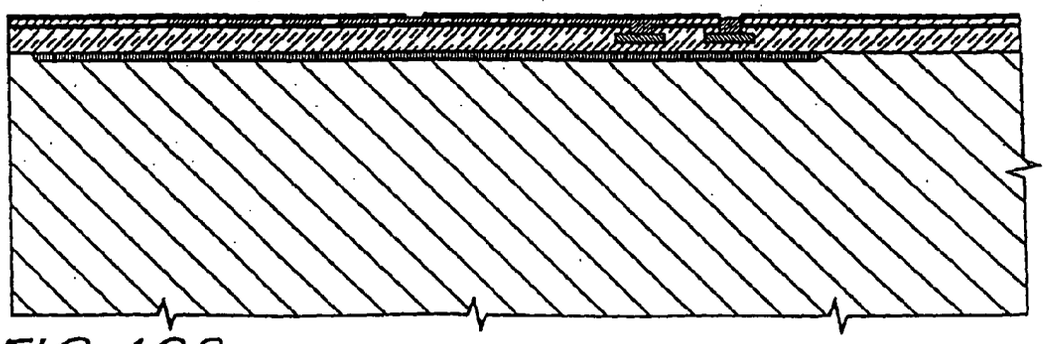

FIG. 168

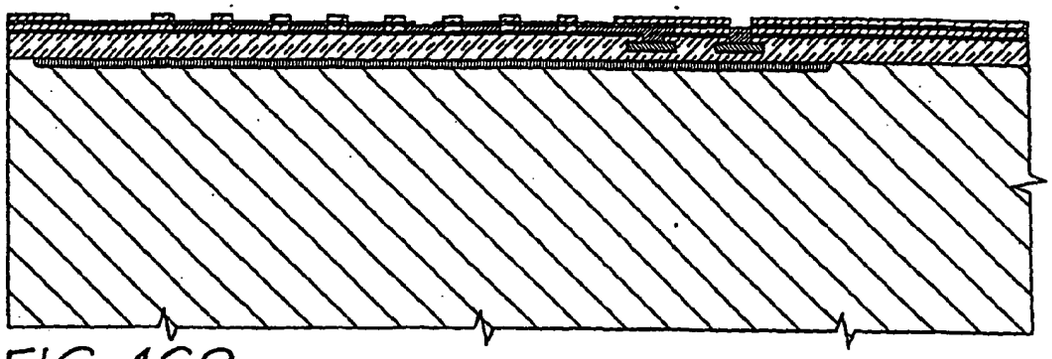

FIG. 169

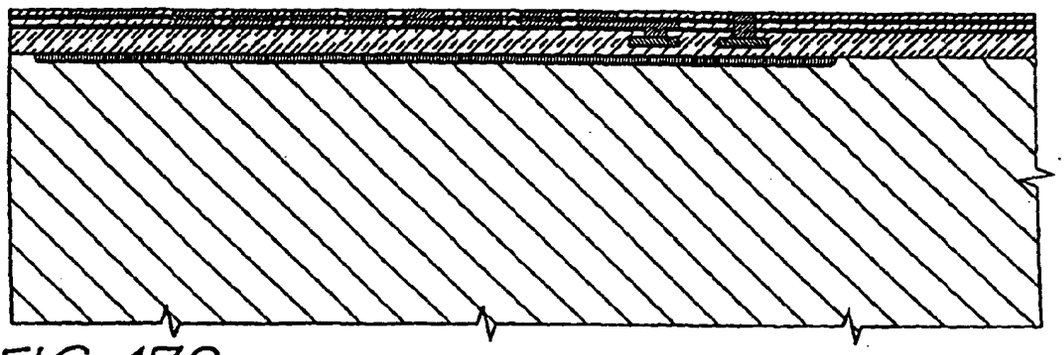

FIG. 170

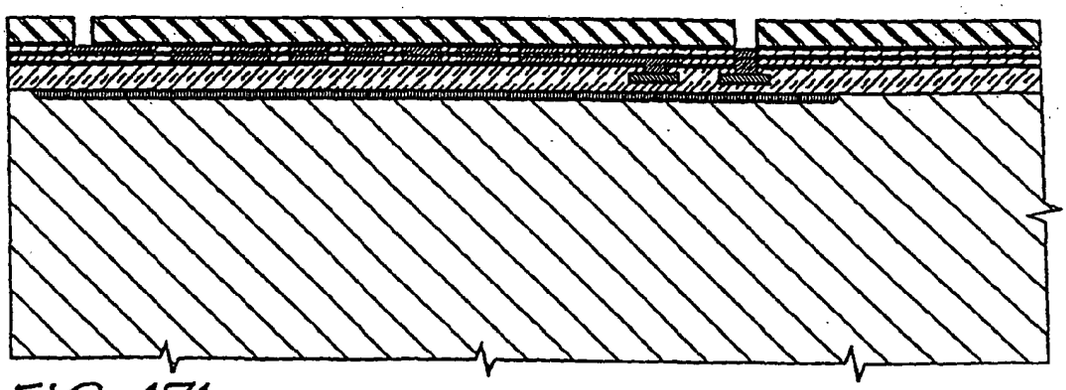

FIG. 171

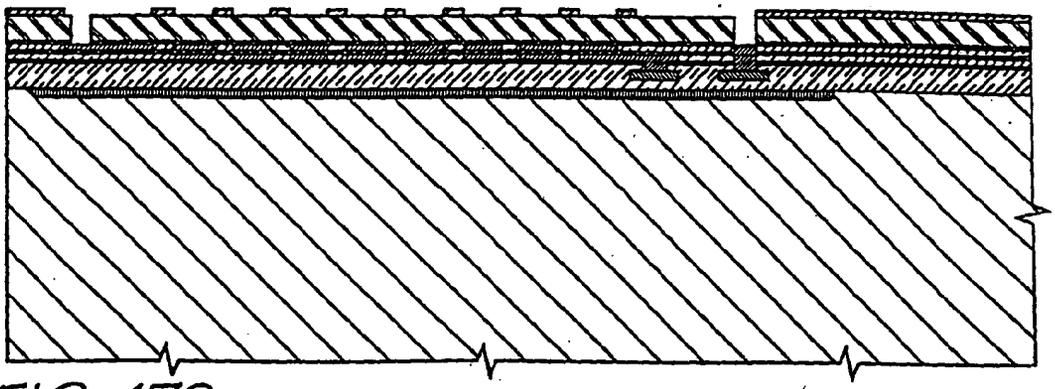

FIG. 172

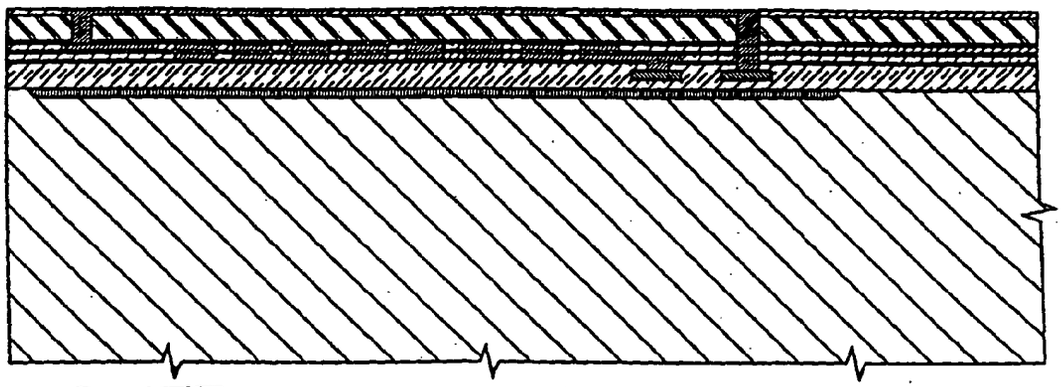

FIG. 173

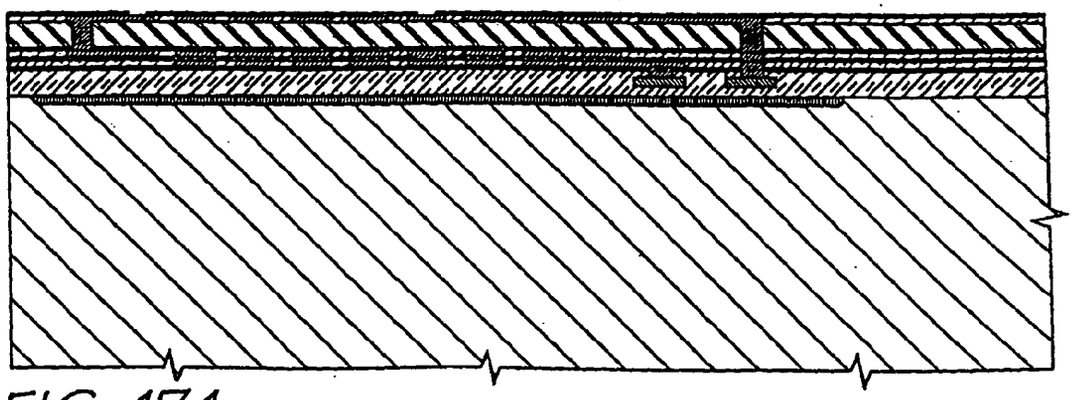

FIG. 174

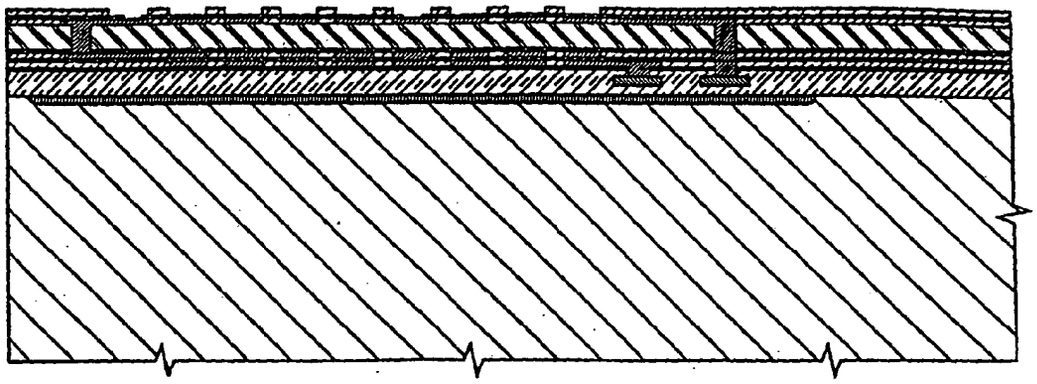

FIG. 175

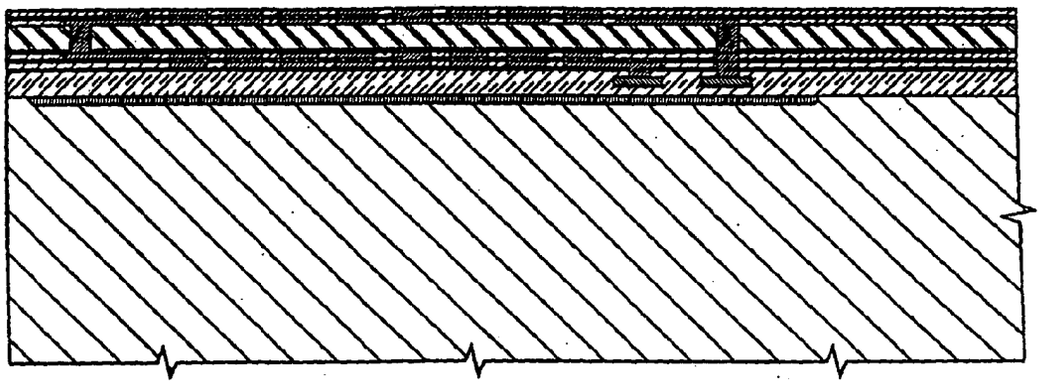

FIG. 176

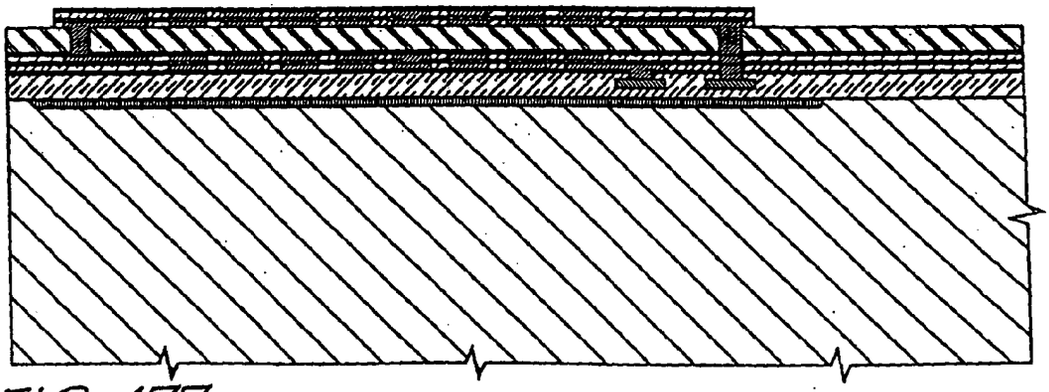

FIG. 177

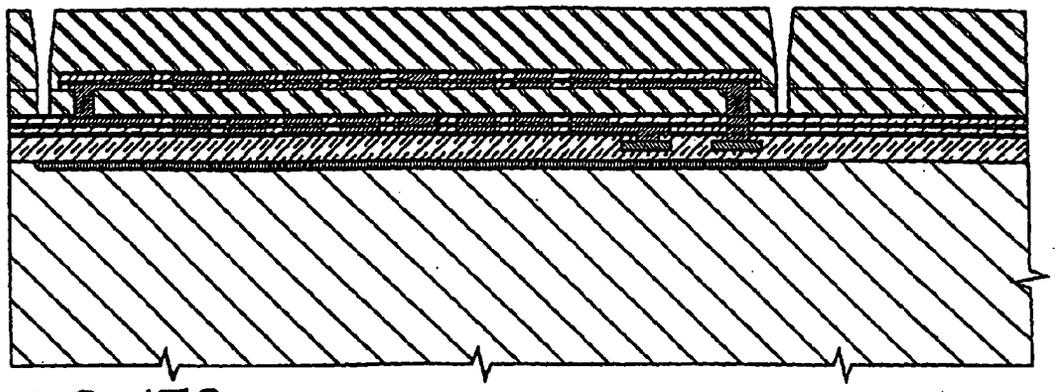

FIG. 178

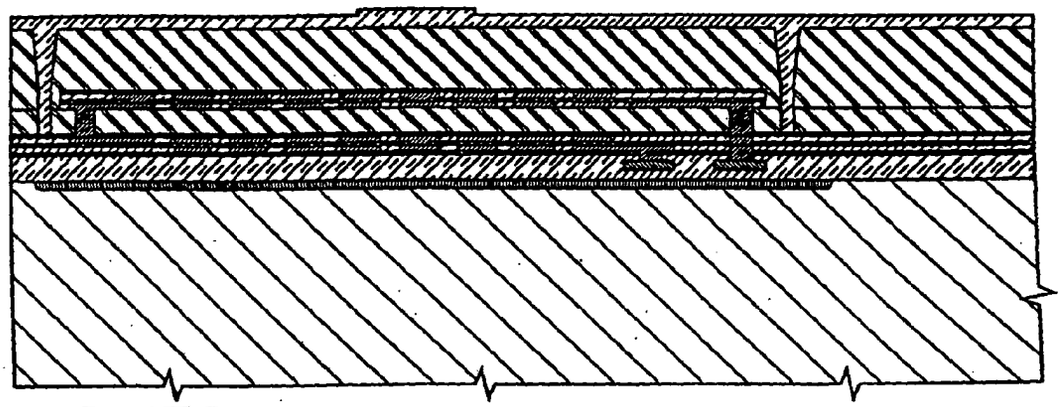

FIG. 179

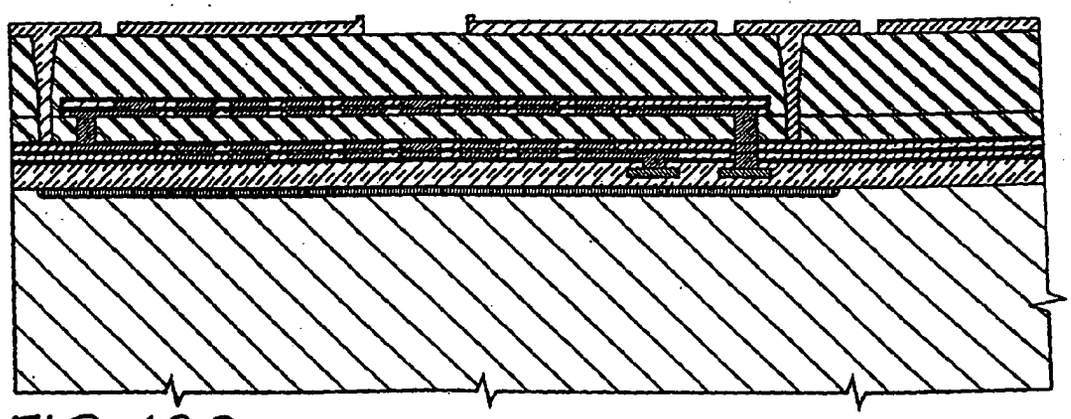

FIG. 180

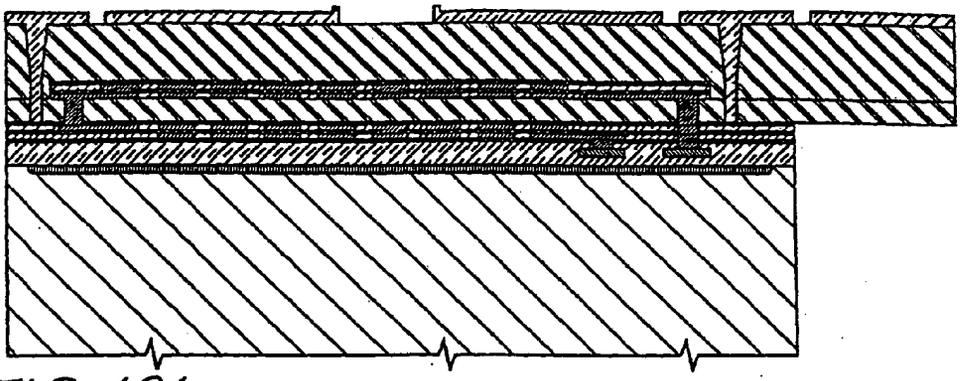

FIG. 181

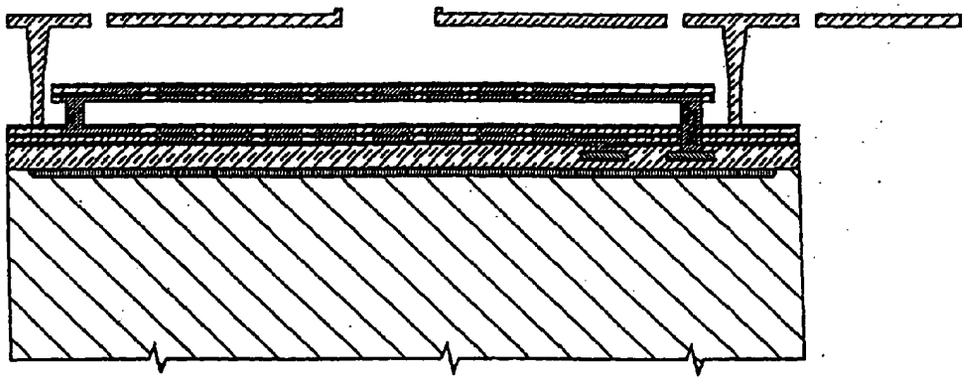

FIG. 182

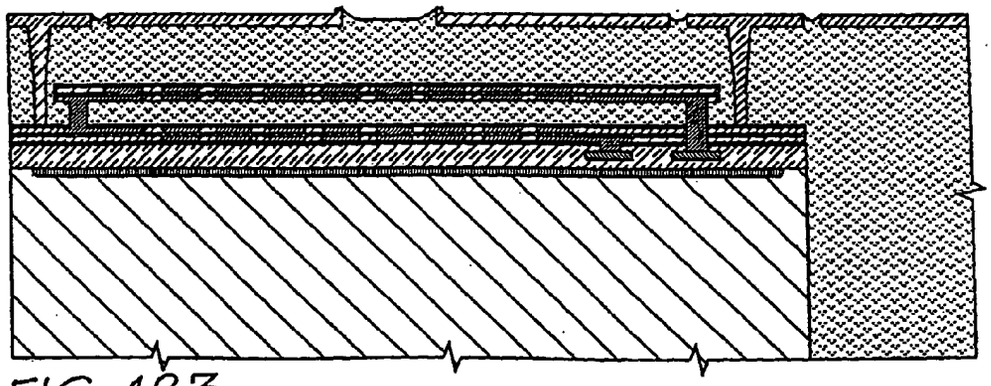

FIG. 183

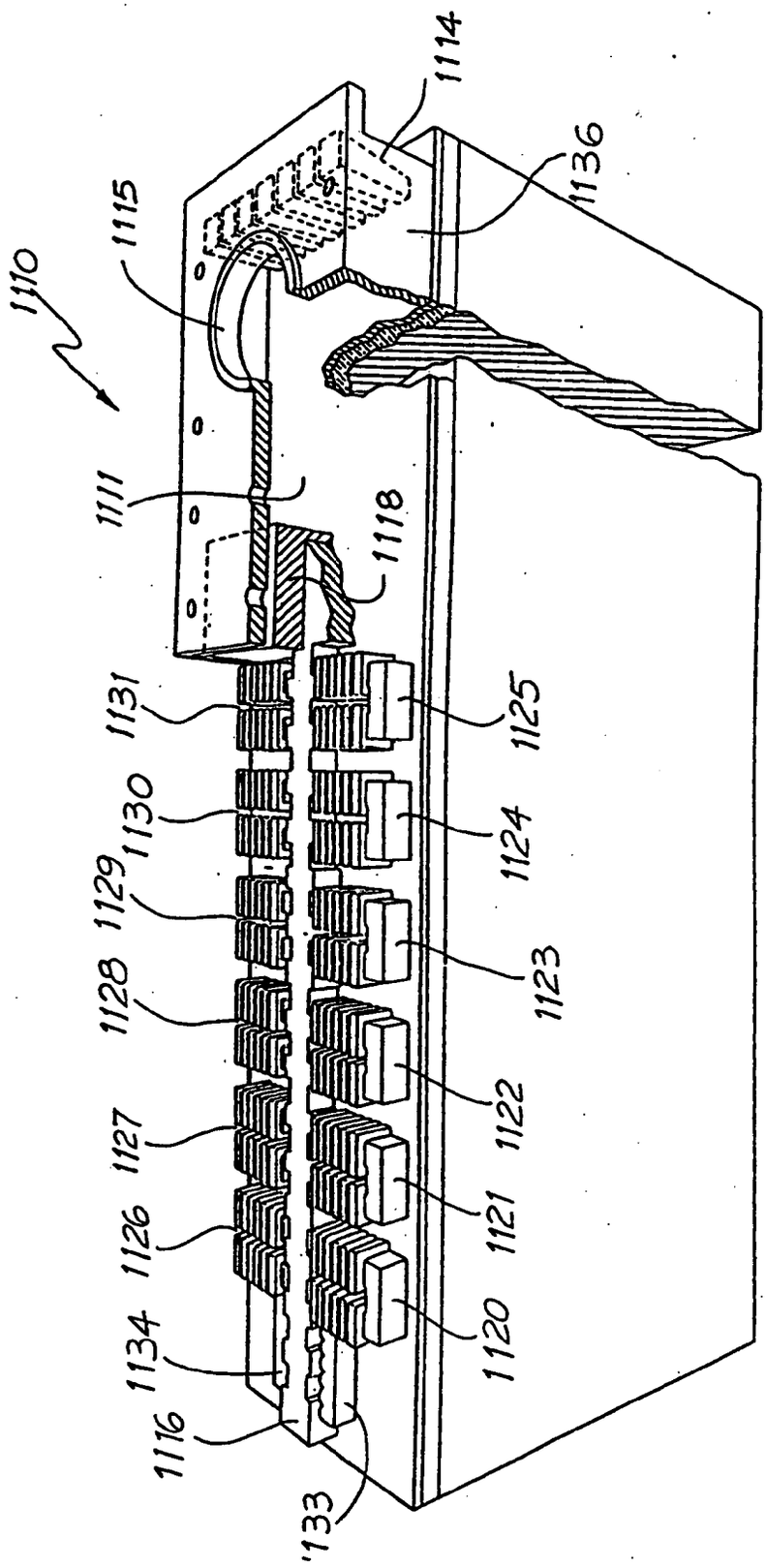
1110
1115
1114
1136
1111
1118
1131
1130
1129
1128
1127
1126
1134
1116
1133
1125
1124
1123
1122
1121
1120

FIG. 184

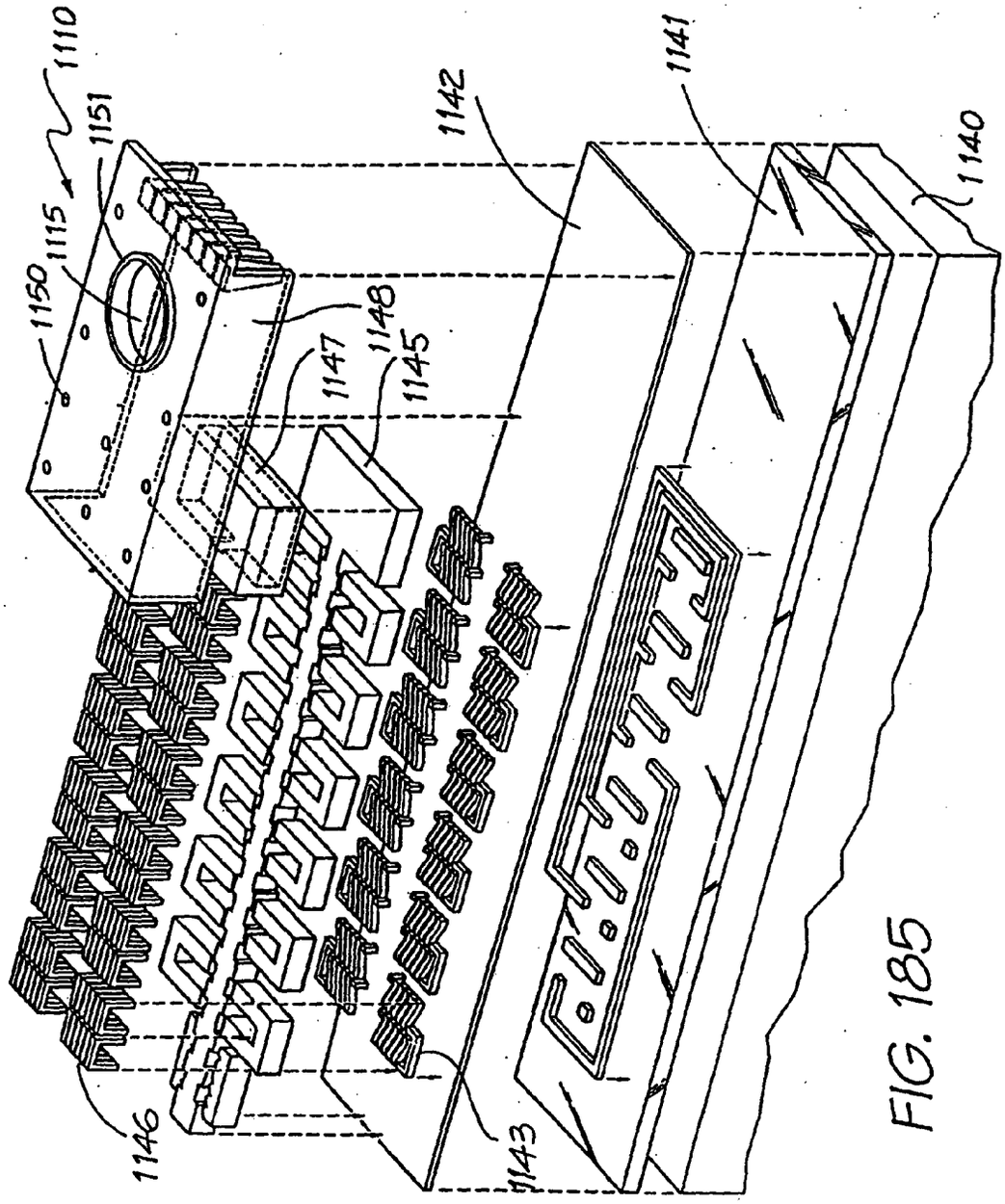

FIG. 185

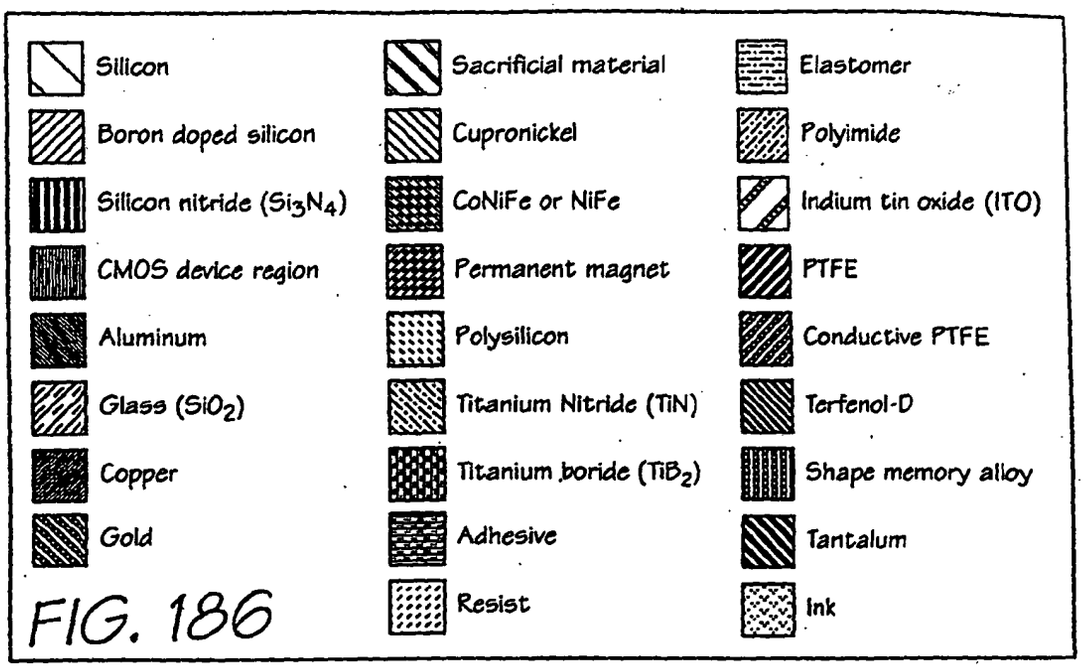

FIG. 186

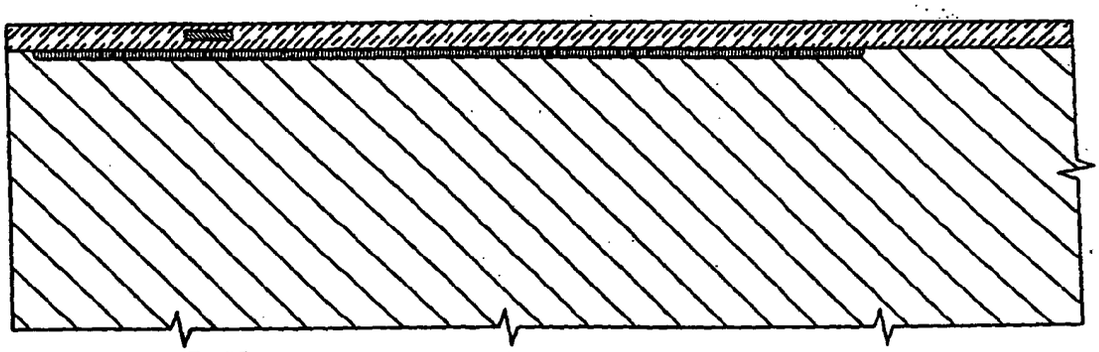

FIG. 187

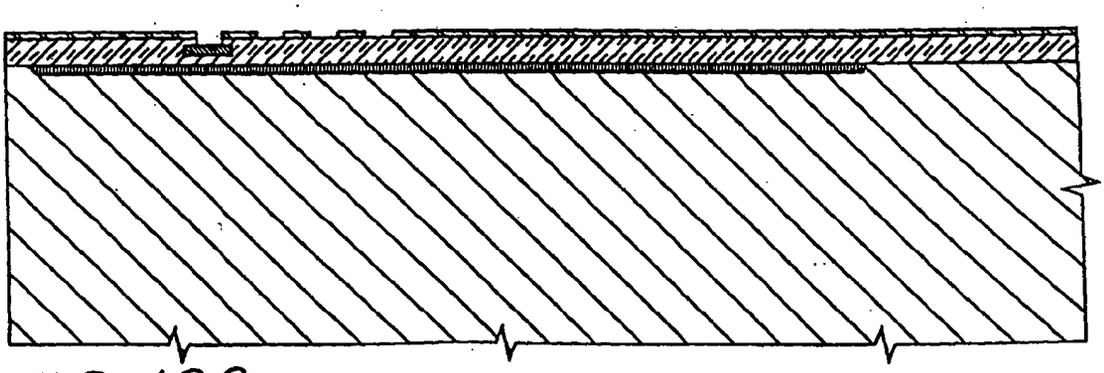

FIG. 188

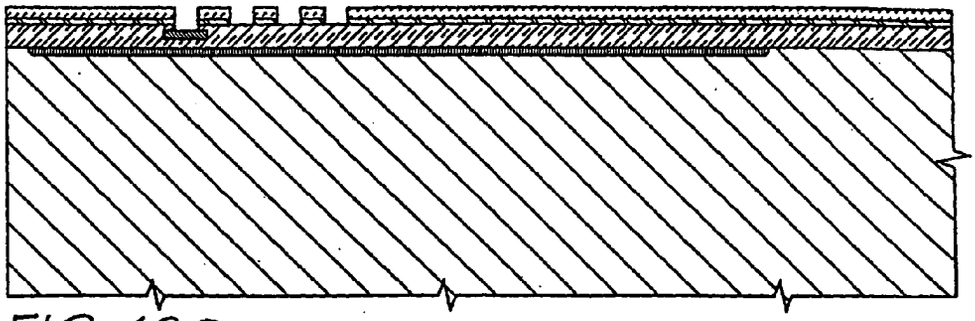

FIG. 189

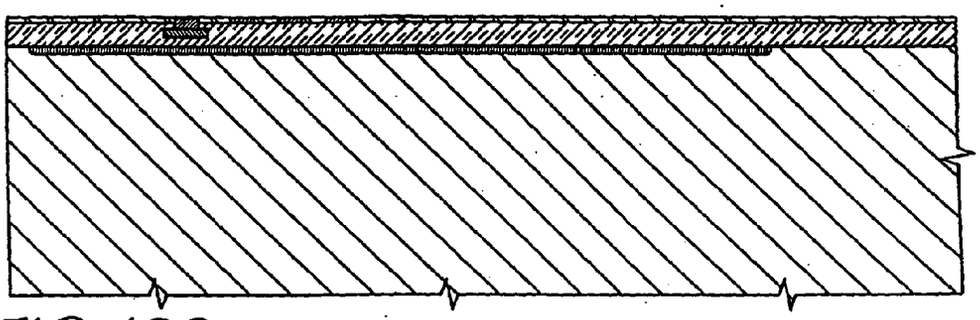

FIG. 190

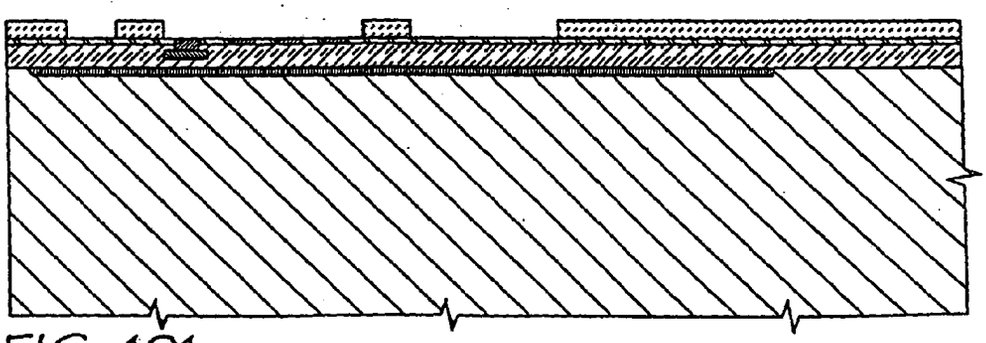

FIG. 191

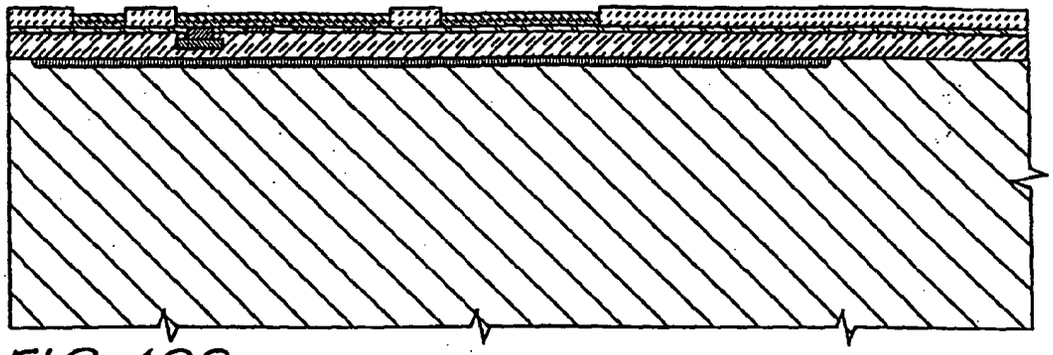

FIG. 192

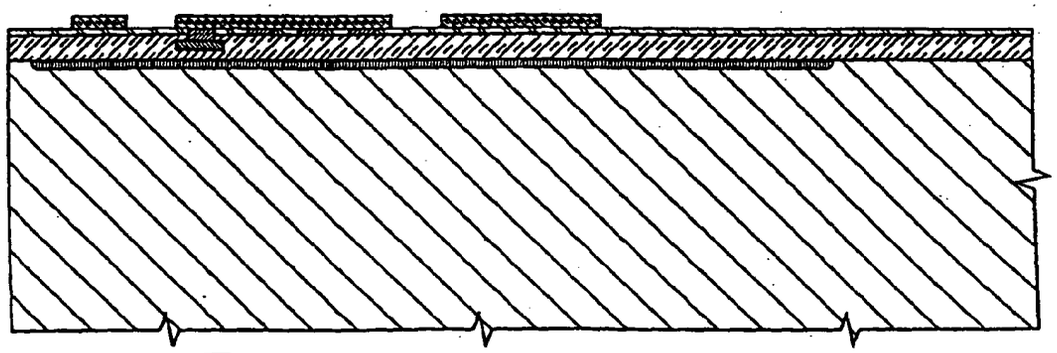

FIG. 193

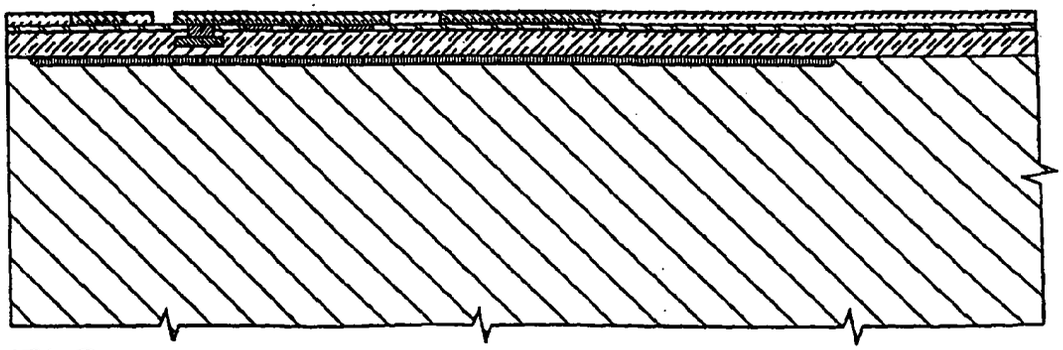

FIG. 194

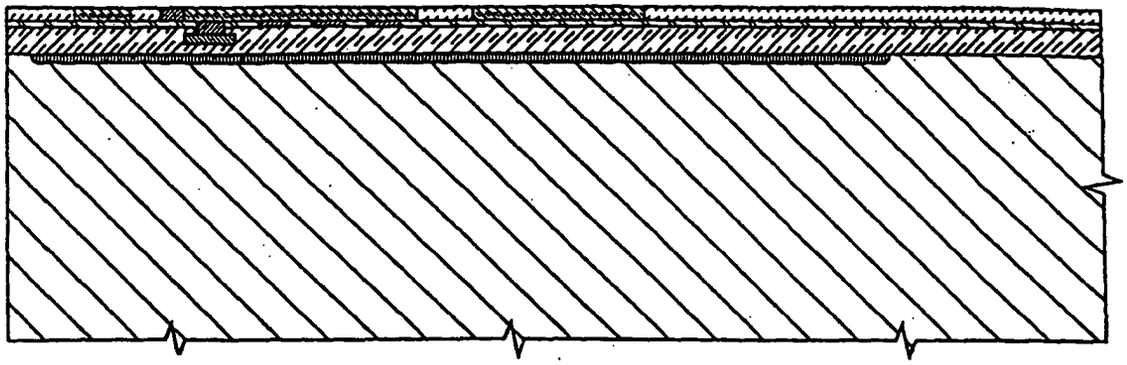

FIG. 195

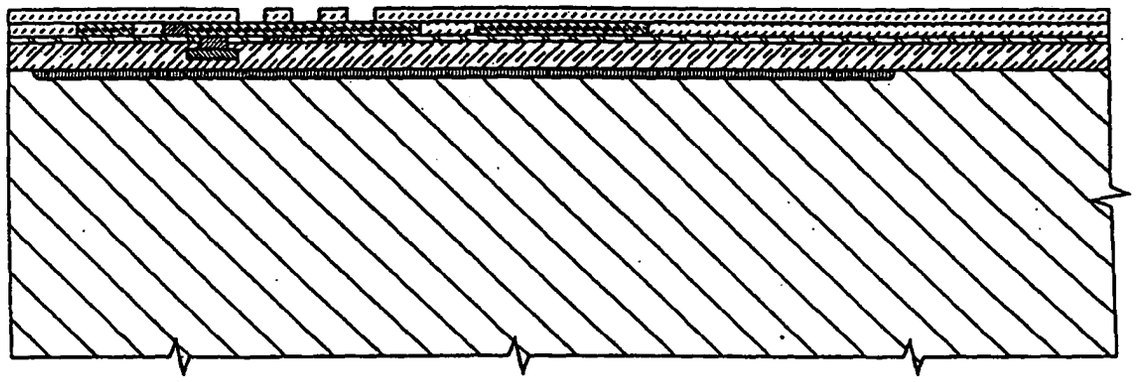

FIG. 196

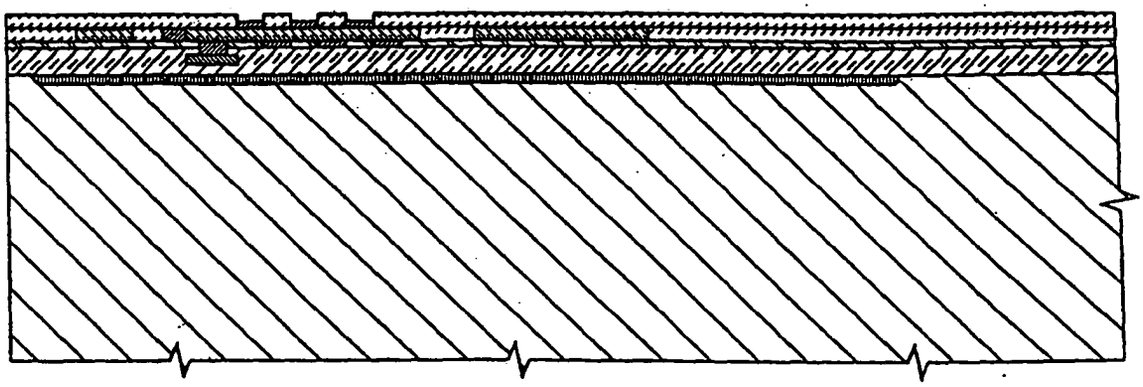

FIG. 197

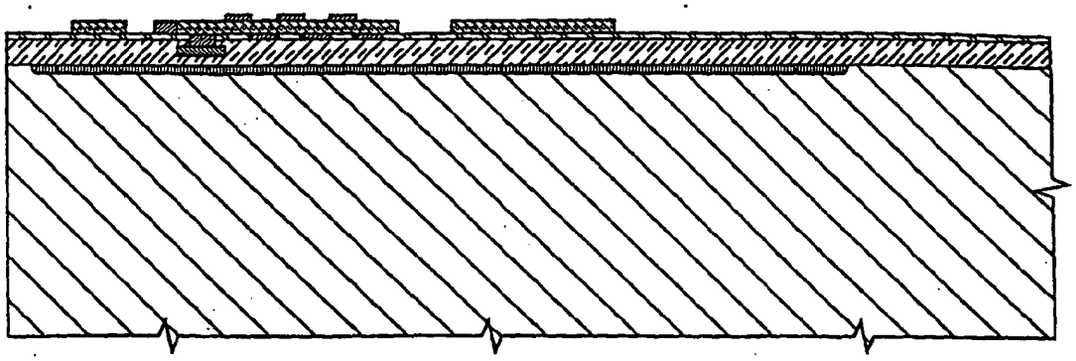

FIG. 198

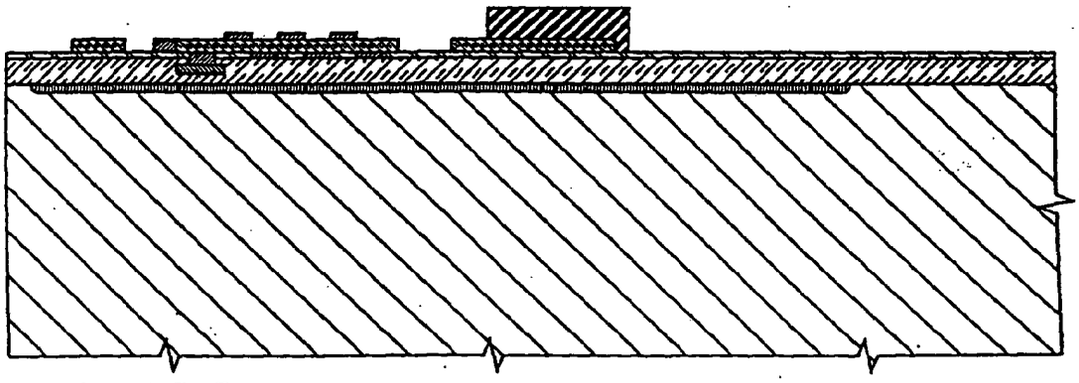

FIG. 199

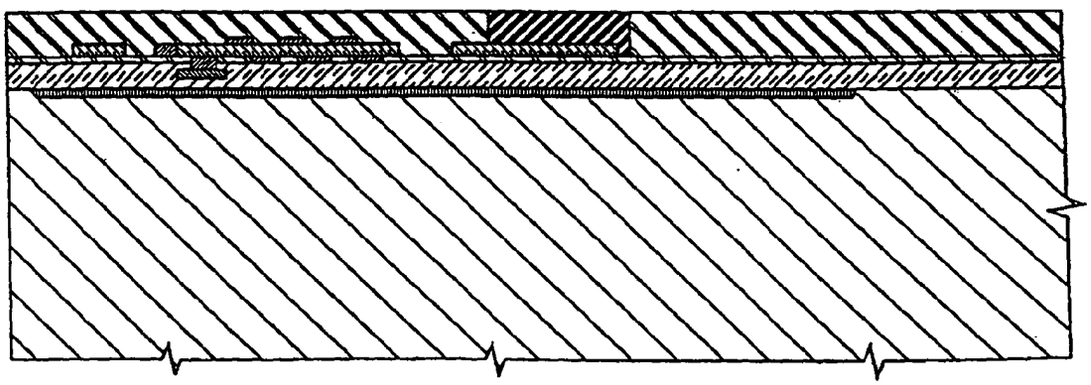

FIG. 200

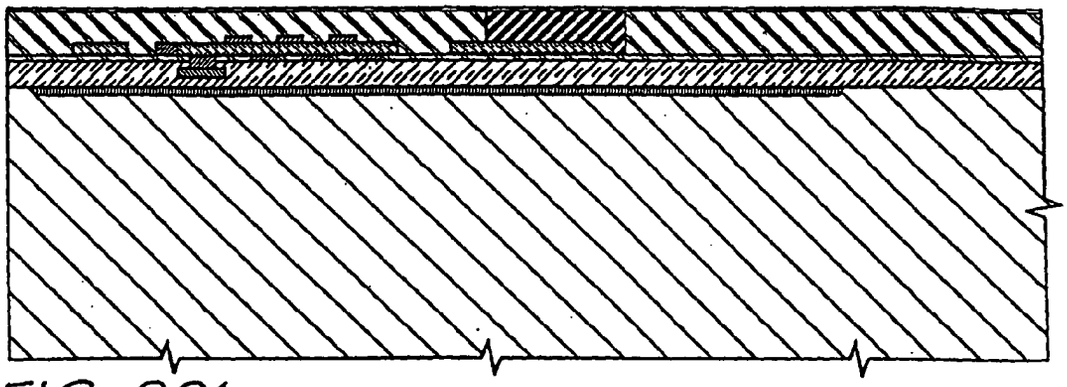

FIG. 201

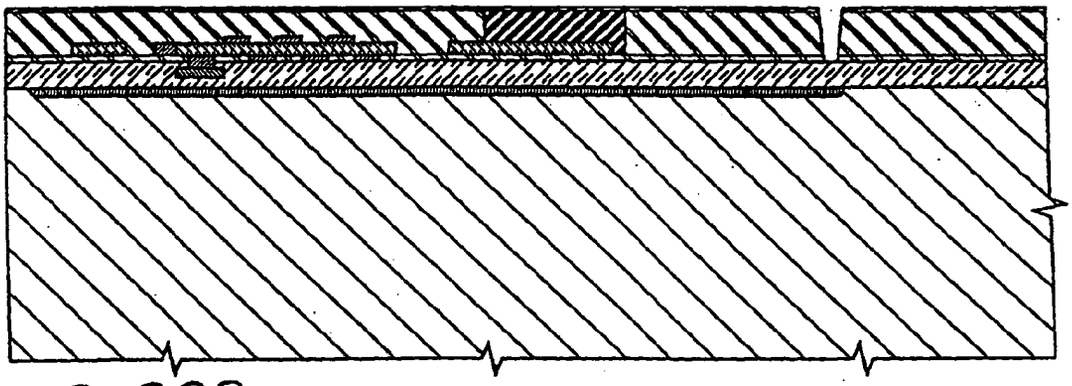

FIG. 202

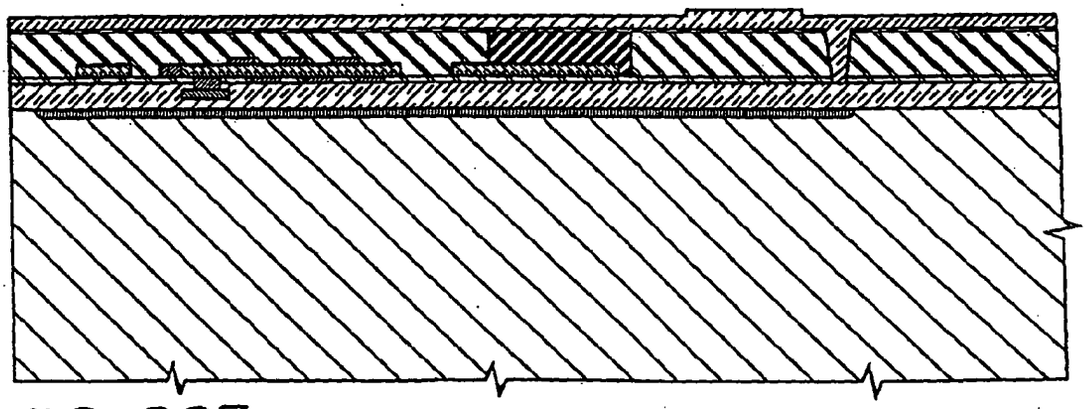

FIG. 203

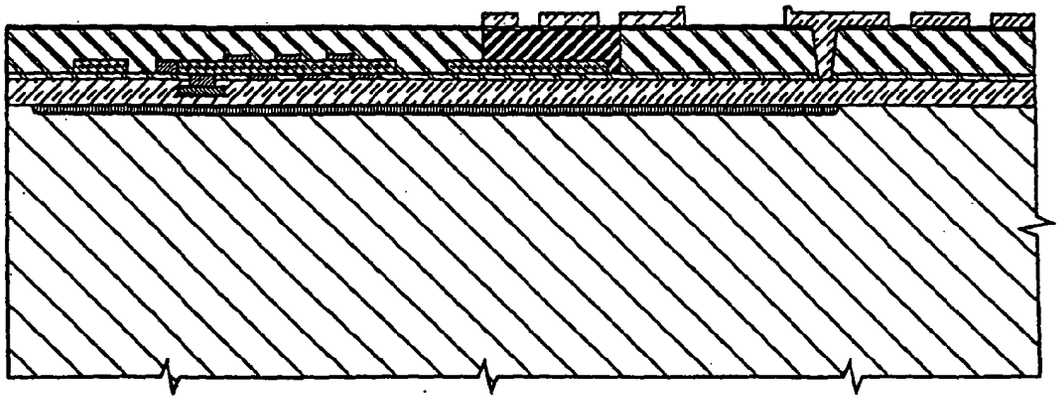

FIG. 204

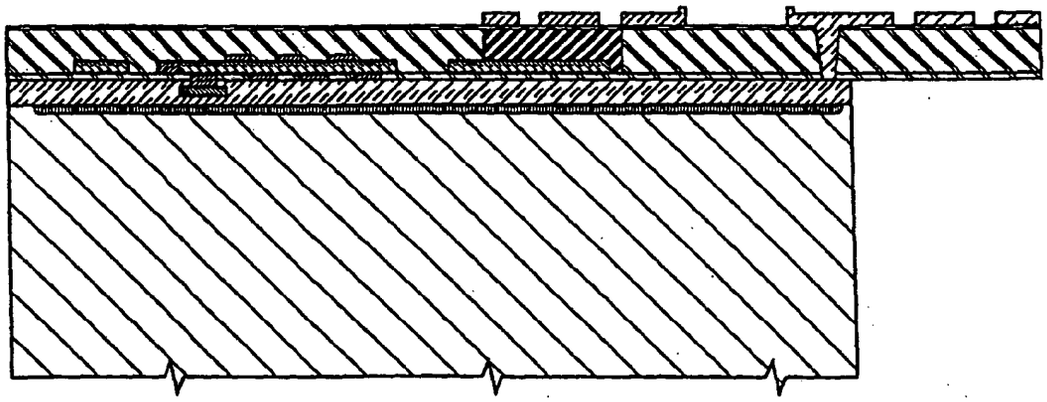

FIG. 205

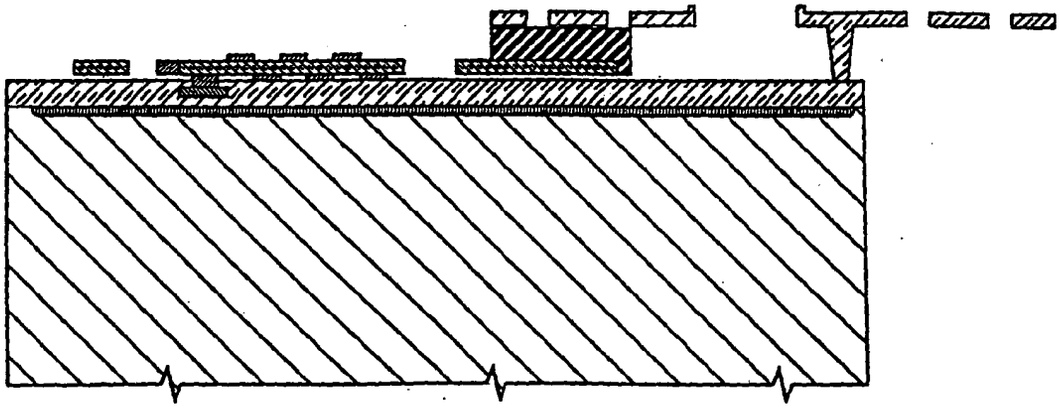

FIG. 206

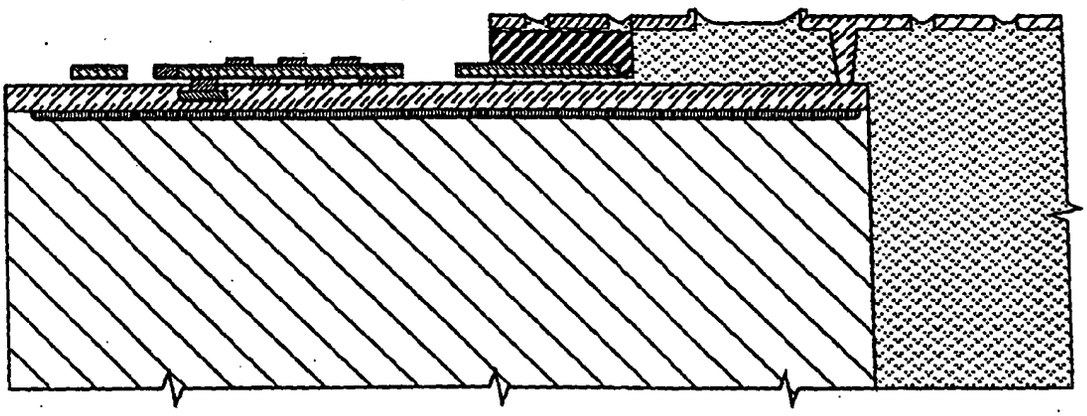

FIG. 207

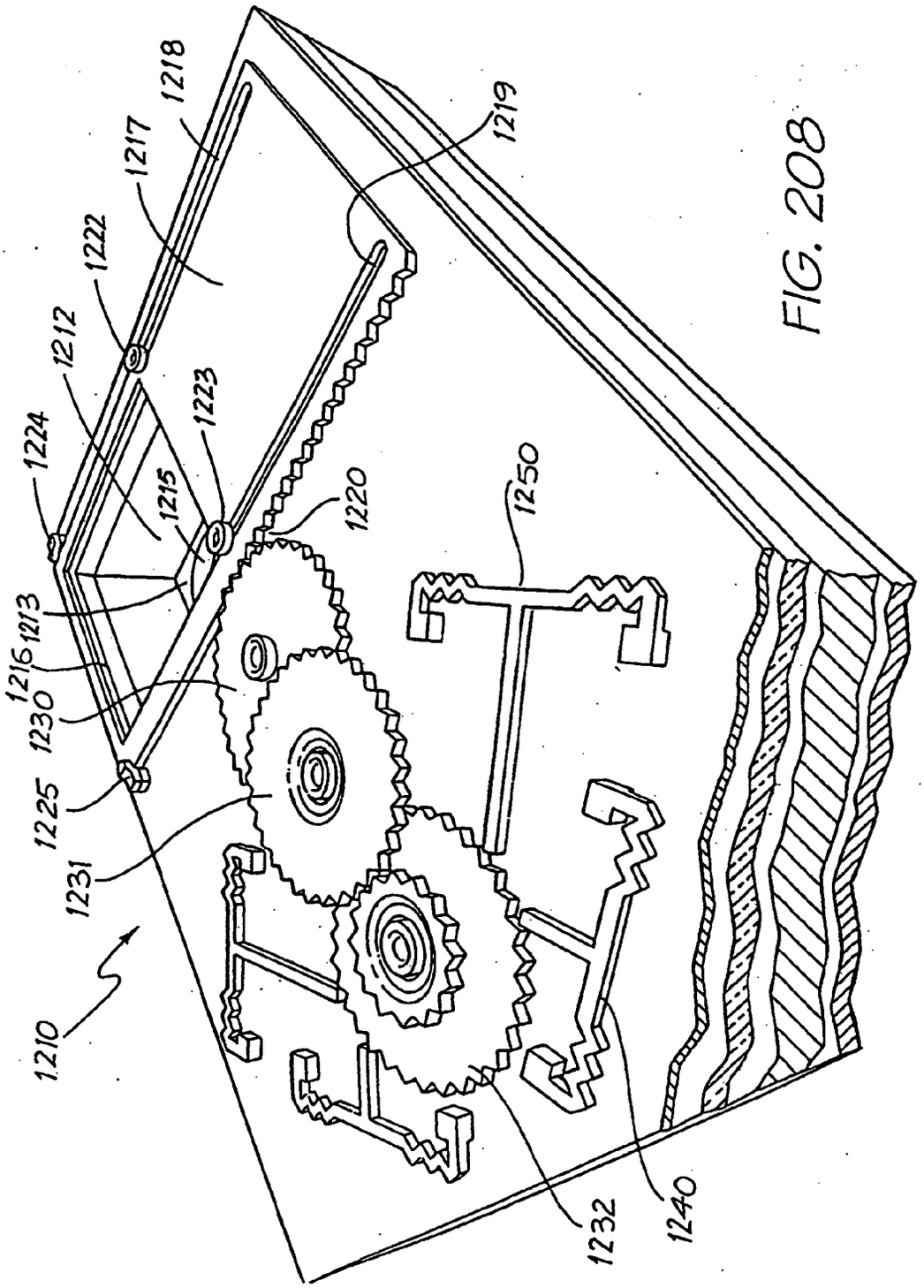
1210
1225
1230
1216
1213
1224
1212
1222
1217
1218
1231
1215
1223
1220
1219
1250
1232
1240

FIG. 208

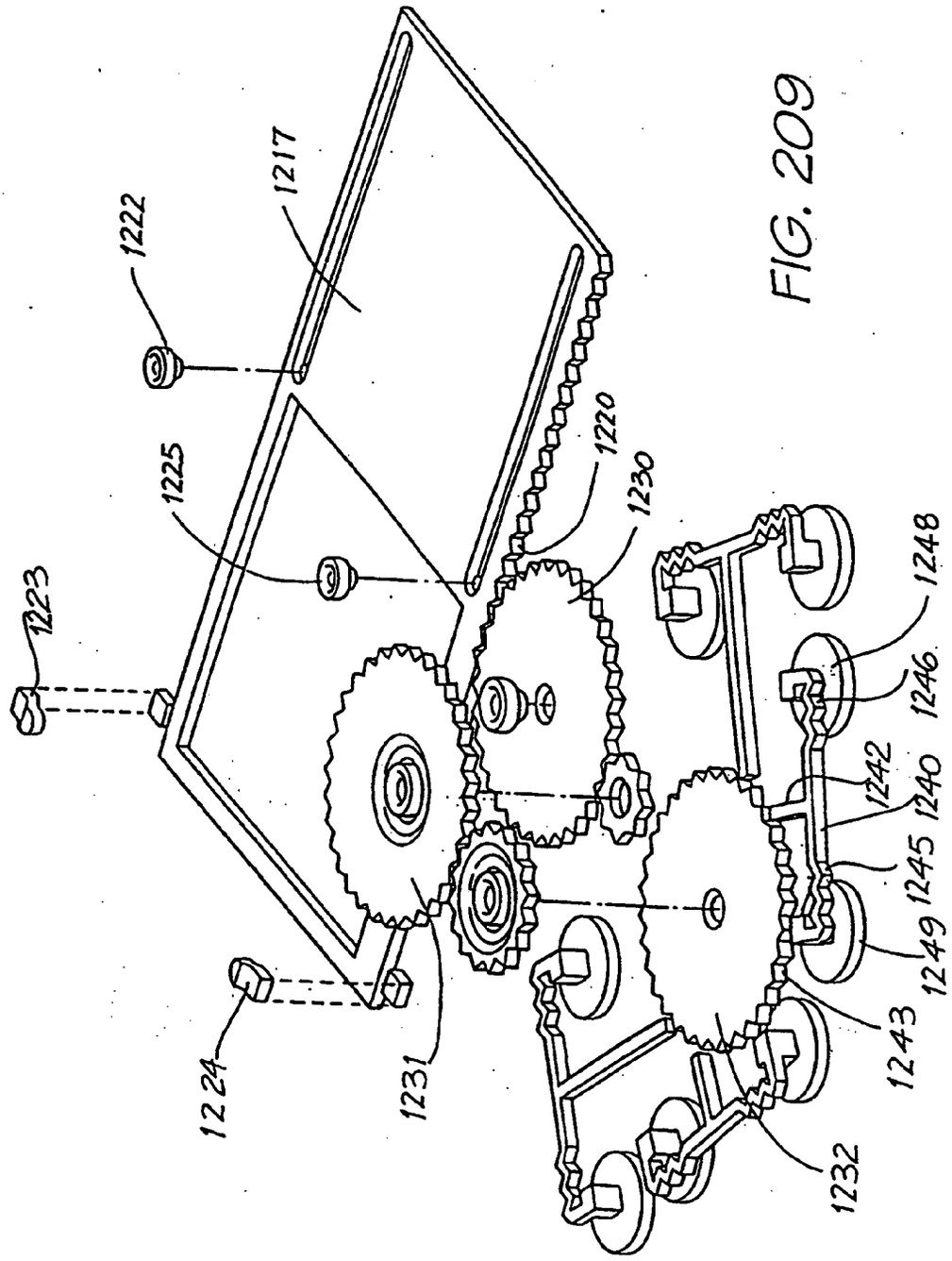
1222
1217
1225
1223
1220
1230
1248
1246
1242
1240
1245
1249
1243
1232
1231
1224

FIG. 209

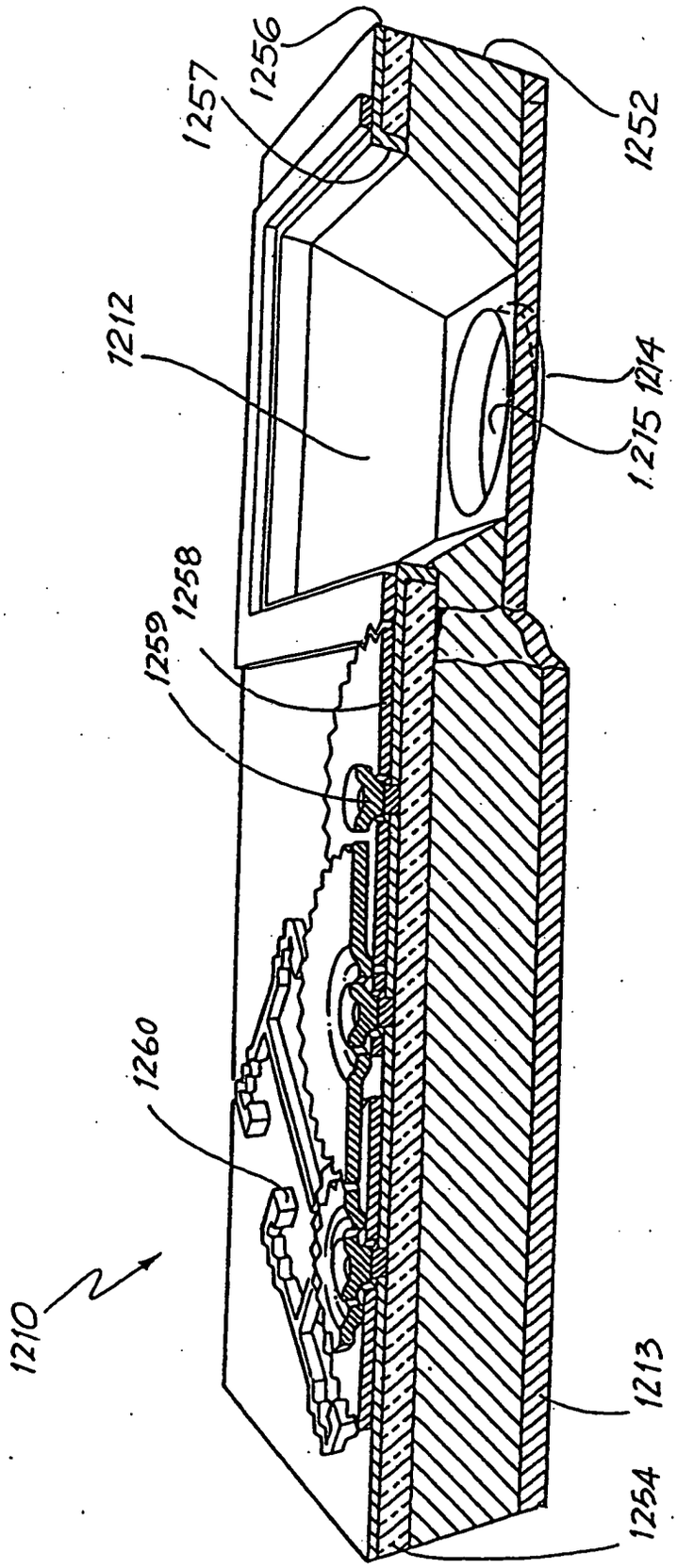

FIG. 210

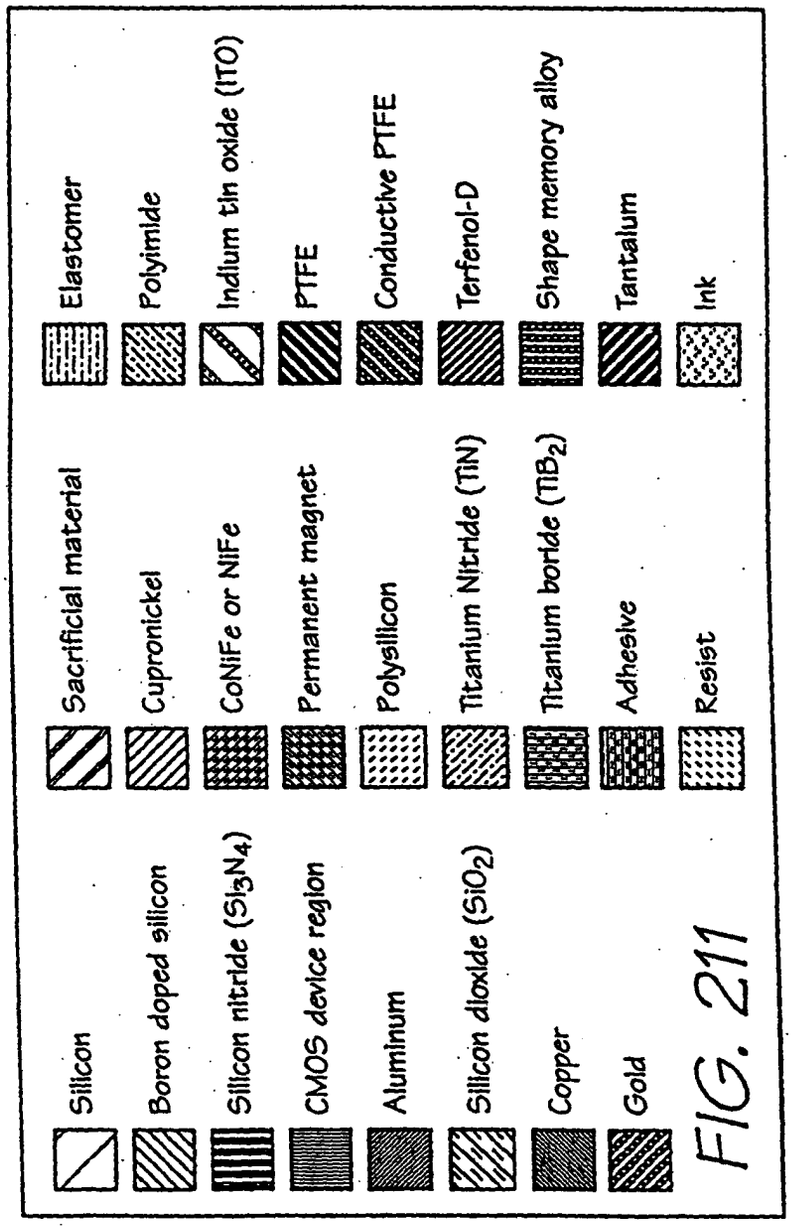
Silicon
Boron doped silicon
Silicon nitride (Si_3N_4)
CMOS device region
Aluminum
Silicon dioxide (SiO_2)
Copper
Gold
Sacrificial material
Cupronickel
CoNiFe or NiFe
Permanent magnet
Polysilicon
Titanium Nitride (TiN)
Titanium boride (TiB_2)
Adhesive
Resist
Elastomer
Polyimide
Indium tin oxide (ITO)
PTFE
Conductive PTFE
Terfenol-D
Shape memory alloy
Tantalum
Ink

FIG. 211

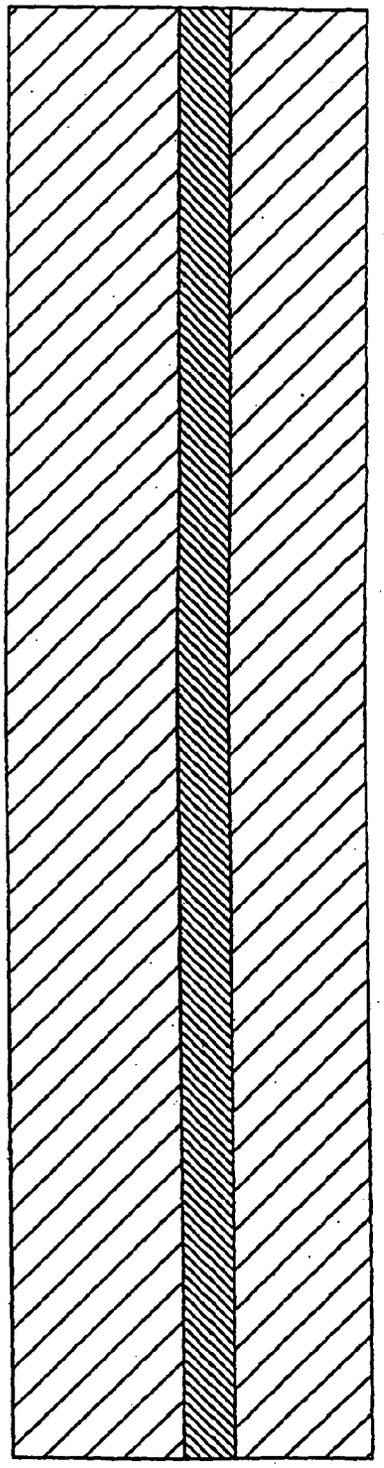

FIG. 212

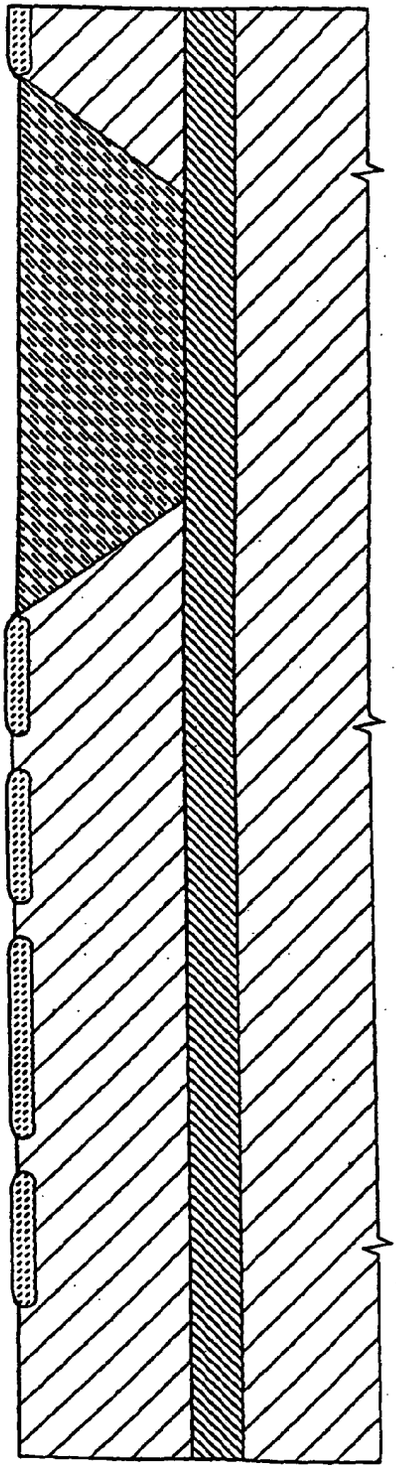

FIG. 213

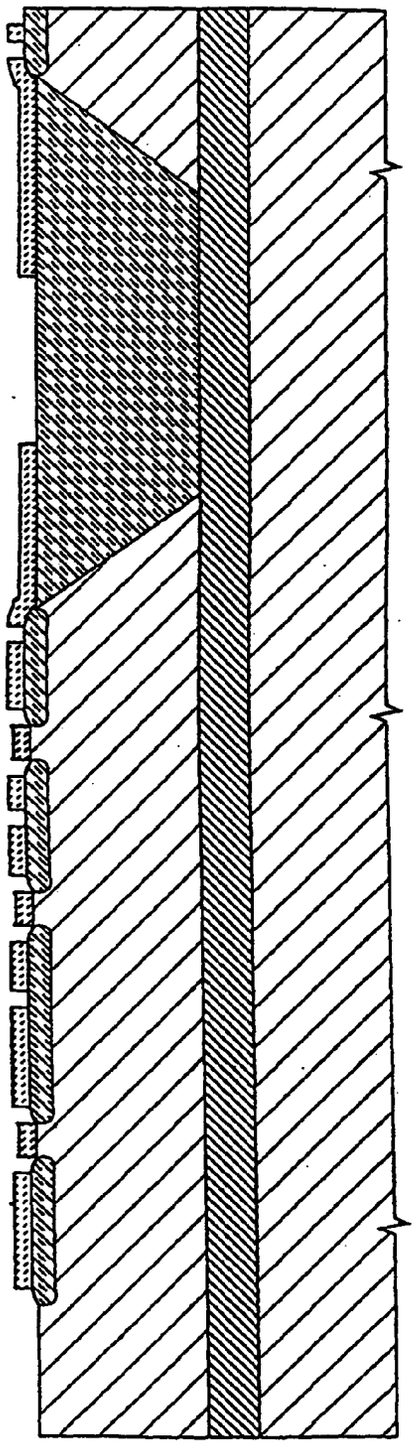

FIG. 214

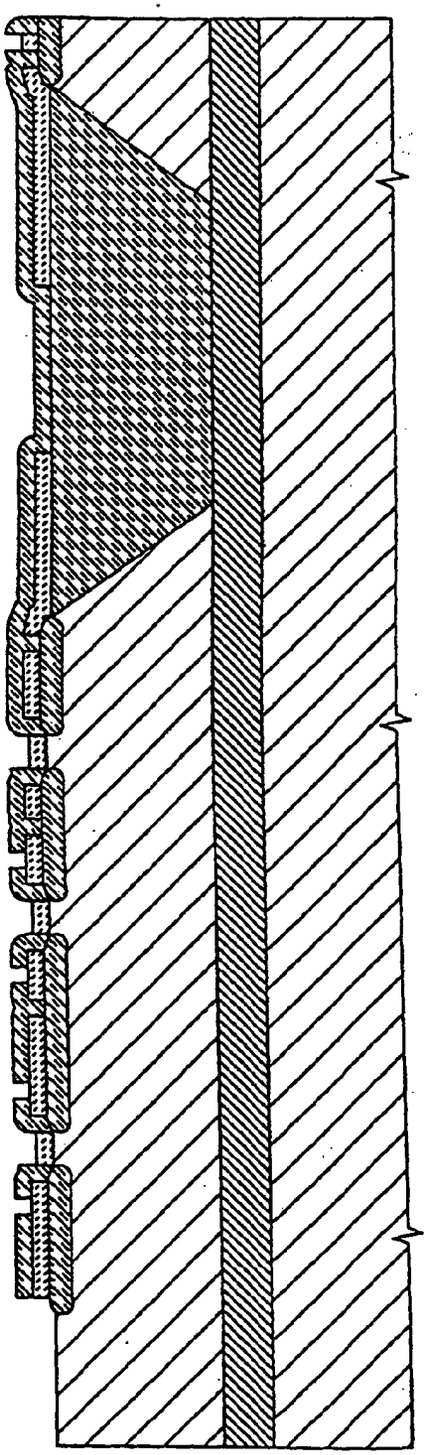

FIG. 215

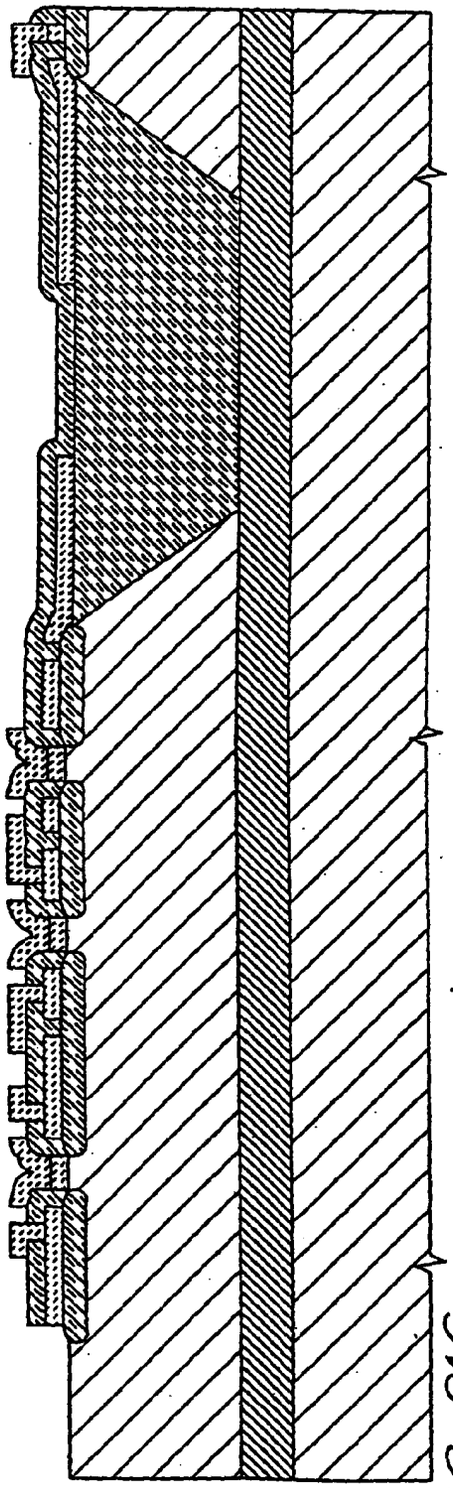

FIG. 216

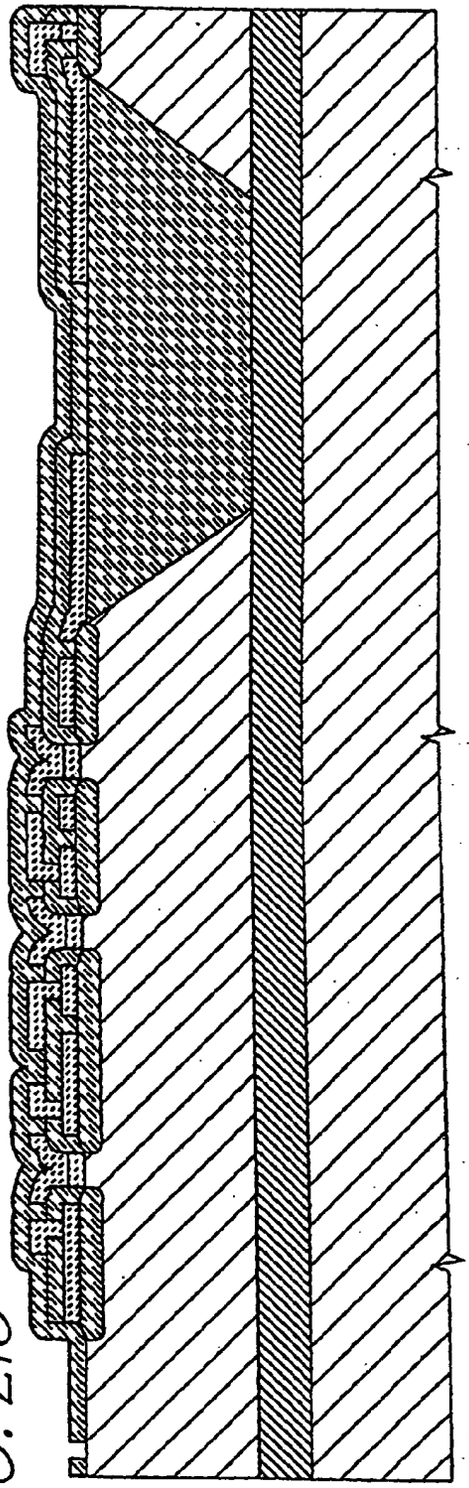

FIG. 217

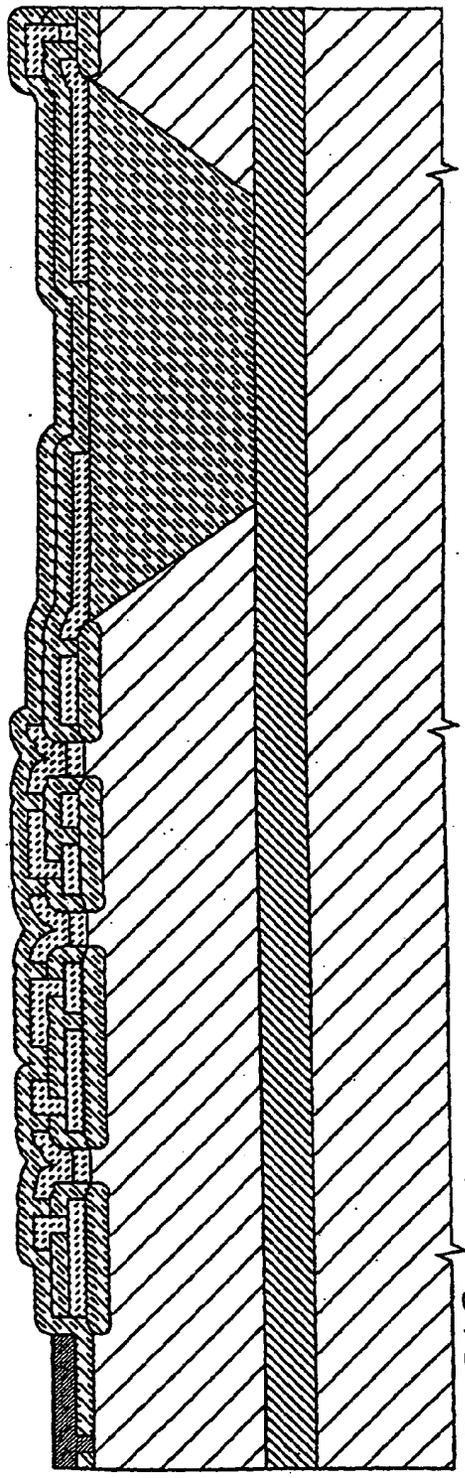

FIG. 218

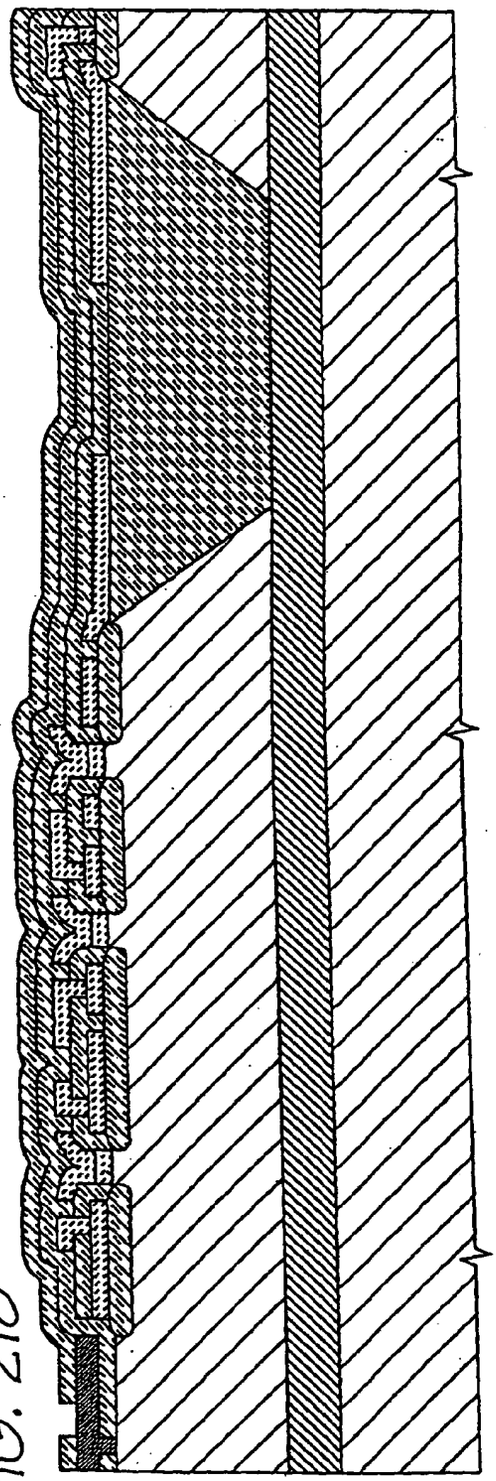

FIG. 219

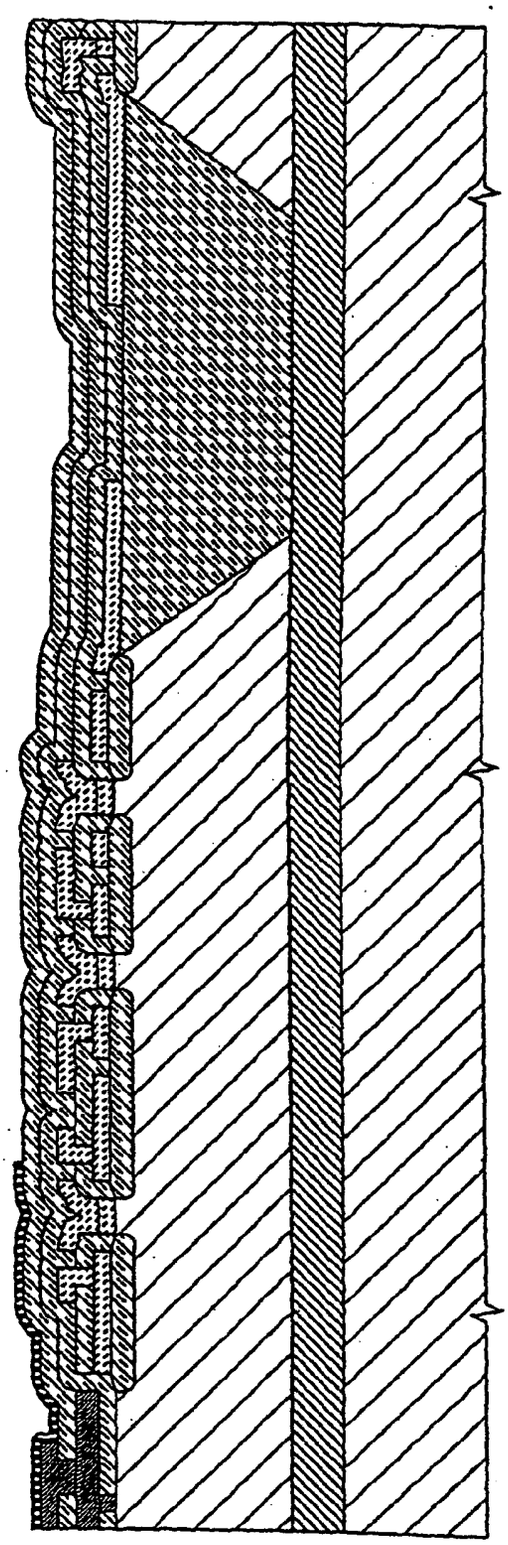

FIG. 220

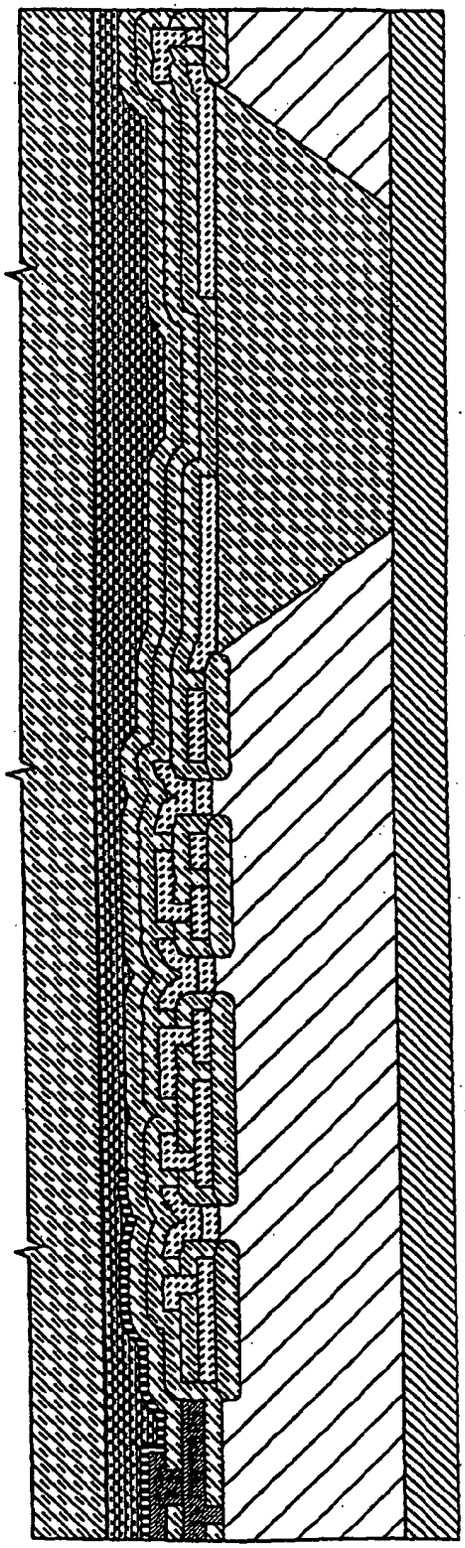

FIG. 221

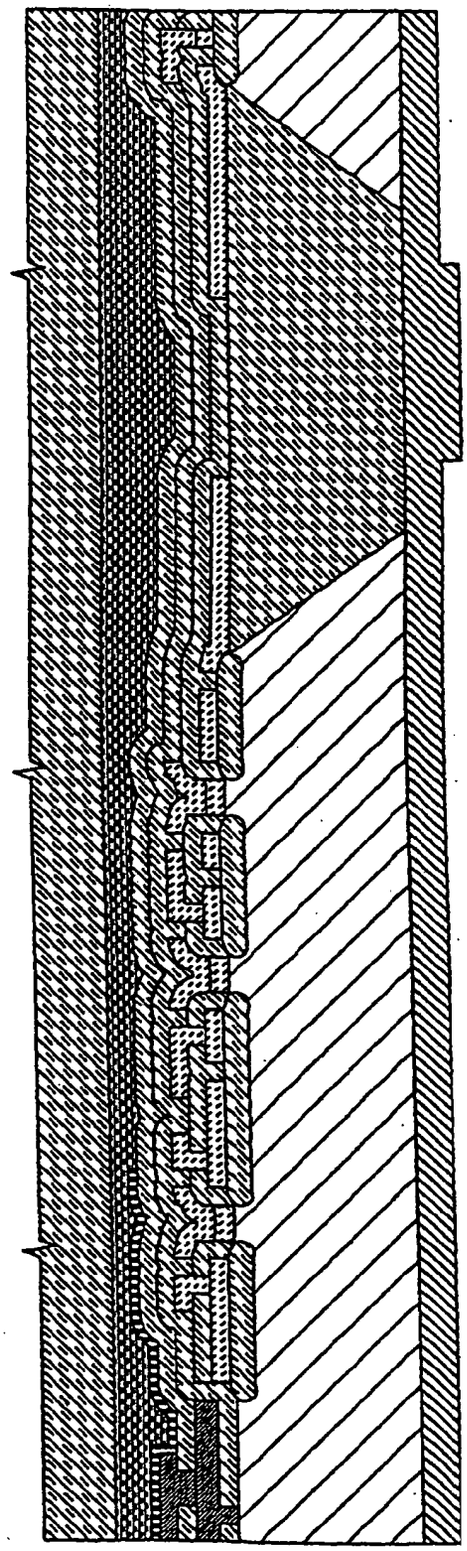

FIG. 222

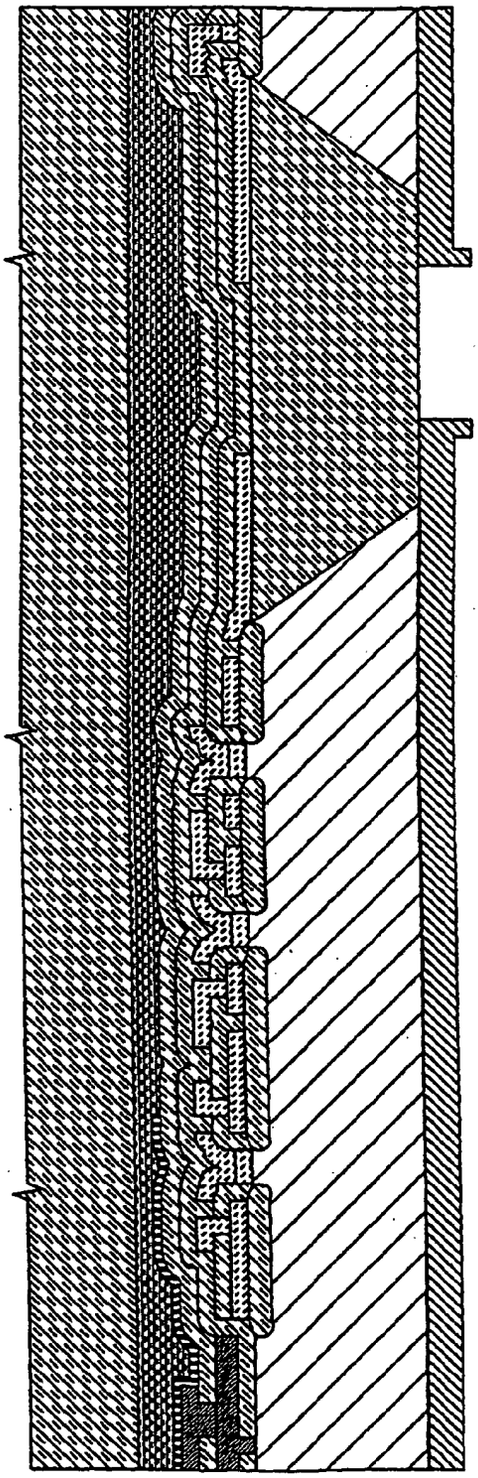

FIG. 223

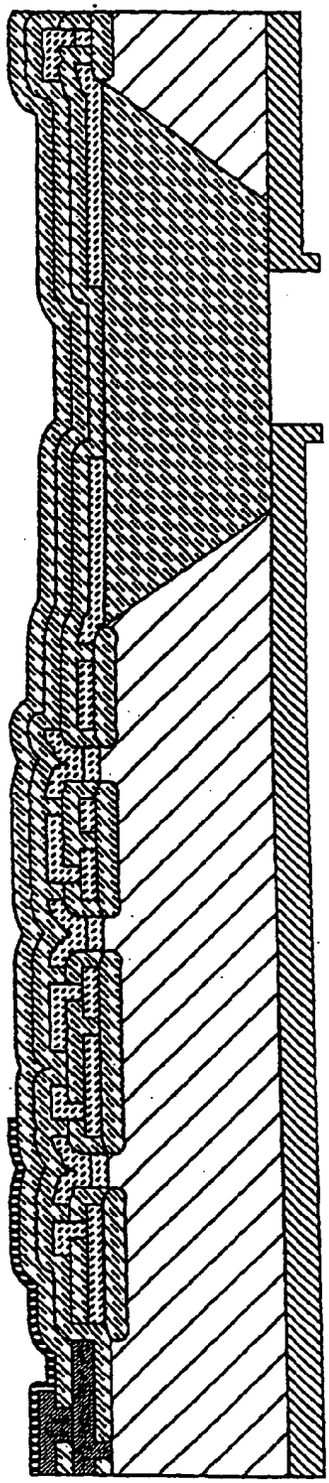

FIG. 224

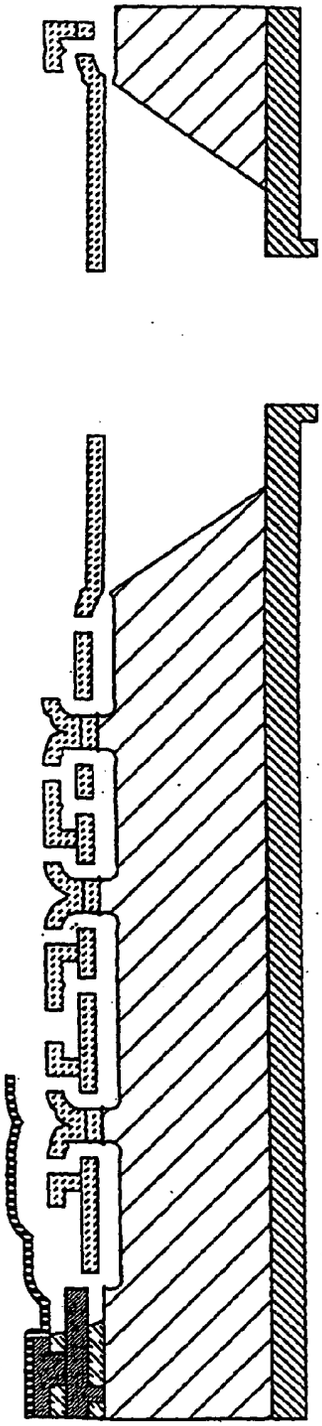

FIG. 225

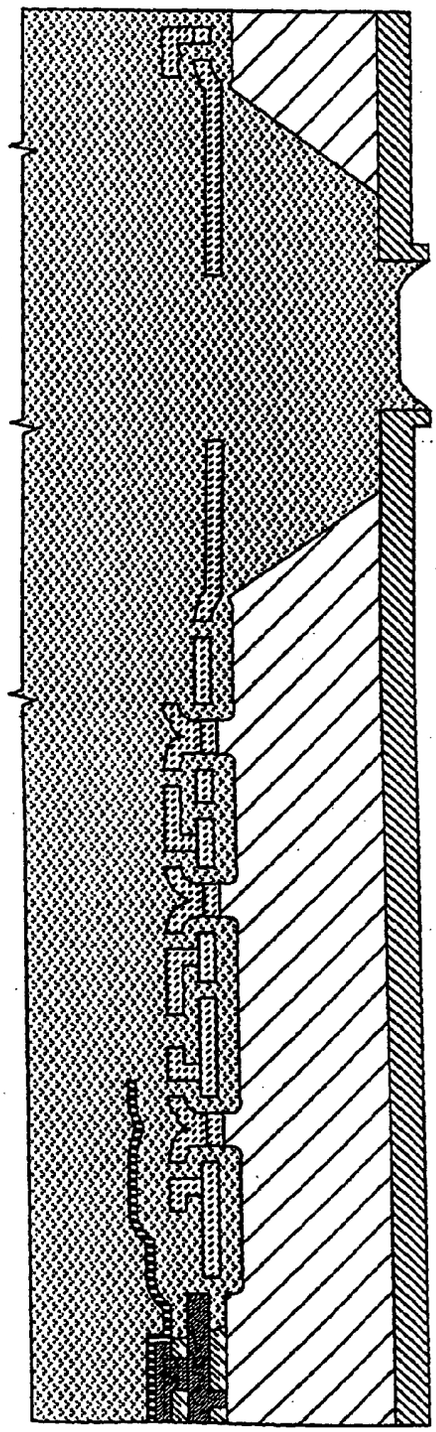

FIG. 226

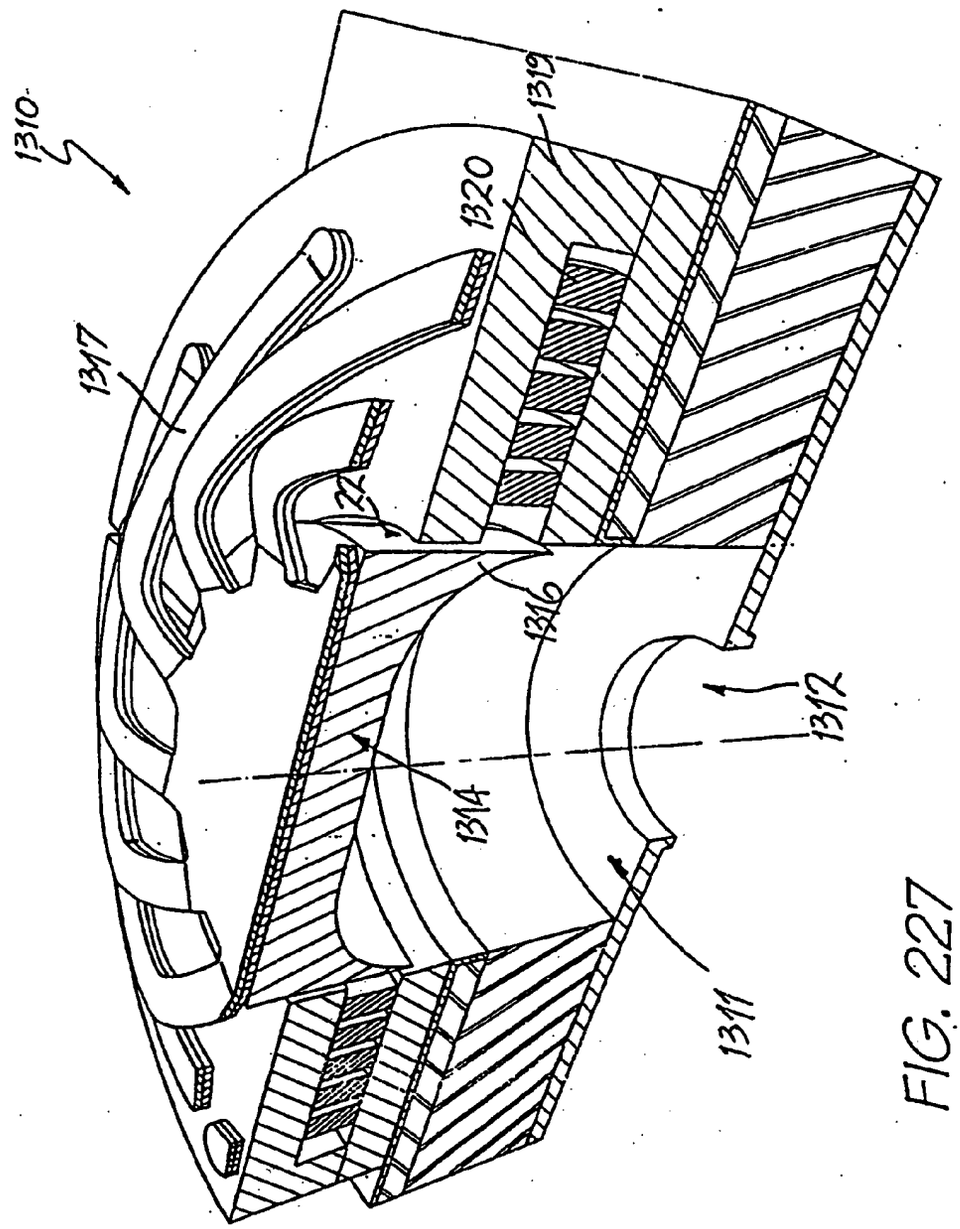

FIG. 227

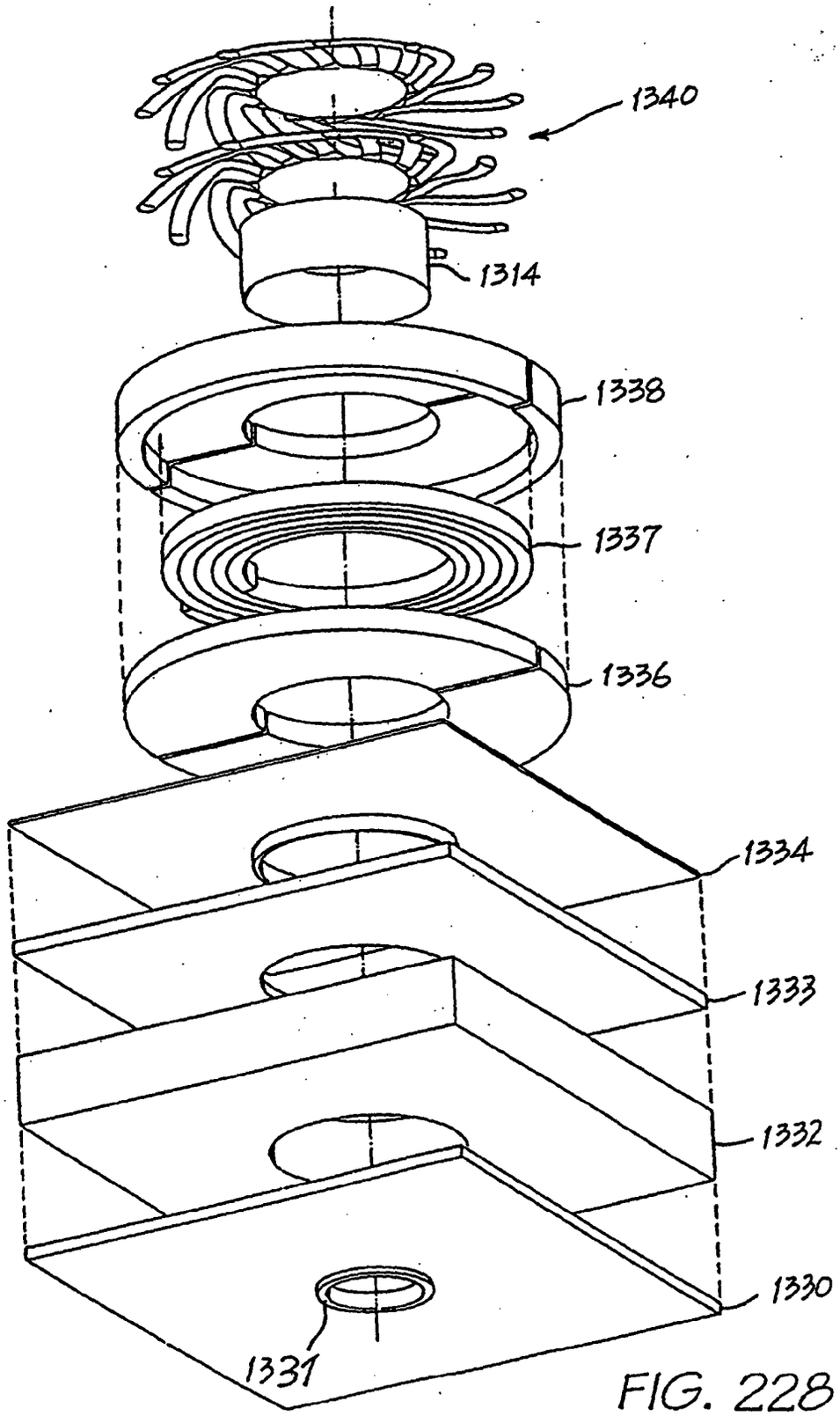

FIG. 228

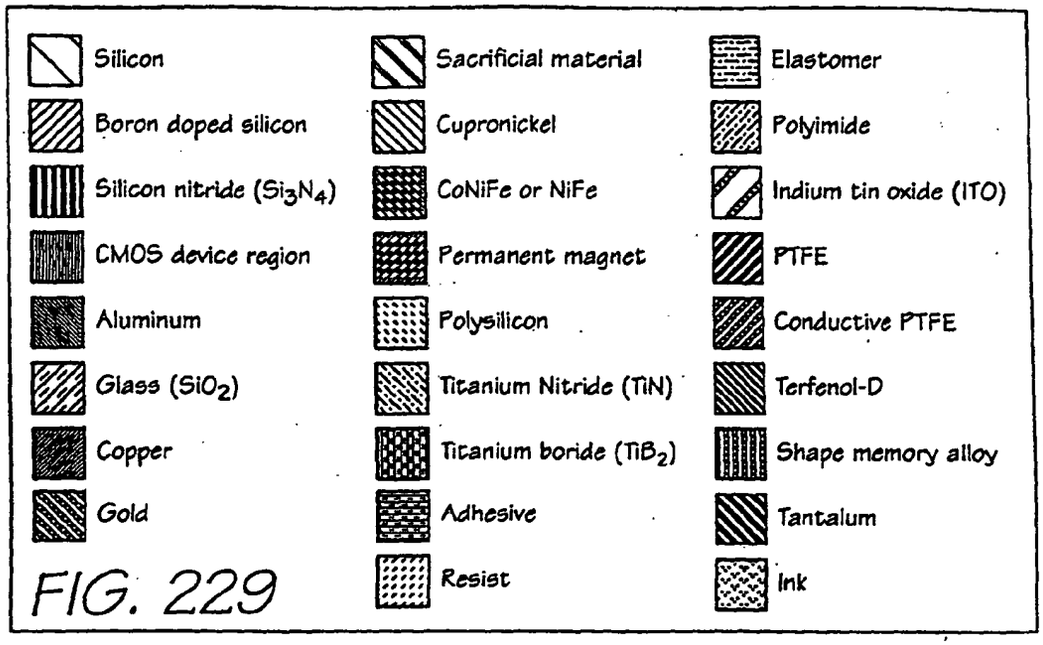

FIG. 229

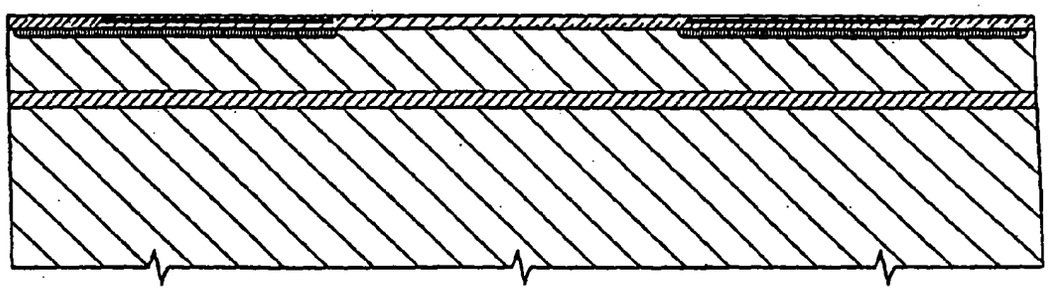

FIG. 230

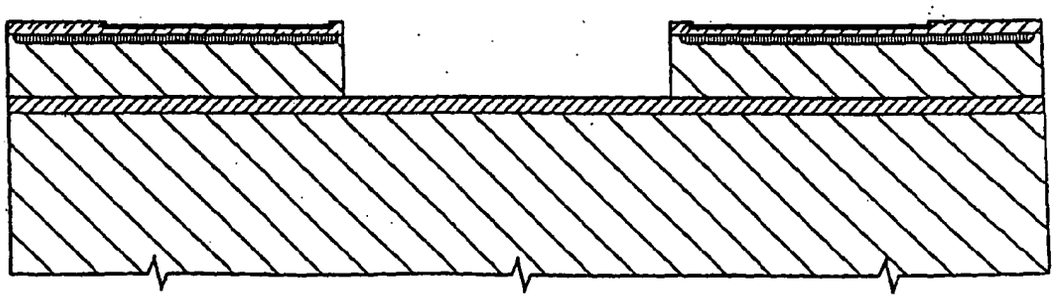

FIG. 231

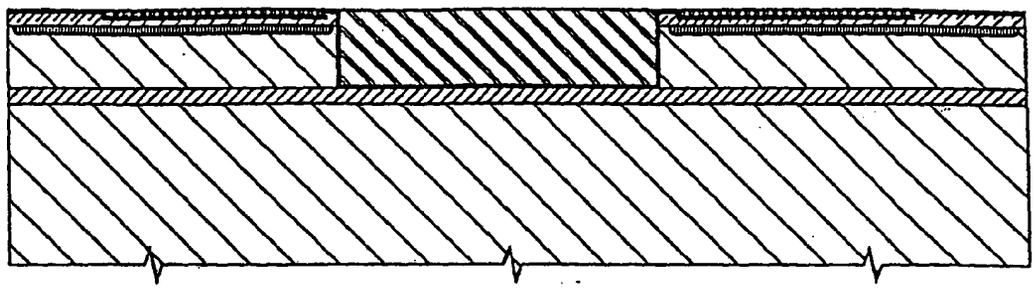

FIG. 232

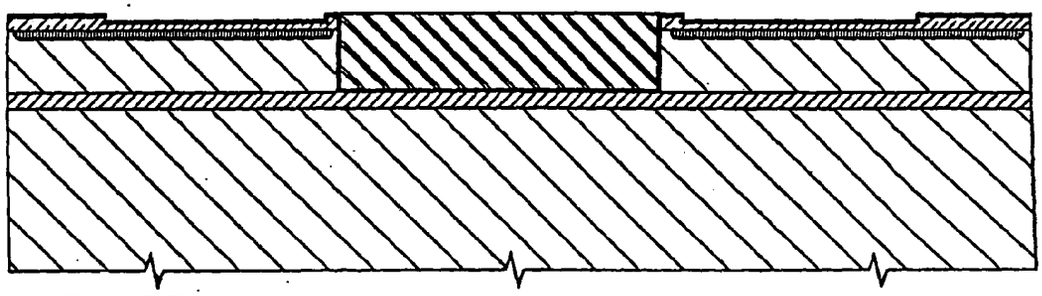

FIG. 233

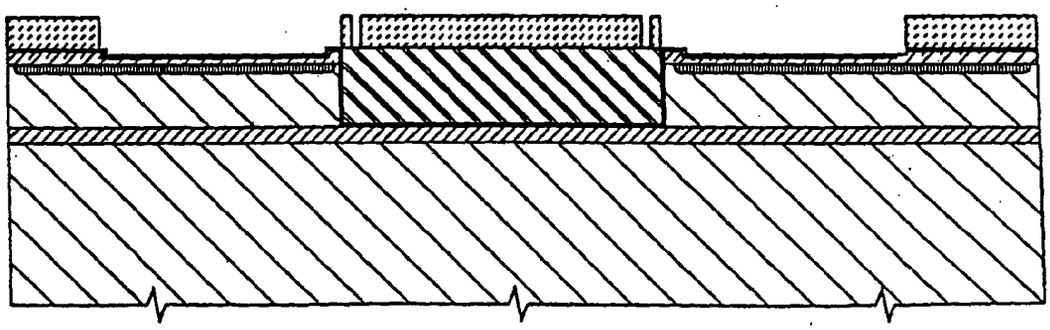

FIG. 234

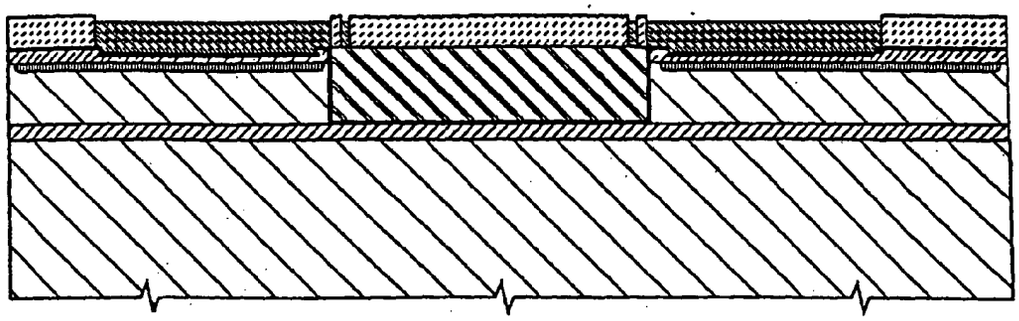

FIG. 235

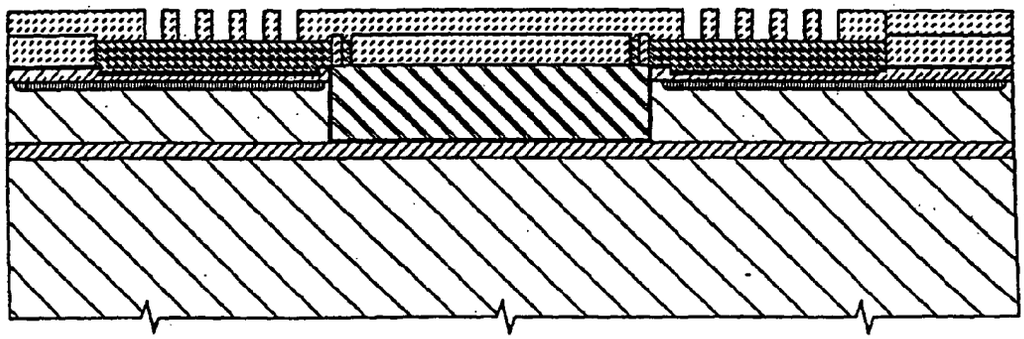

FIG. 236

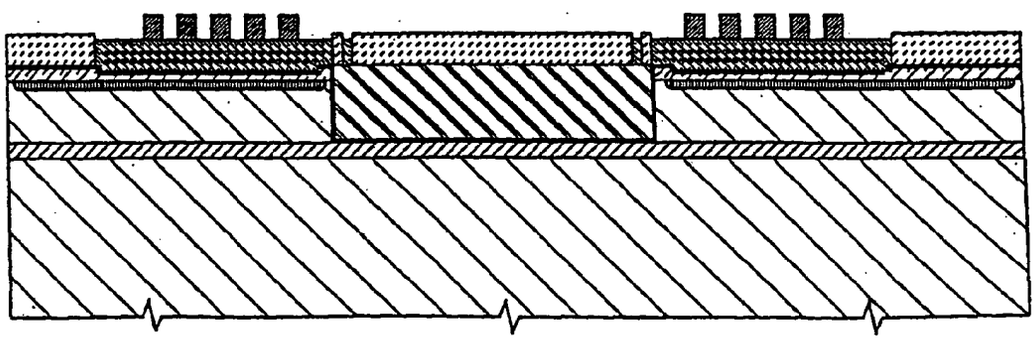

FIG. 237

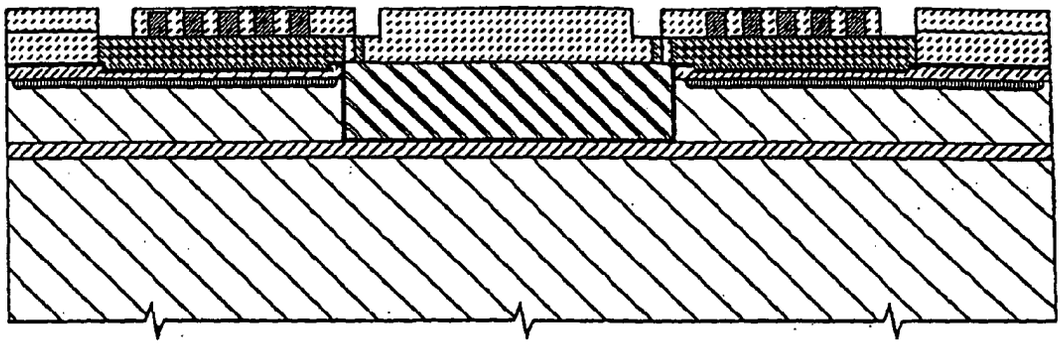

FIG. 238

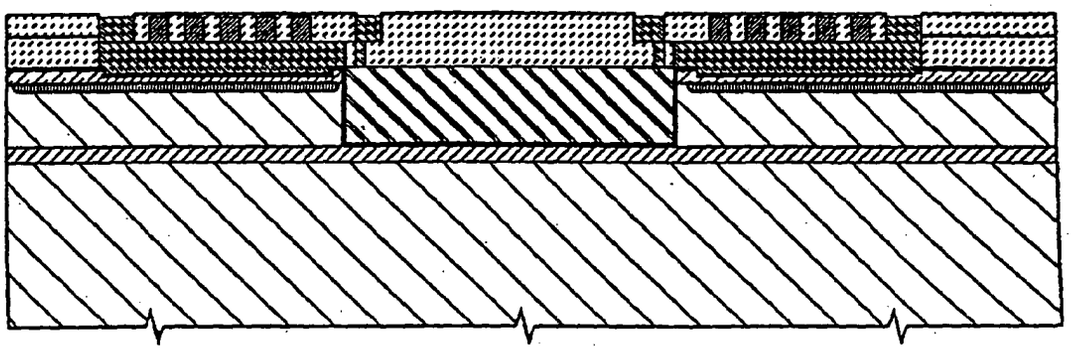

FIG. 239

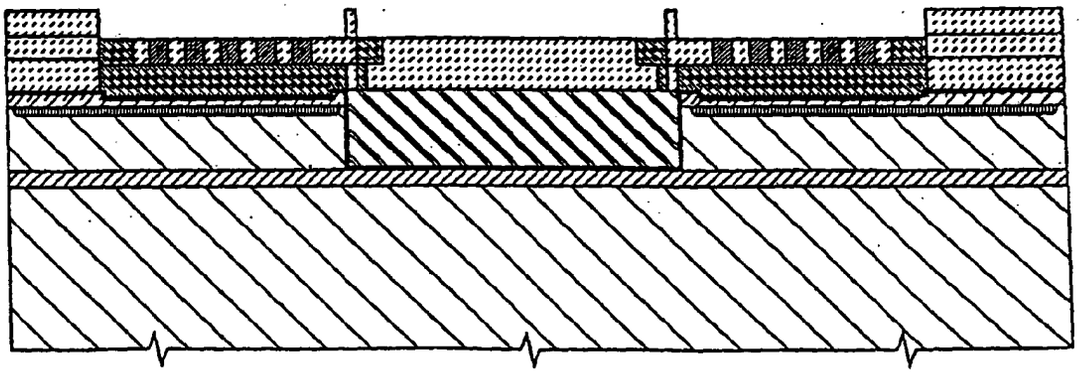

FIG. 240

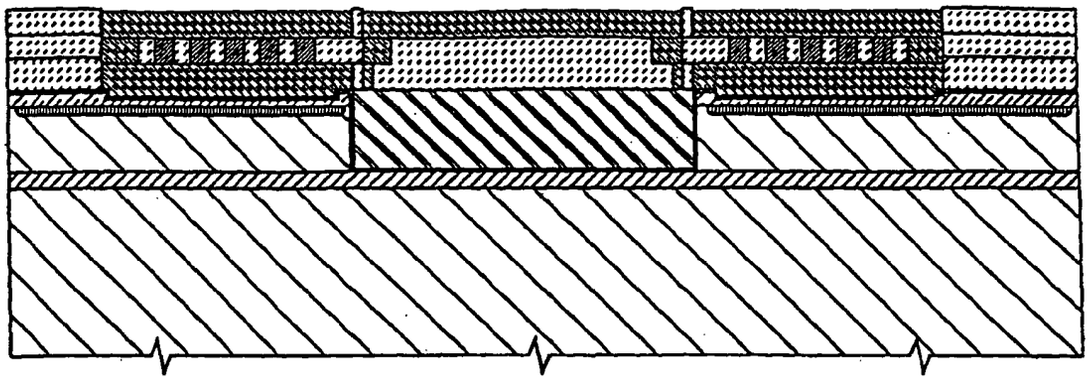

FIG. 241

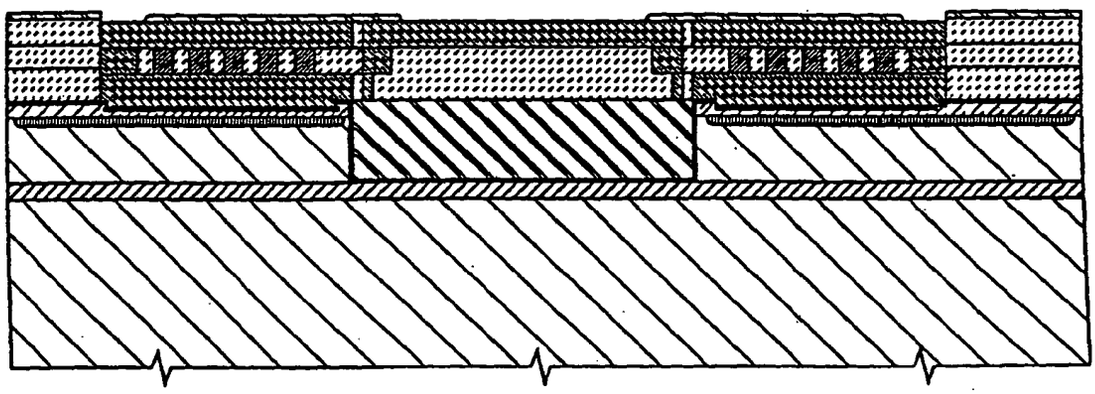

FIG. 242

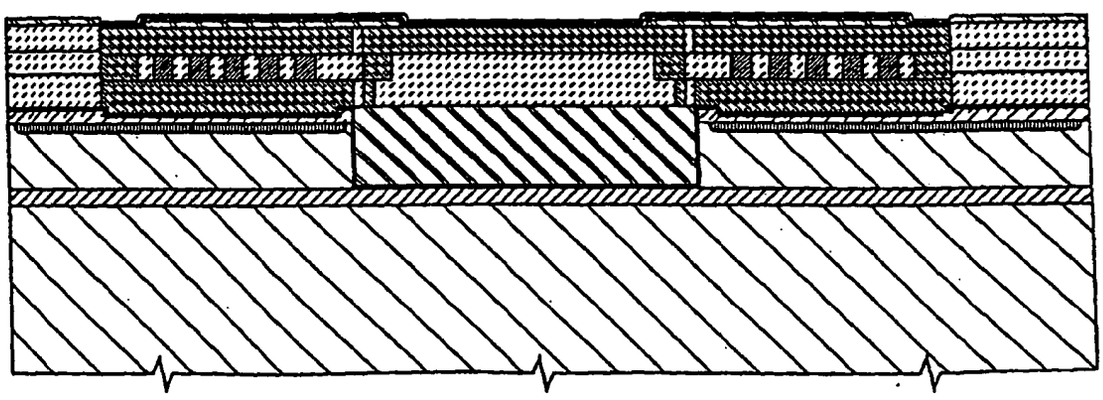

FIG. 243

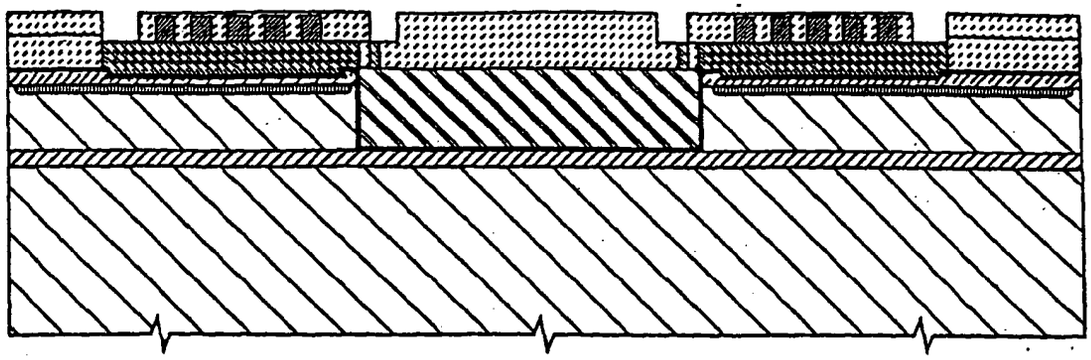

FIG. 238

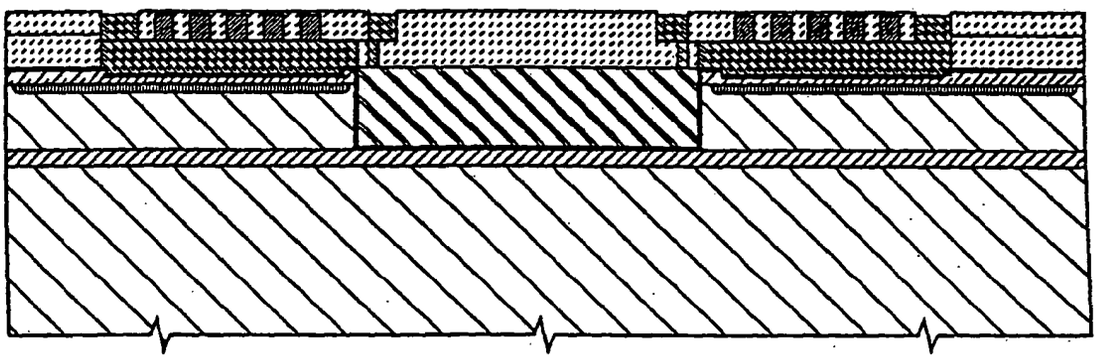

FIG. 239

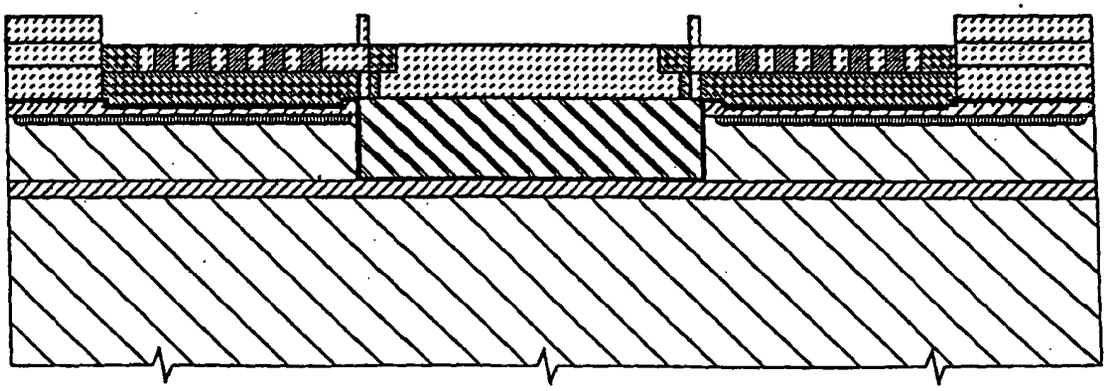

FIG. 240

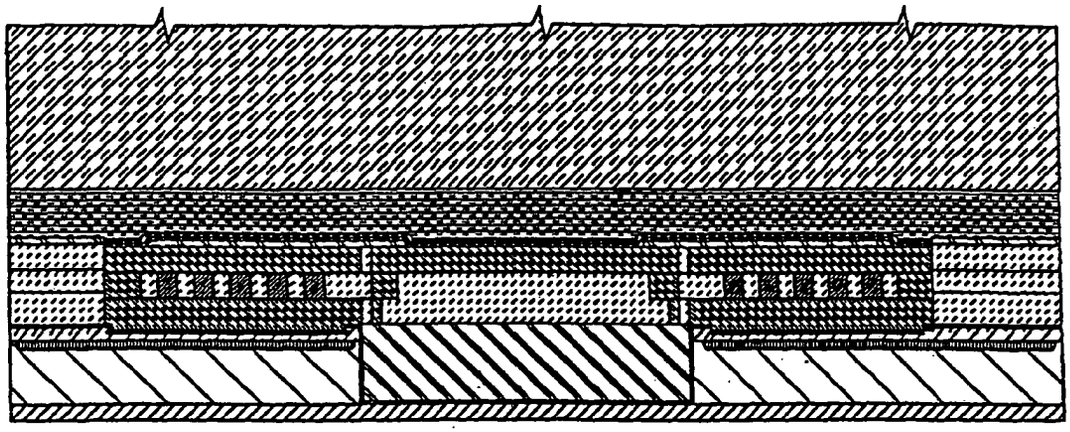

FIG. 244

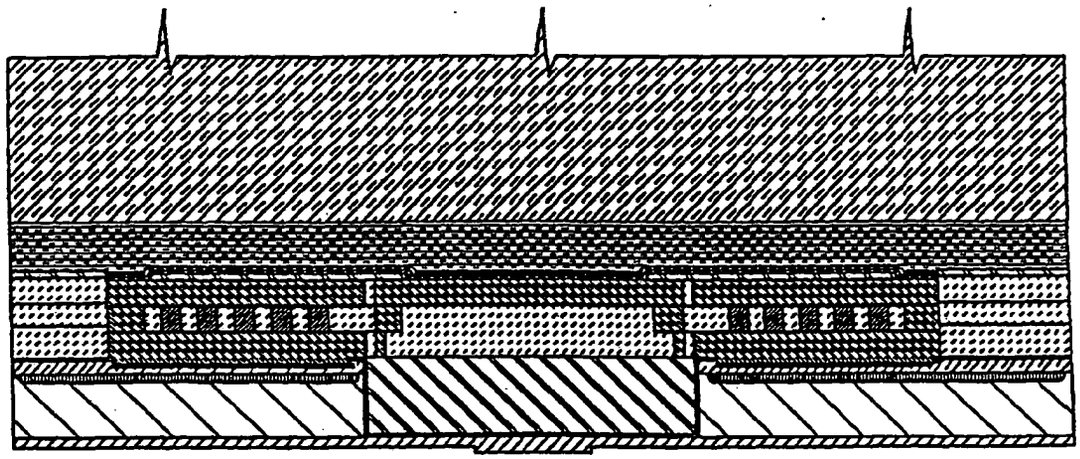

FIG. 245

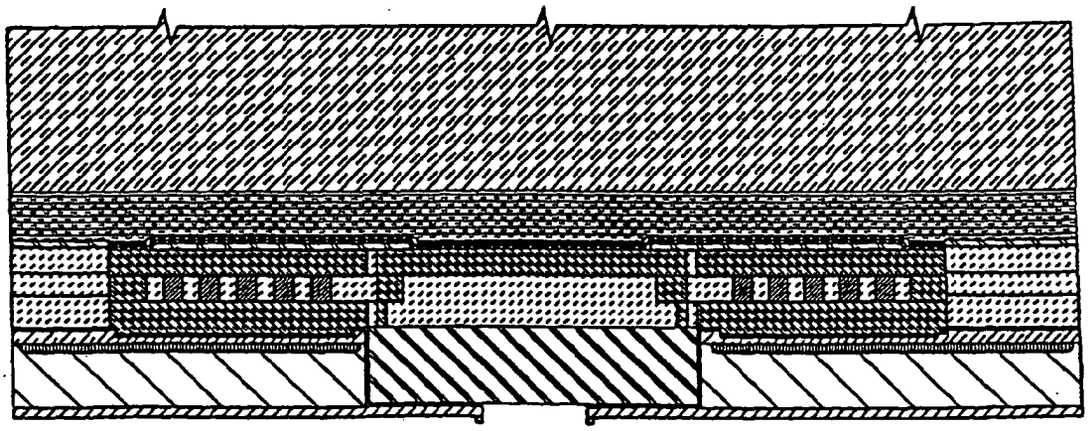

FIG. 246

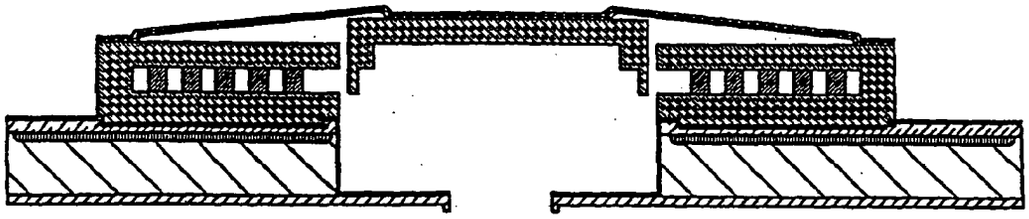

FIG. 247

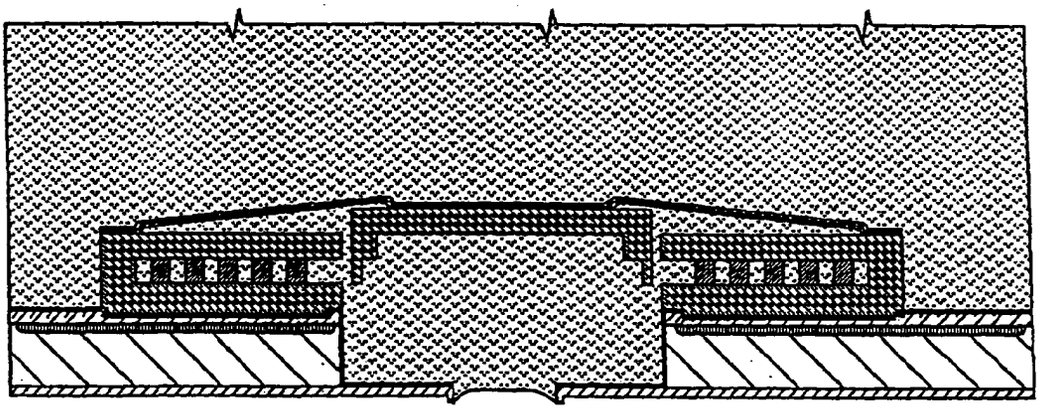

FIG. 248

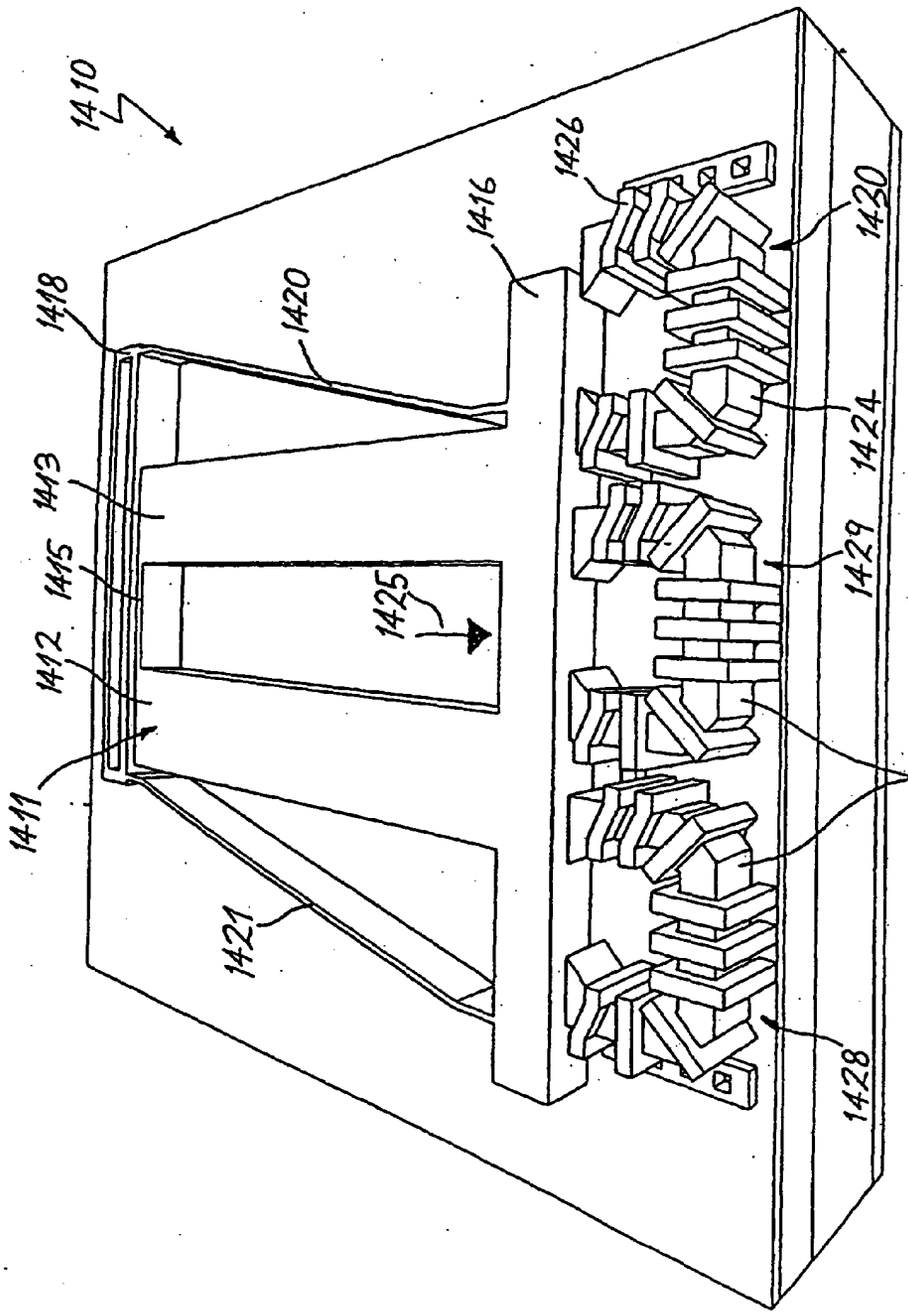
1410
1418
1413
1415
1412
1411
1421
1420
1416
1426
1425
1430
1424
1429
1424
1428

FIG. 249

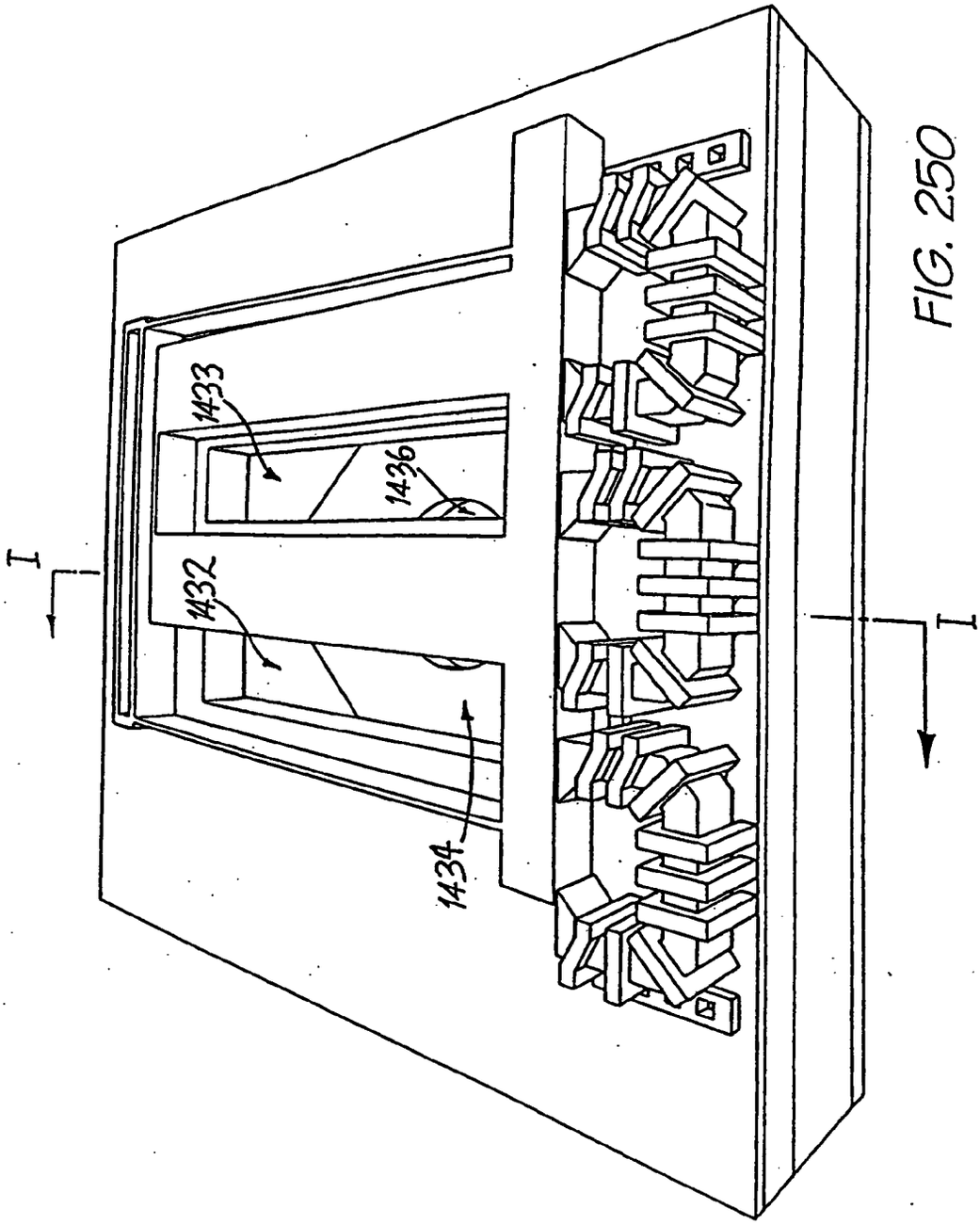

FIG. 250

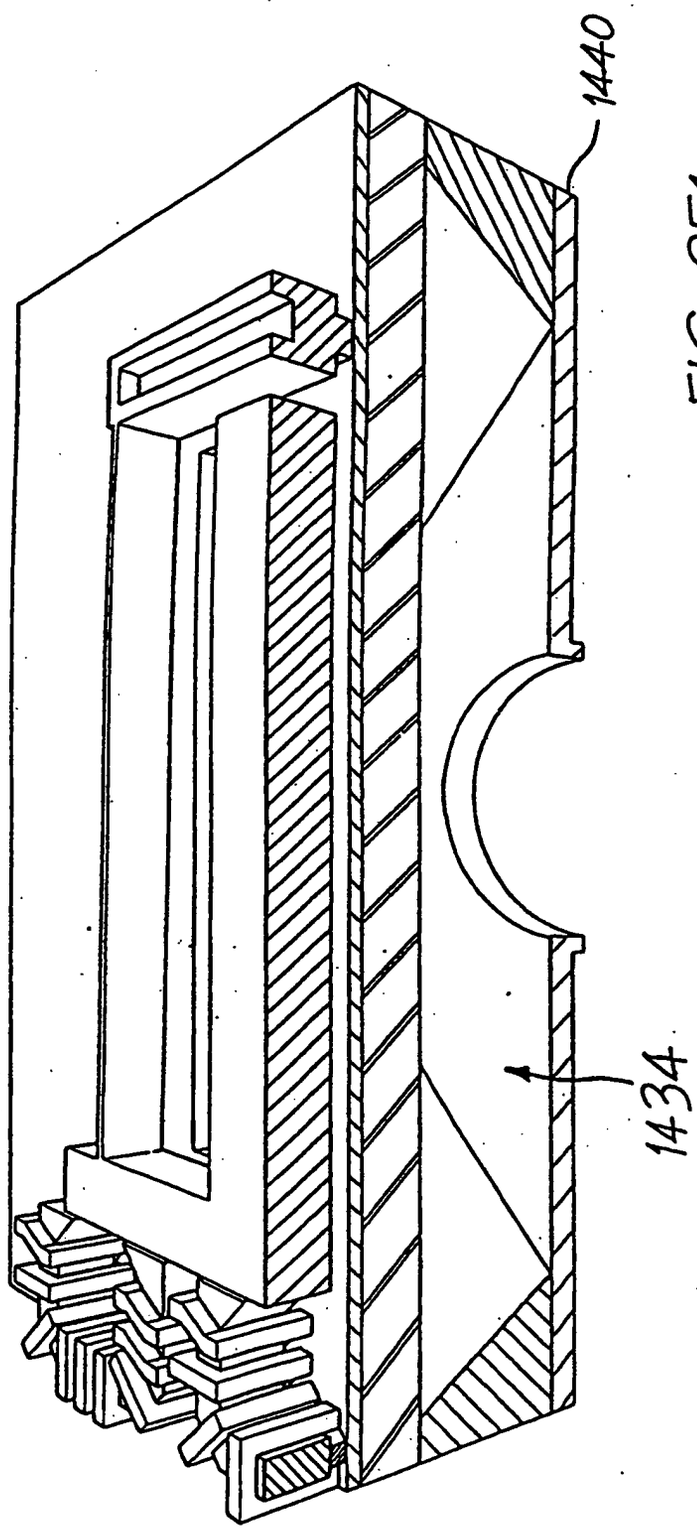

FIG. 251

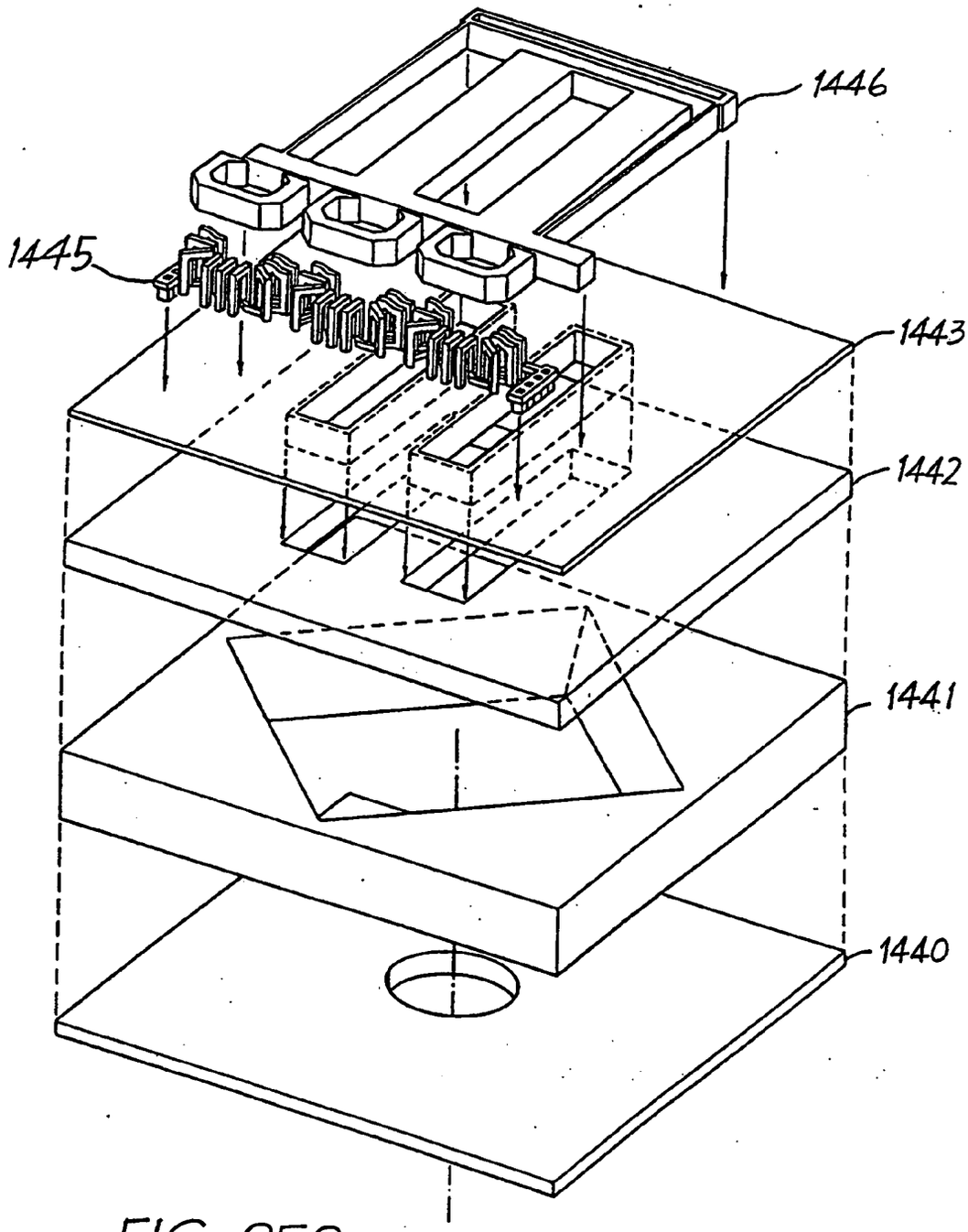

FIG. 252

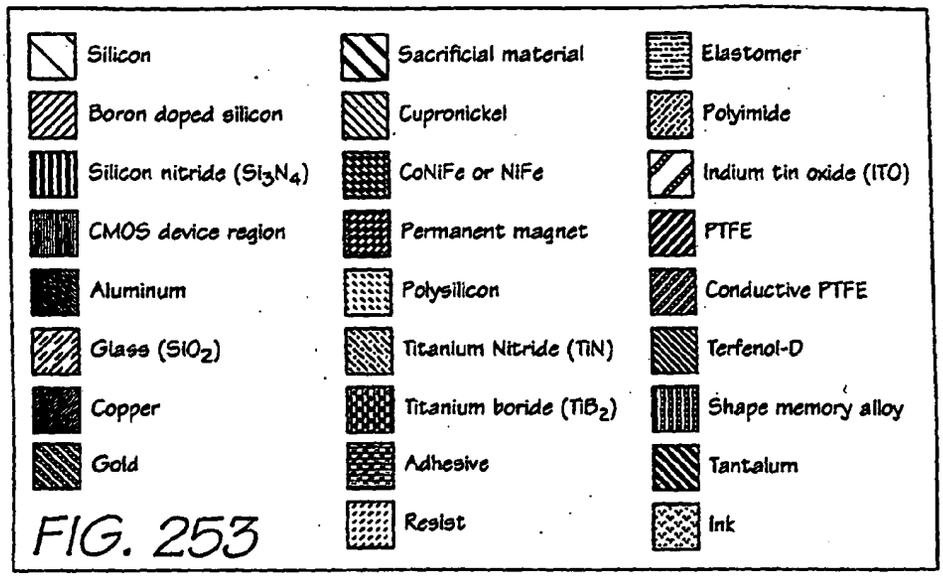

FIG. 253

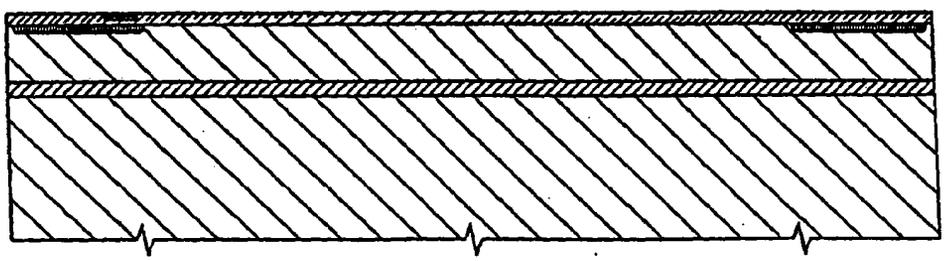

FIG. 254

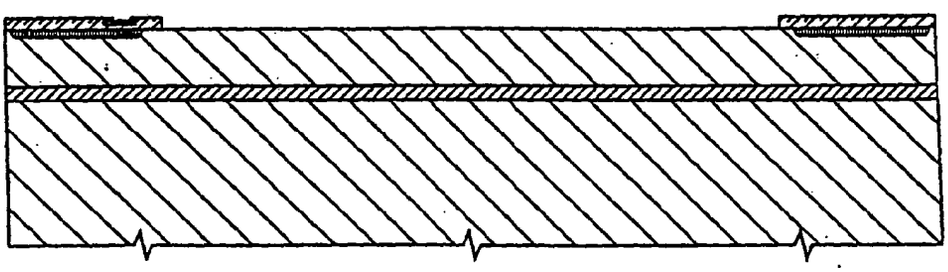

FIG. 255

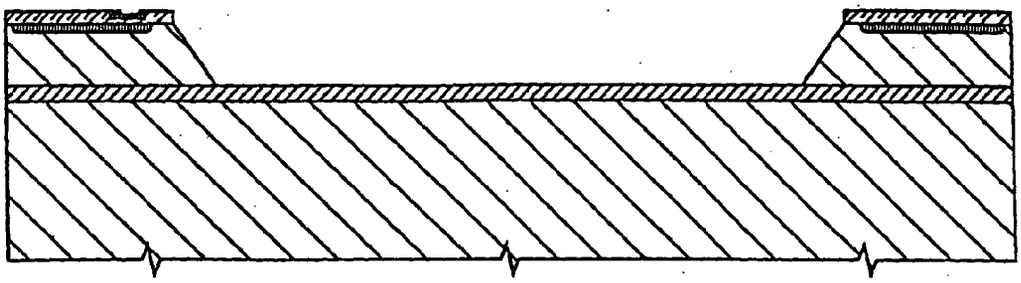

FIG. 256

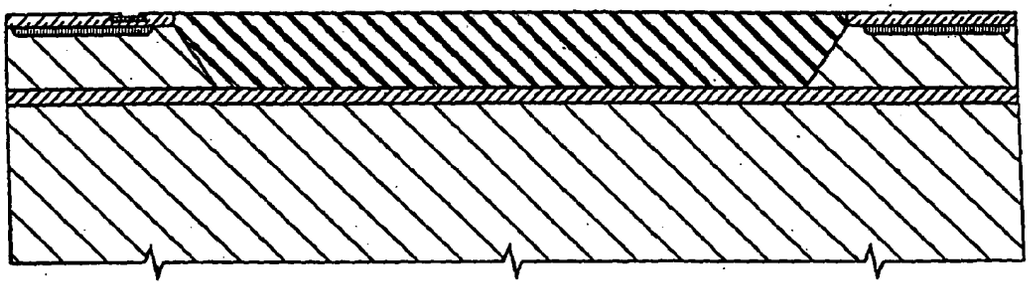

FIG. 257

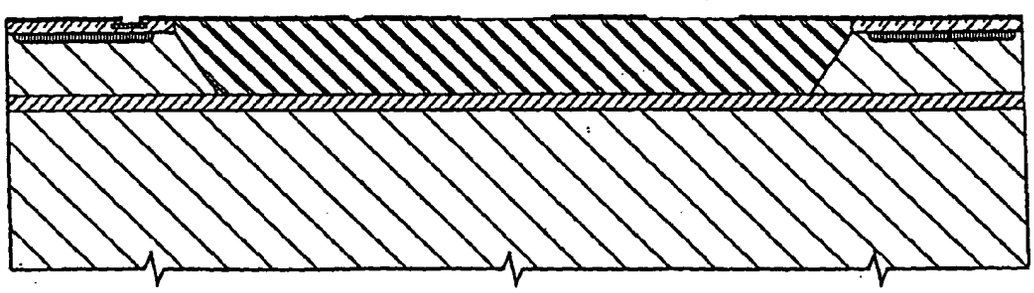

FIG. 258

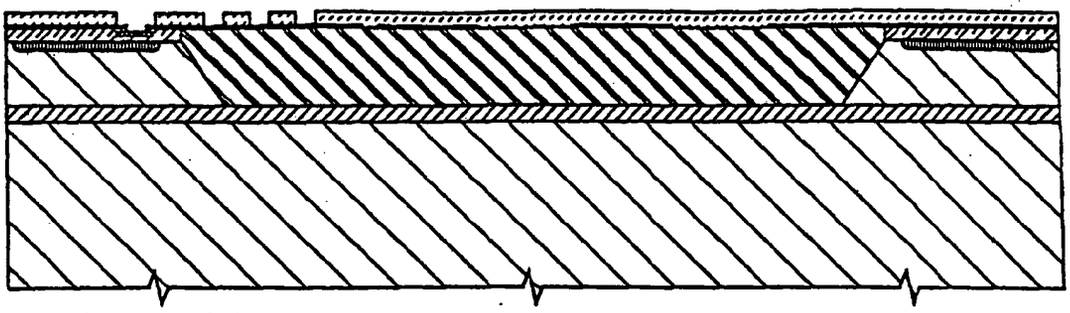

FIG. 259

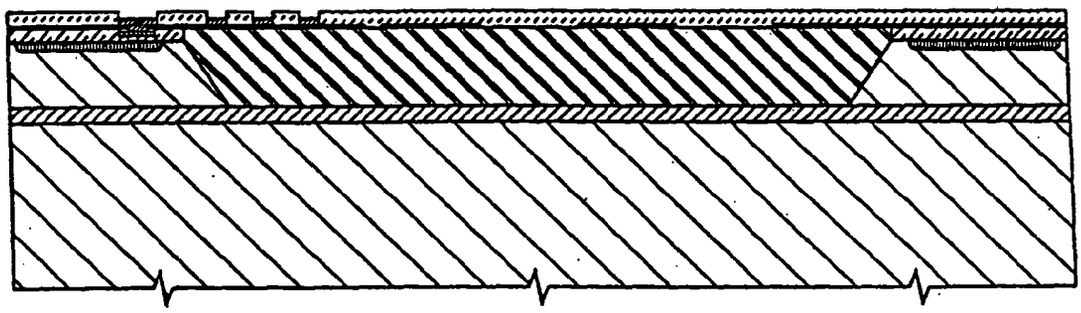

FIG. 260

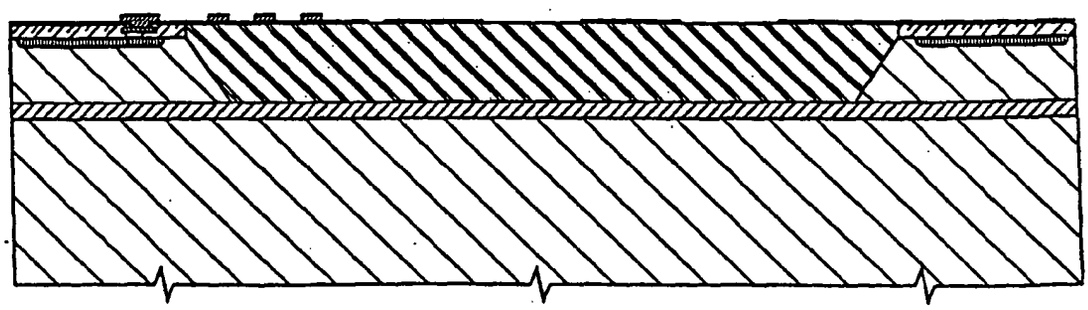

FIG. 261

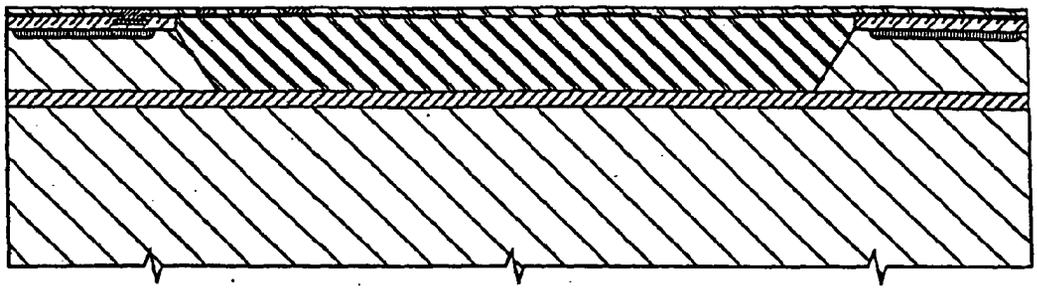

FIG. 262

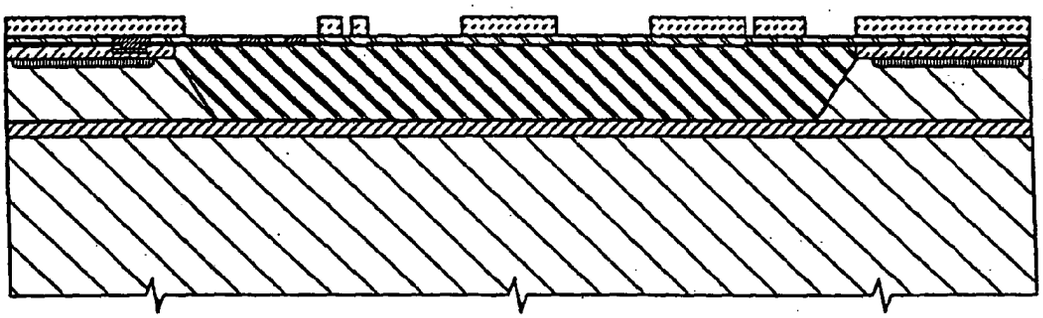

FIG. 263

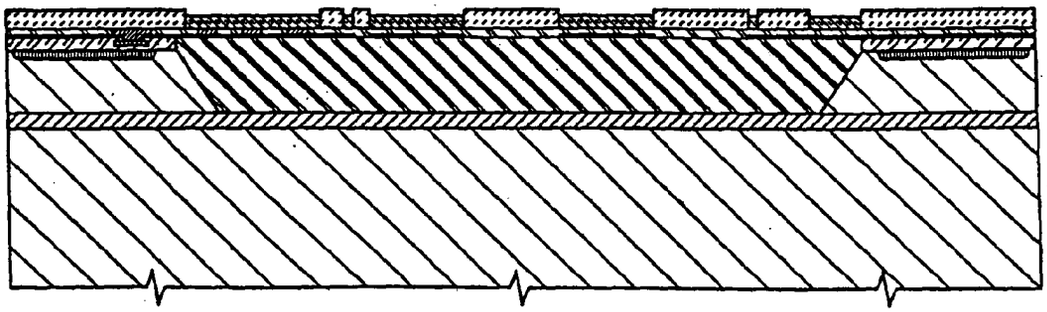

FIG. 264

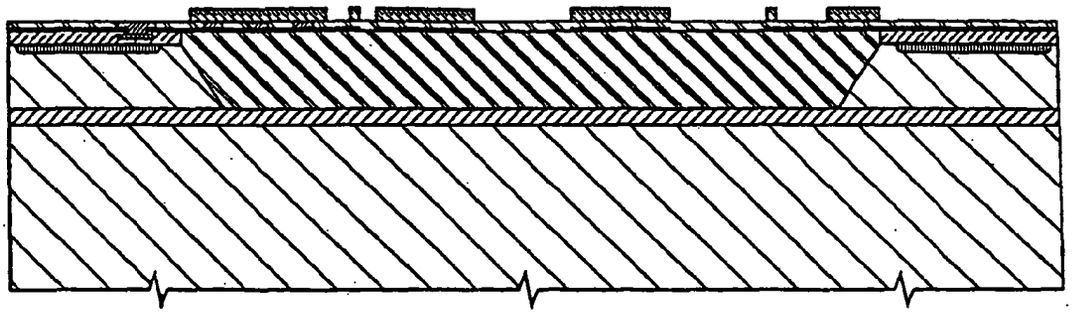

FIG. 265

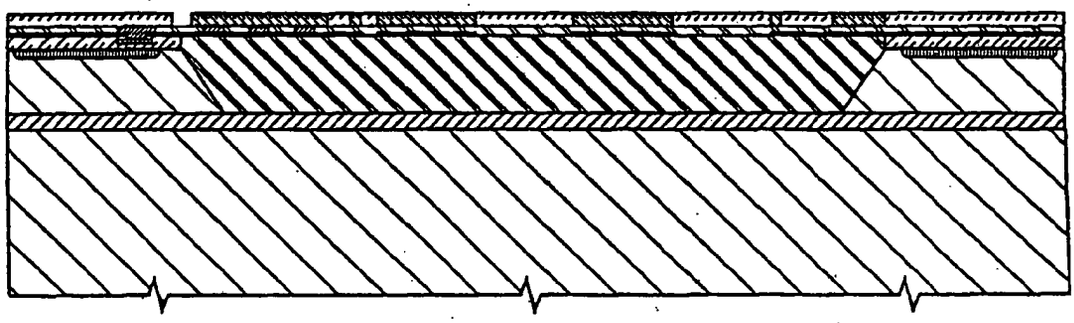

FIG. 266

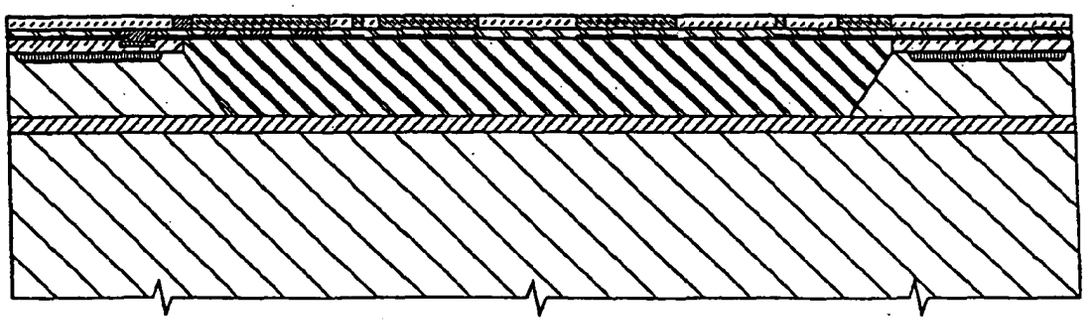

FIG. 267

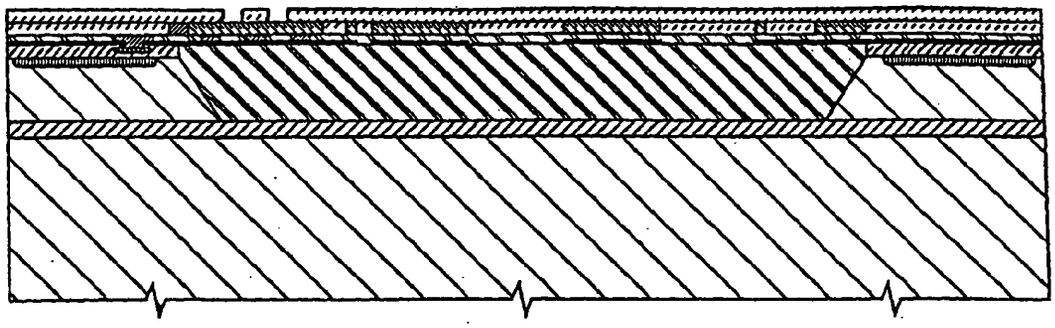

FIG. 268

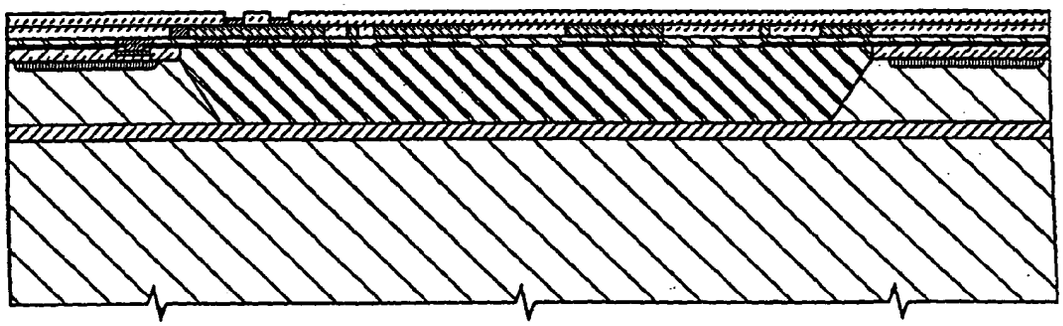

FIG. 269

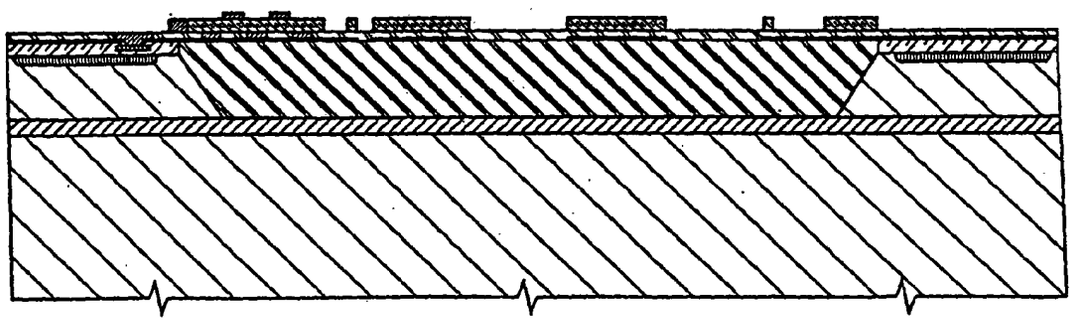

FIG. 270

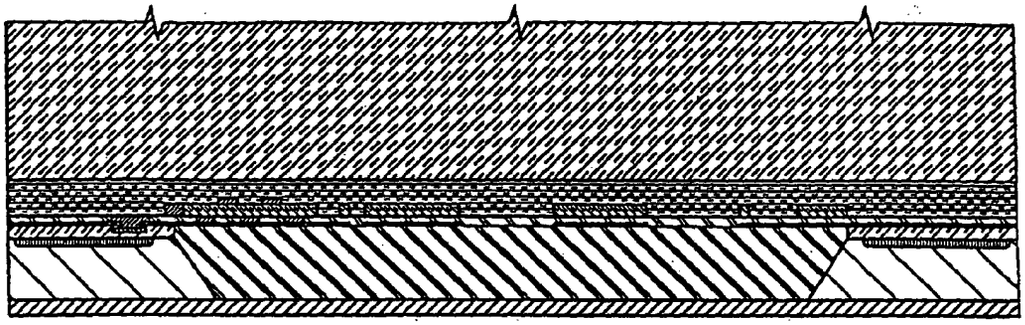

FIG. 271

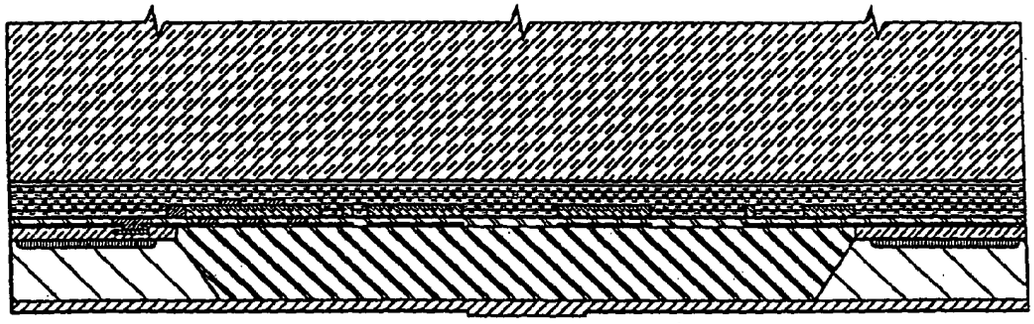

FIG. 272

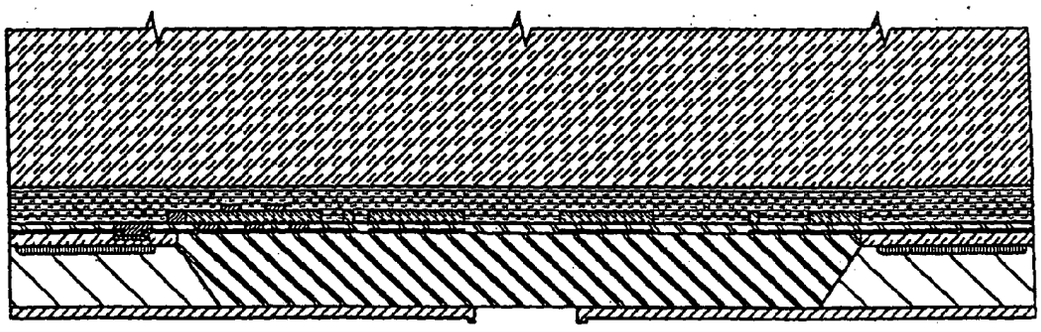

FIG. 273

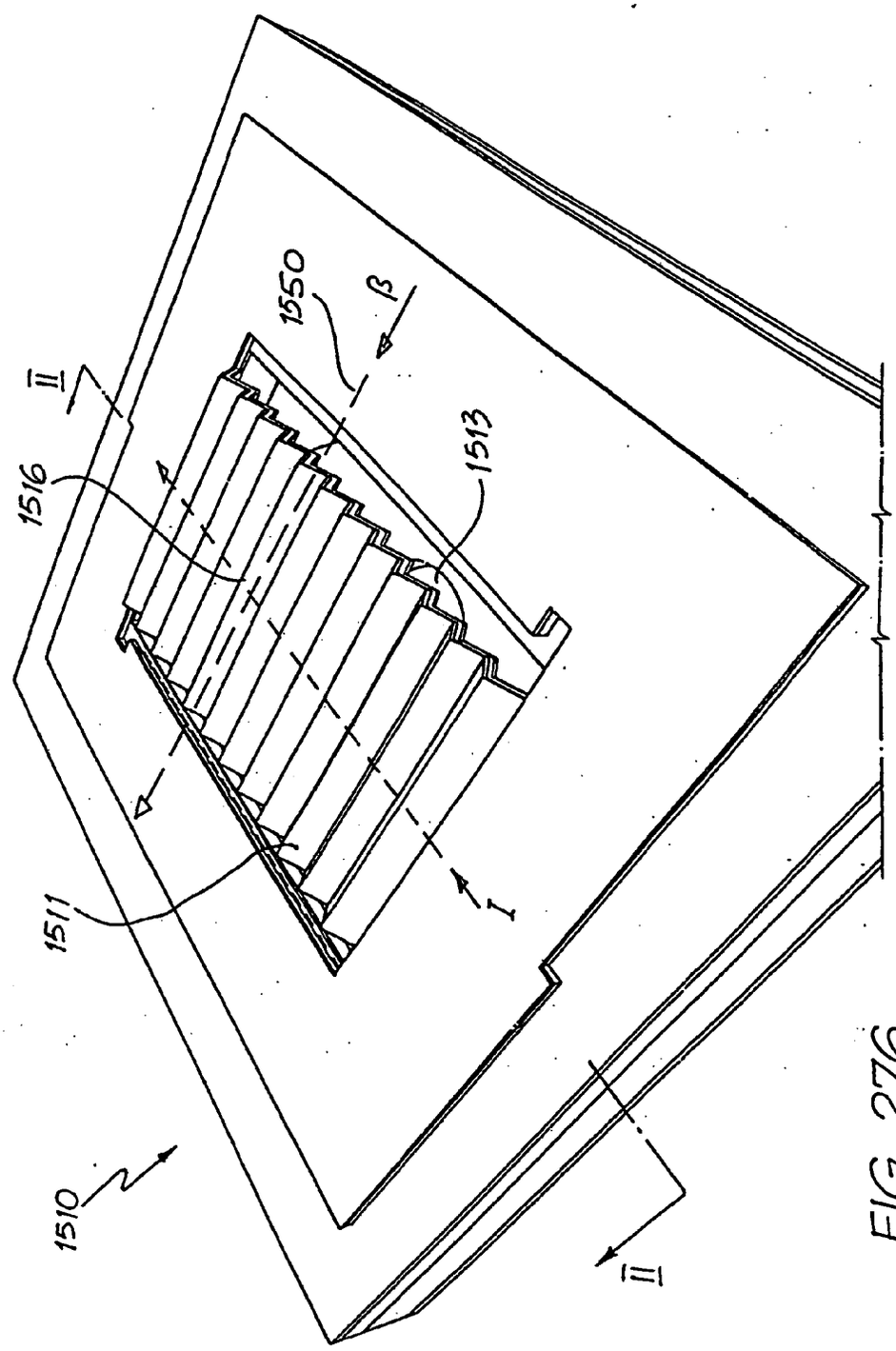

FIG. 276

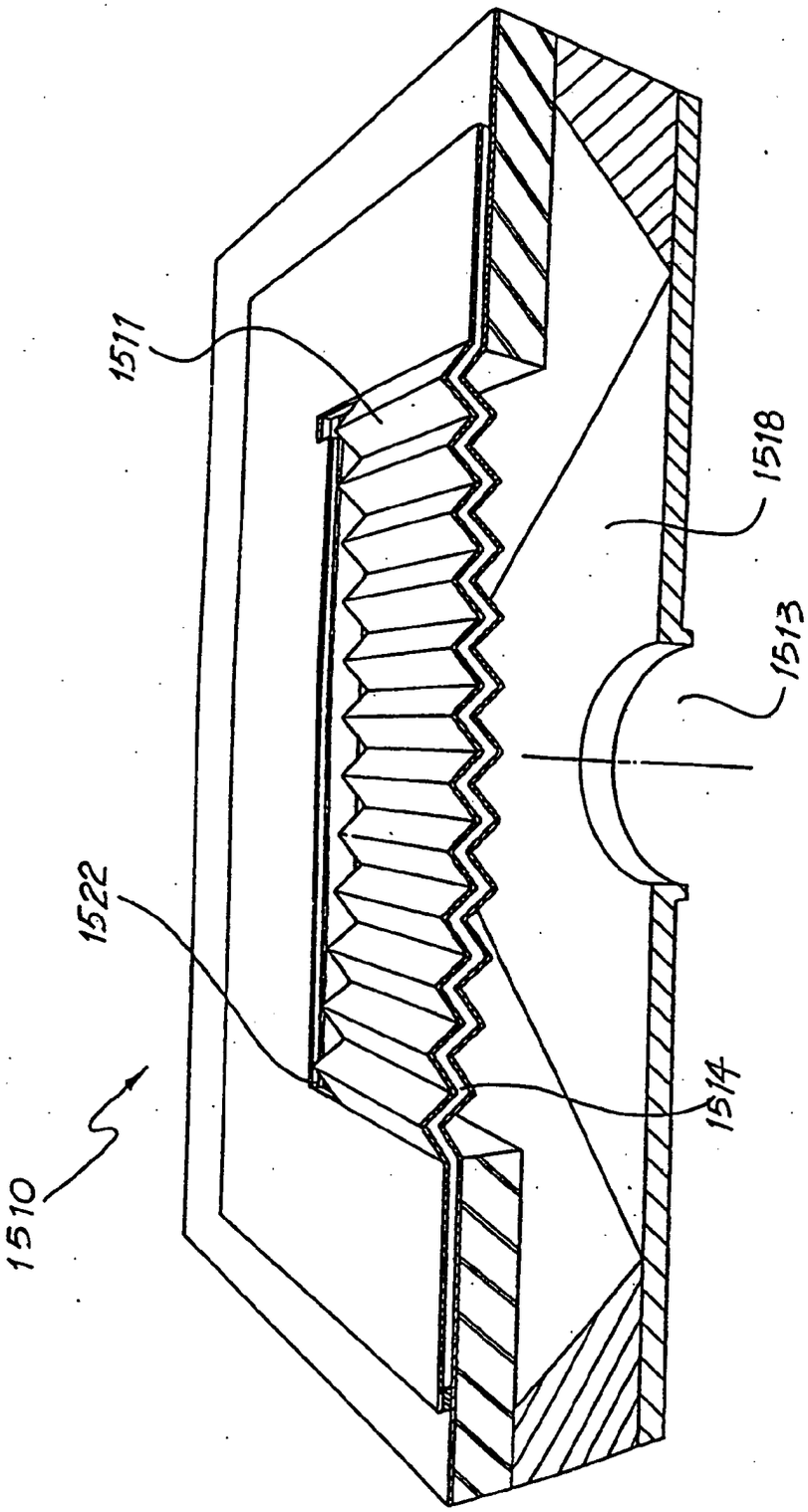

FIG. 277

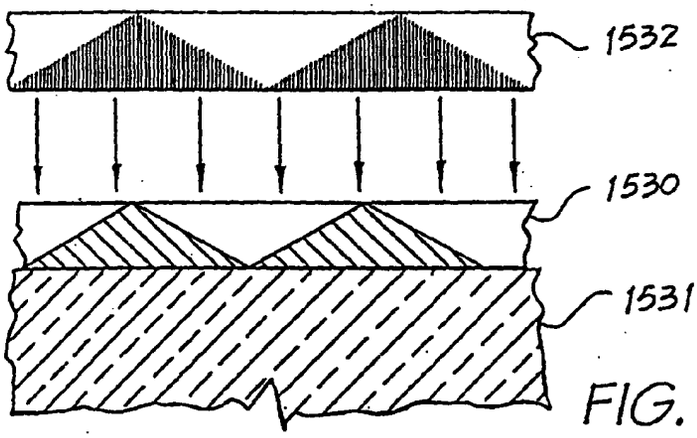

FIG. 278

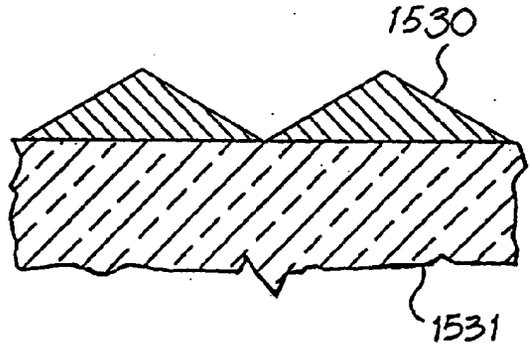

FIG. 279

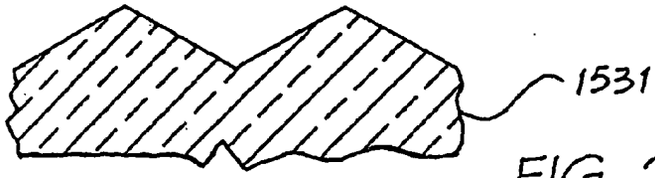

FIG. 280

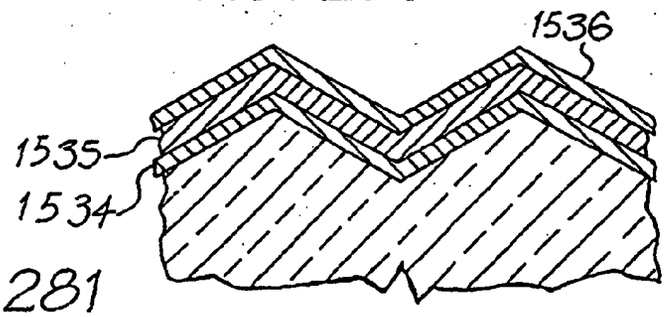

FIG. 281

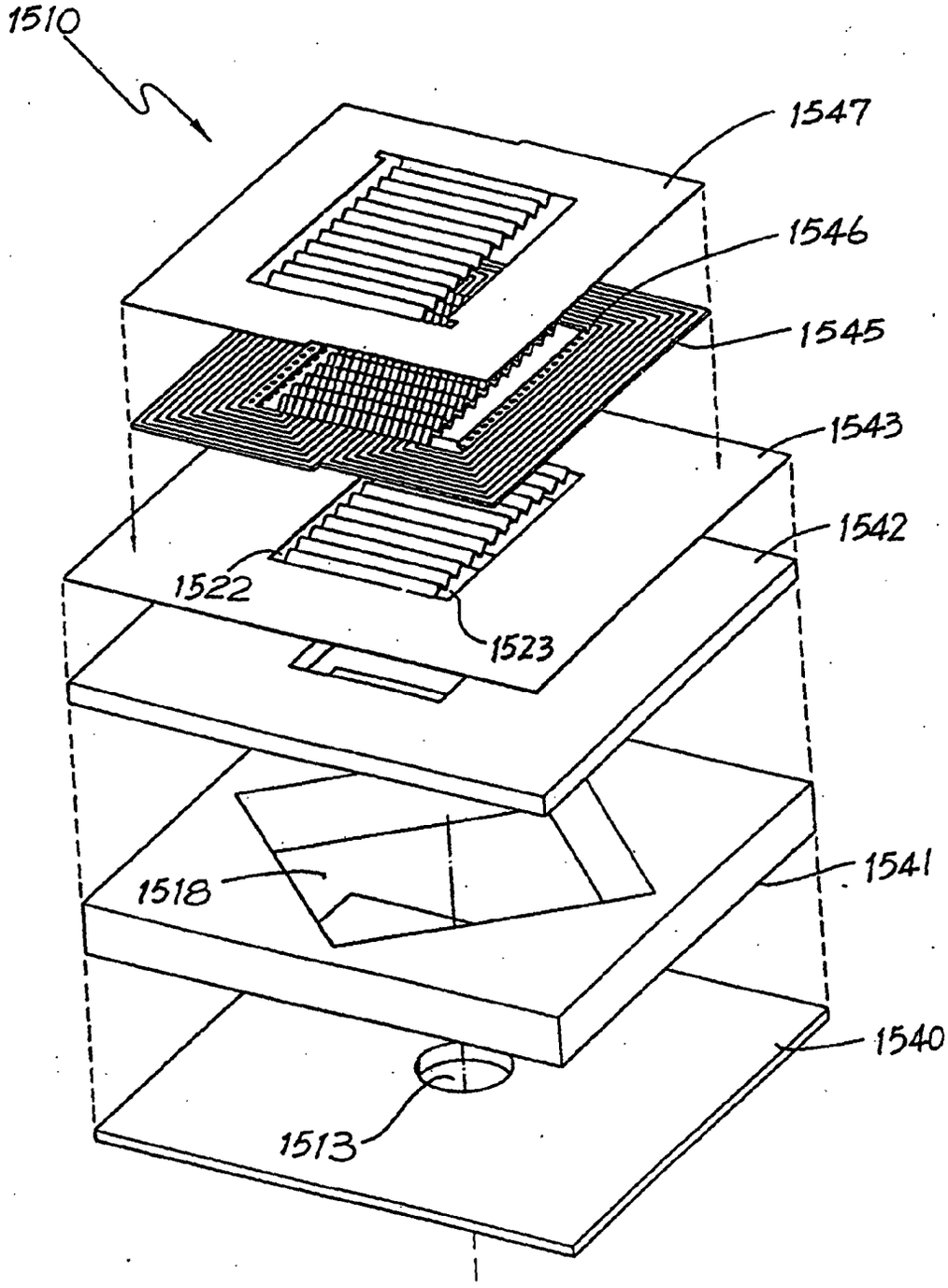

FIG. 282

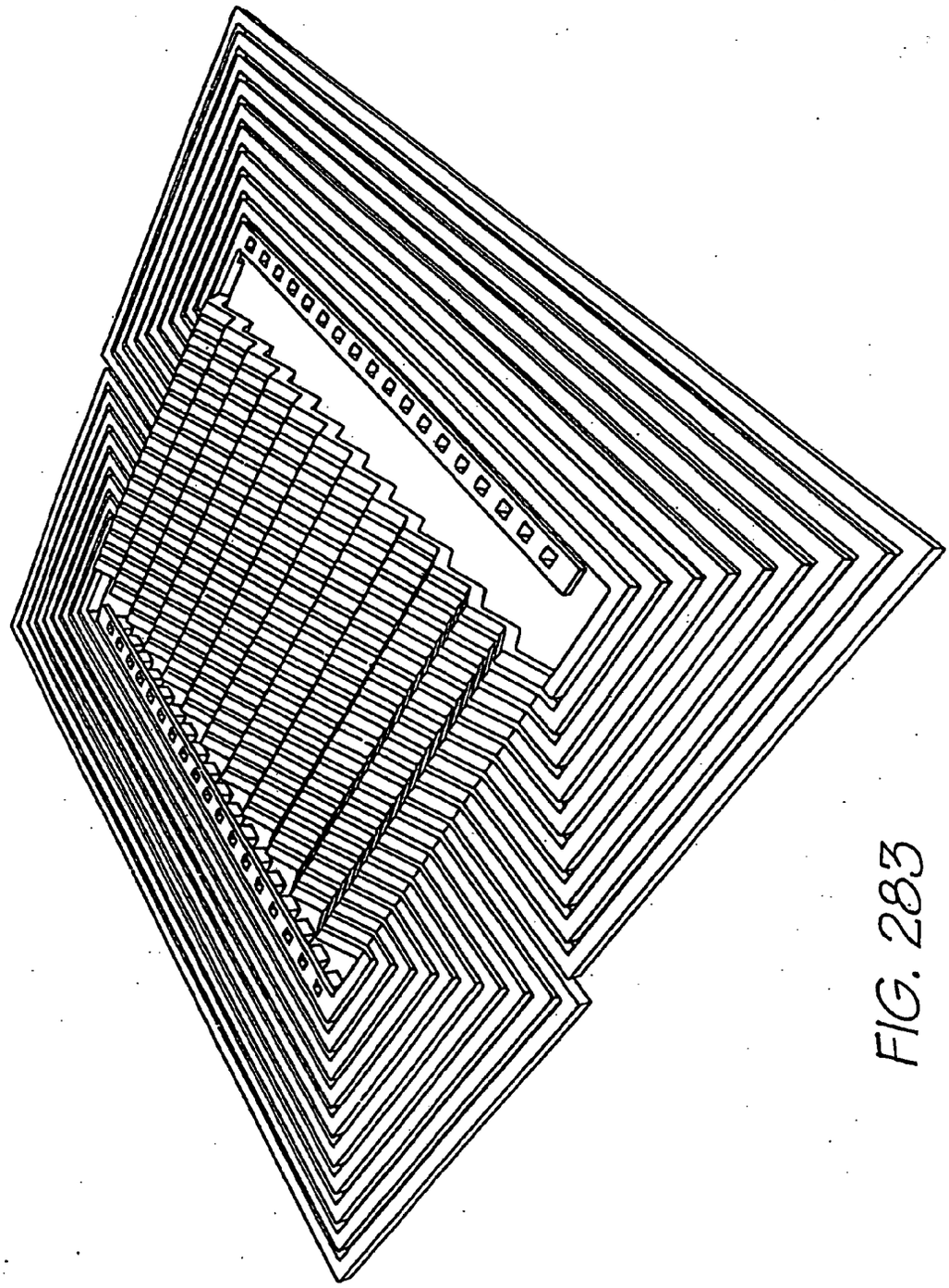

FIG. 283

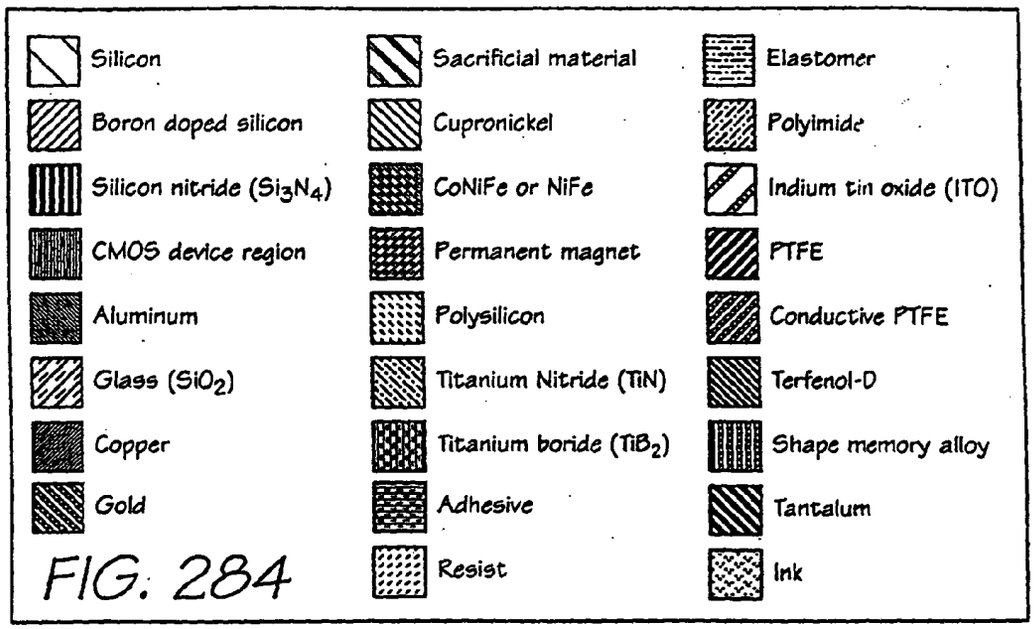

FIG. 284

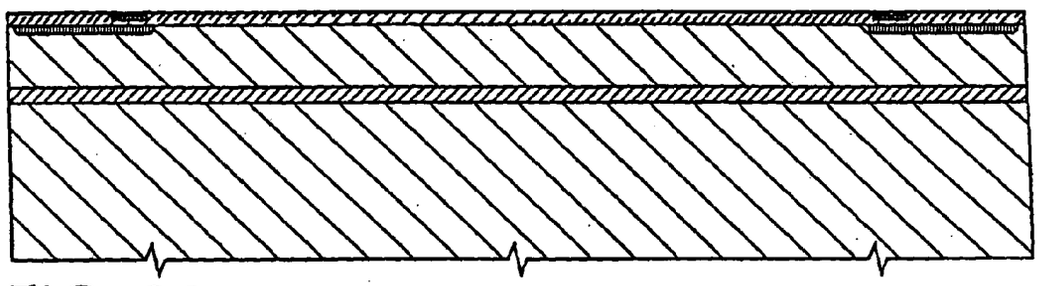

FIG. 285

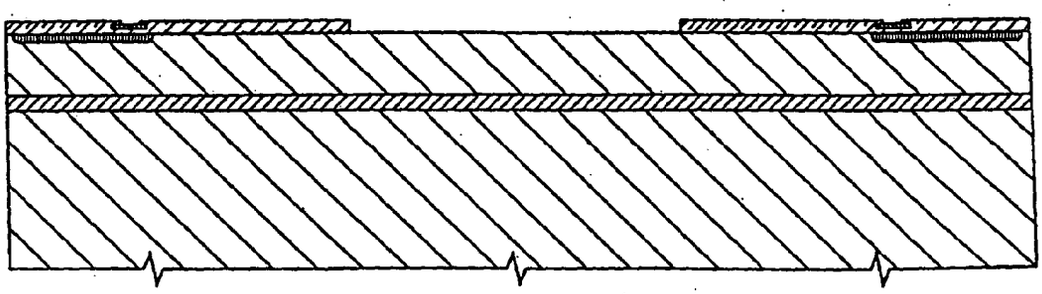

FIG. 286

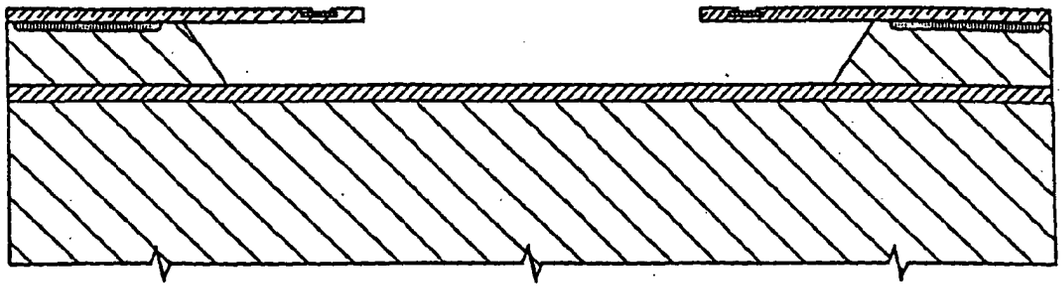

FIG. 287

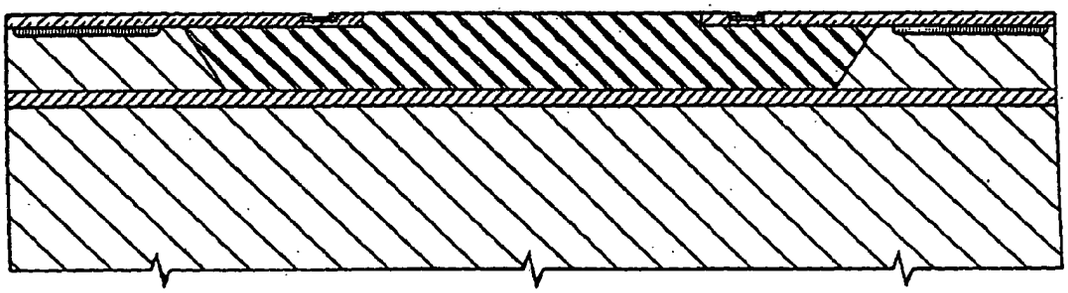

FIG. 288

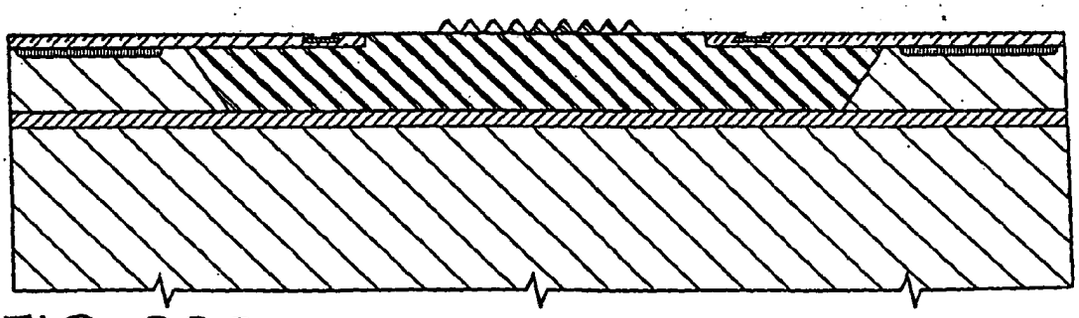

FIG. 289

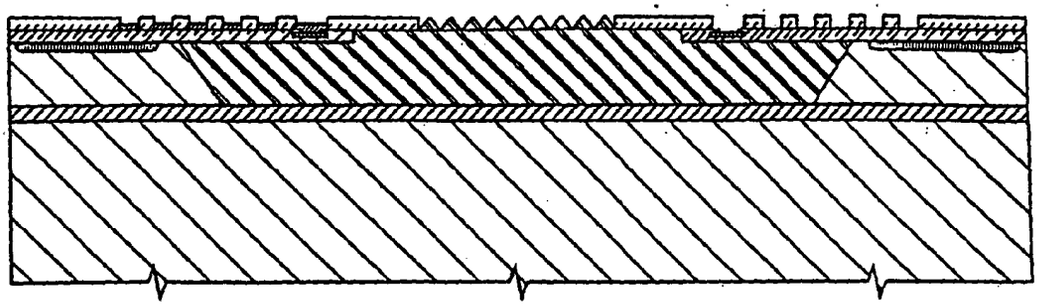

FIG. 290

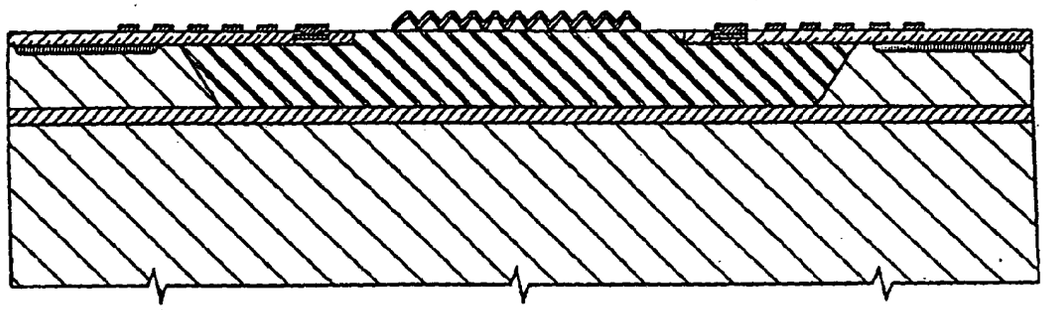

FIG. 291

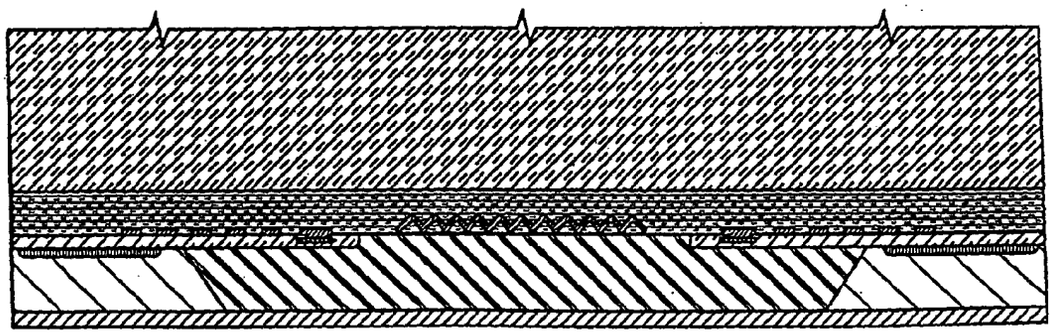

FIG. 292

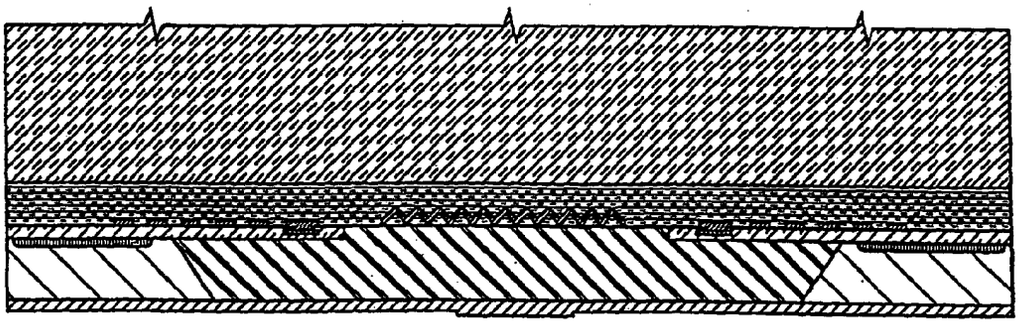

FIG. 293

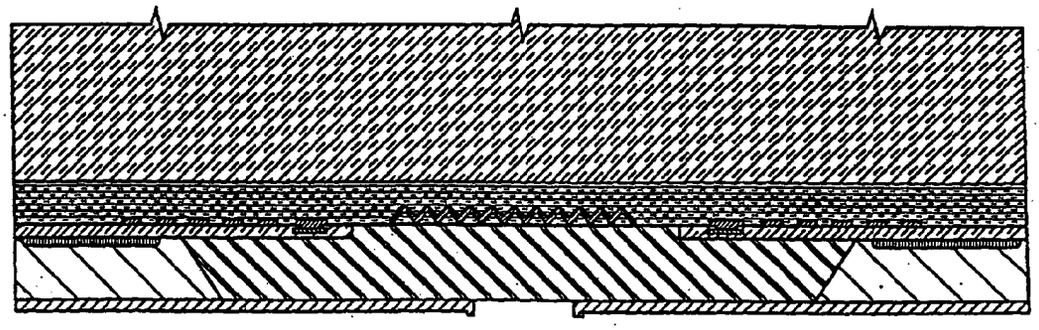

FIG. 294

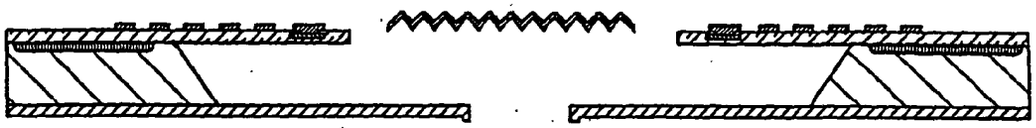

FIG. 295

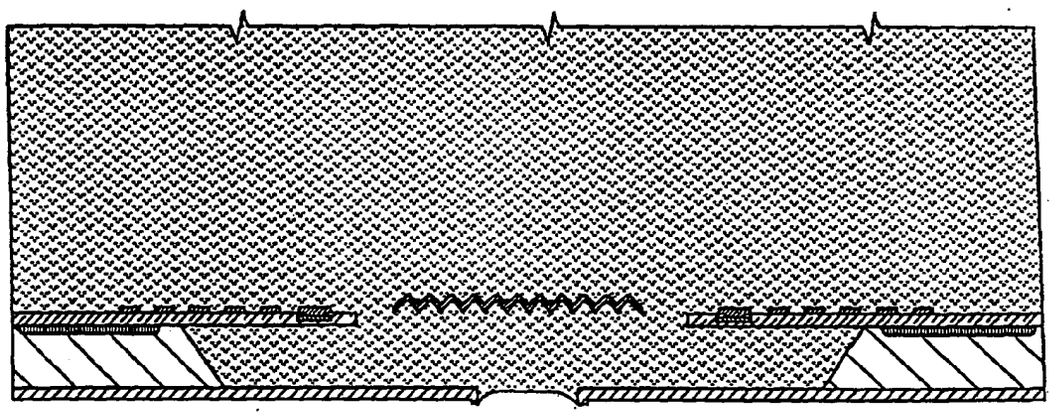

FIG. 296

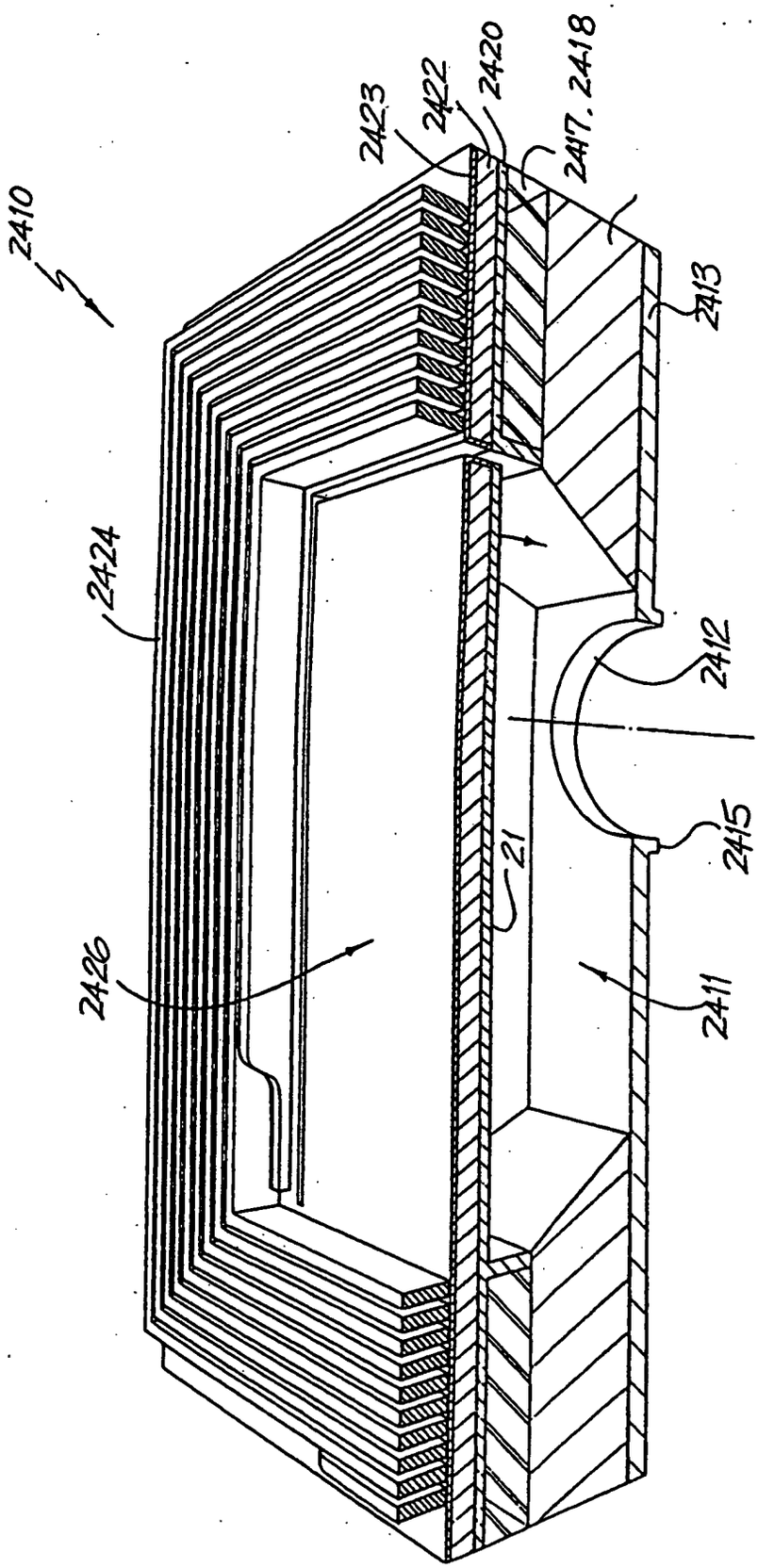
2410
2423
2422
2420
2417, 2418
2413
2424
2412
2415
21
2426
2411

FIG. 297

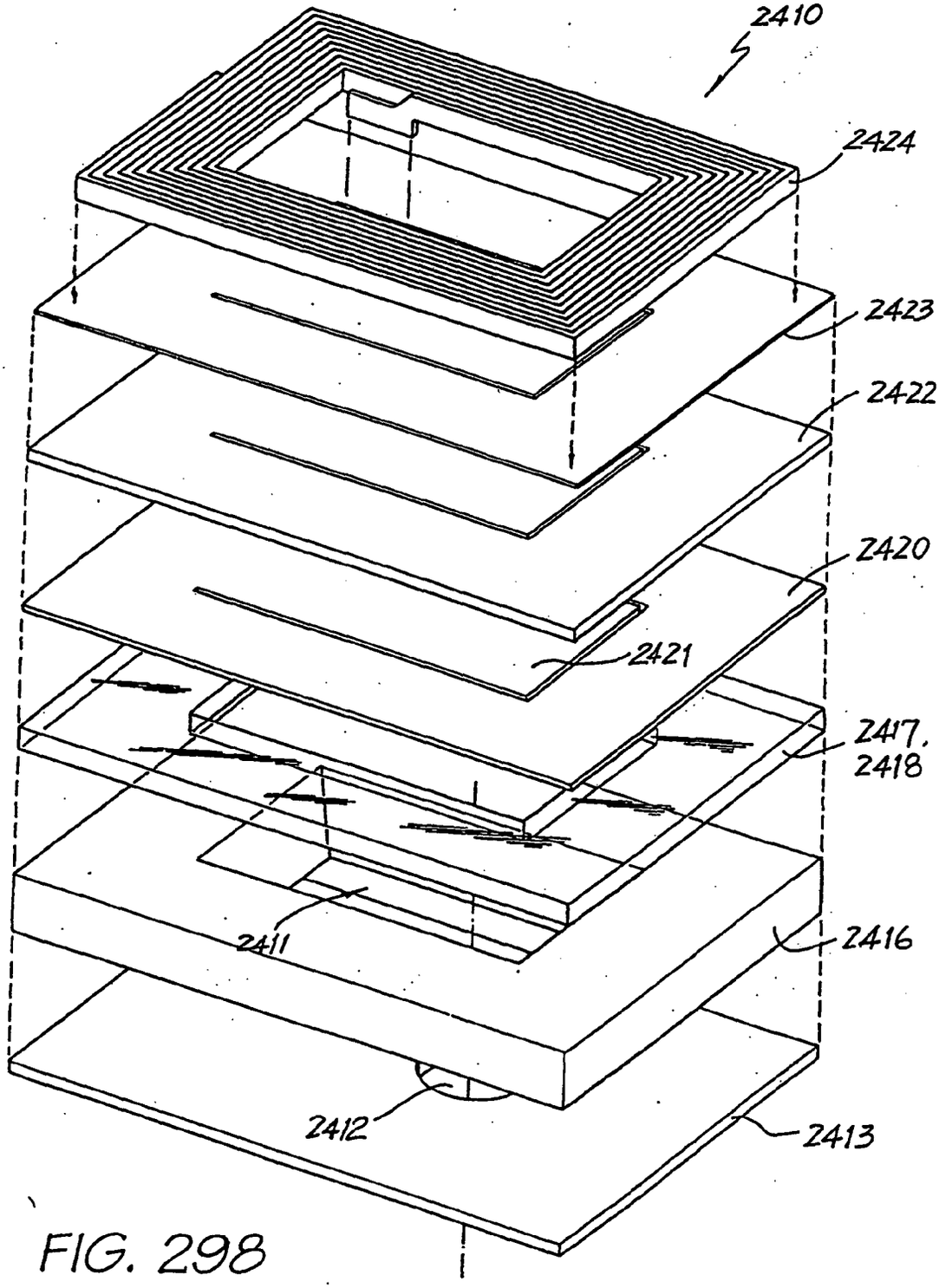

FIG. 298

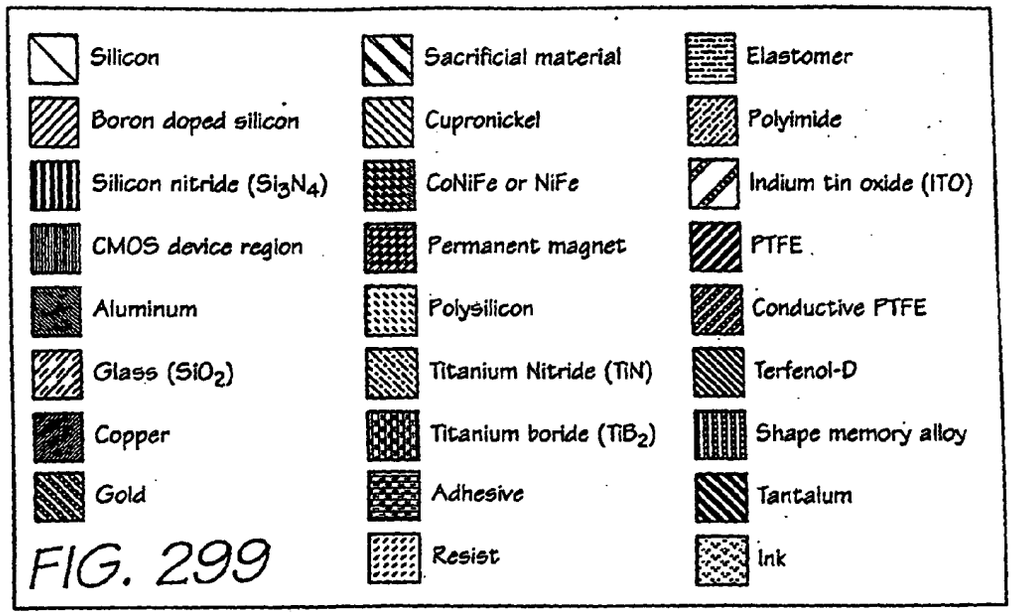

FIG. 299

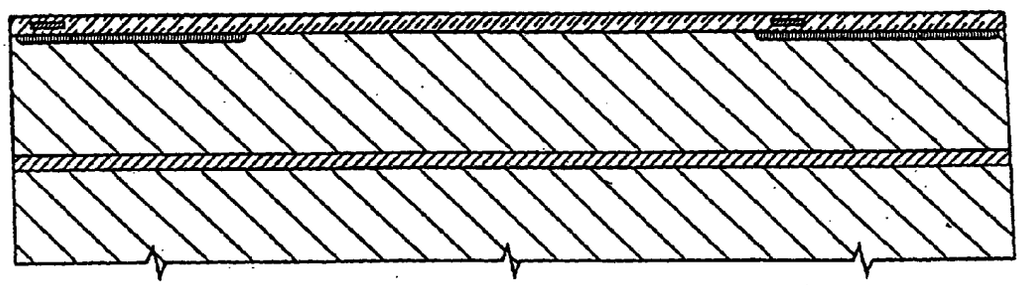

FIG. 300

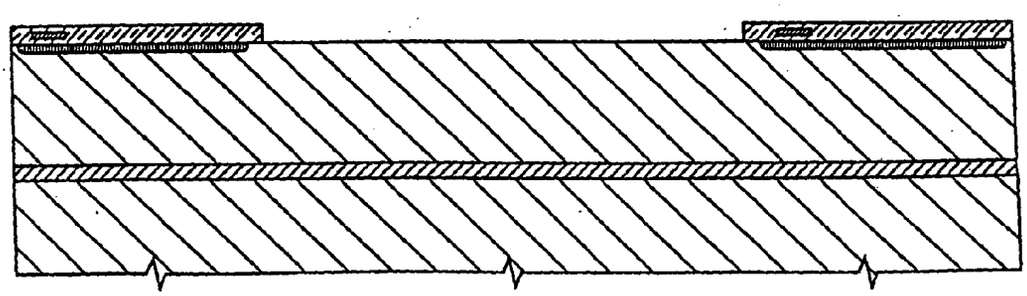

FIG. 301

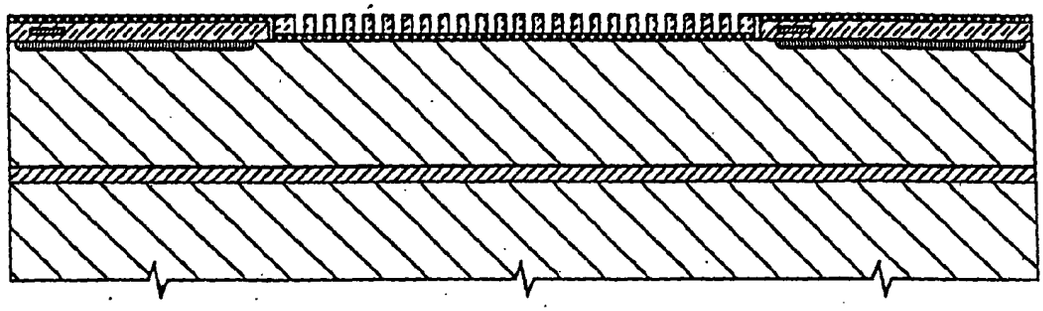

FIG. 302

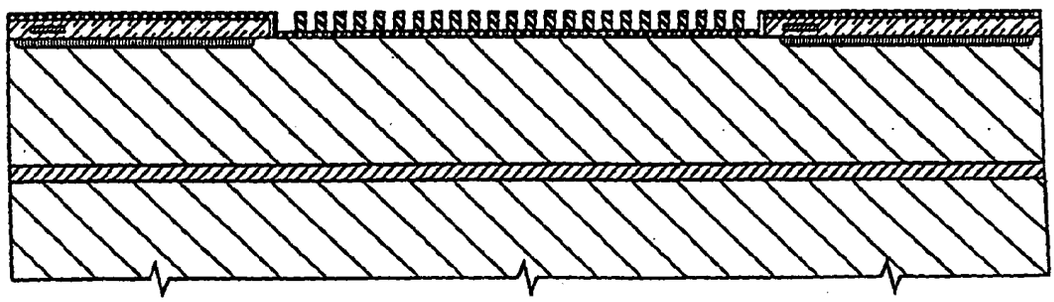

FIG. 303

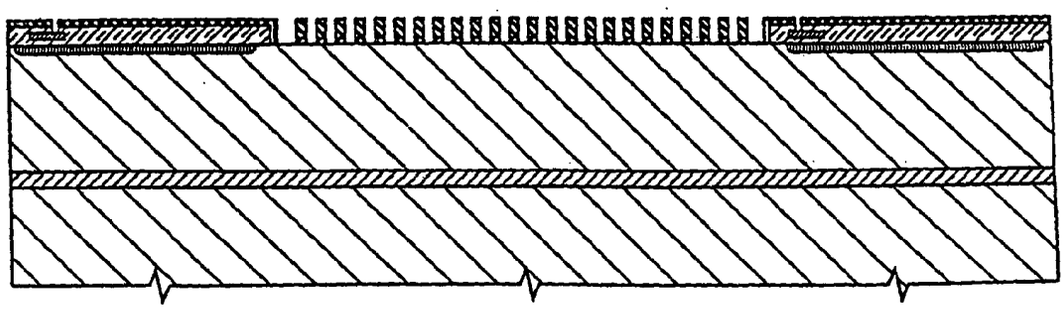

FIG. 304

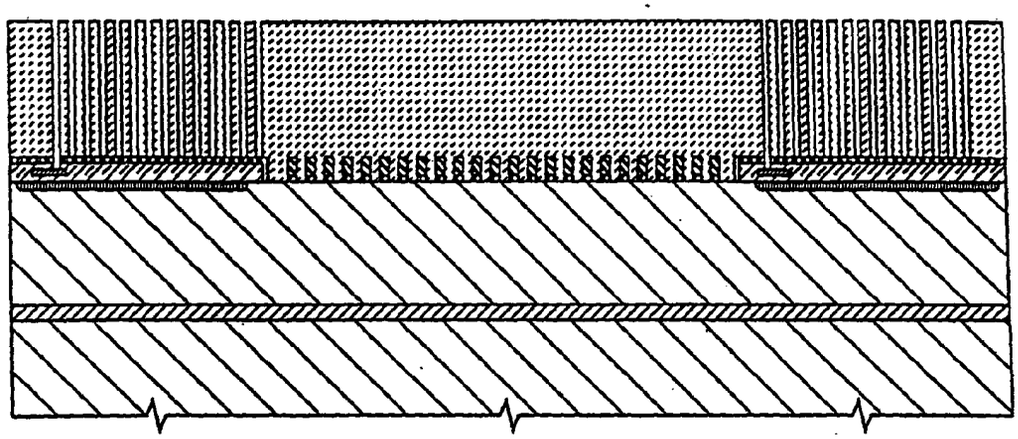

FIG. 305

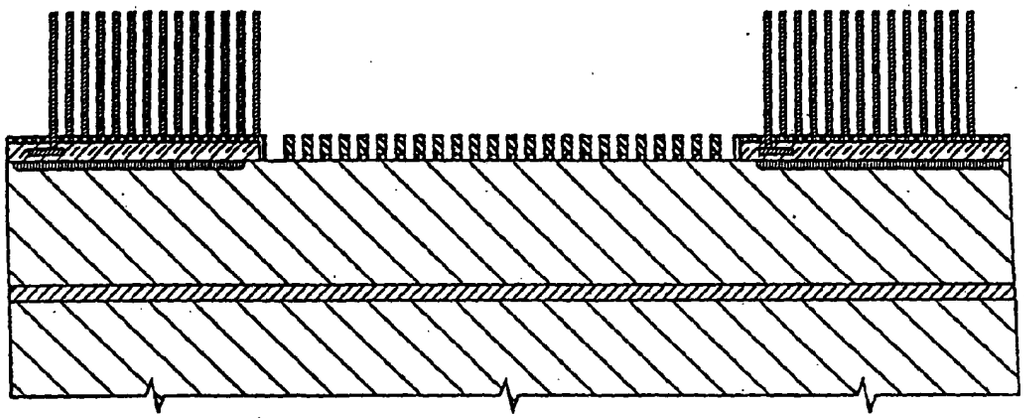

FIG. 306

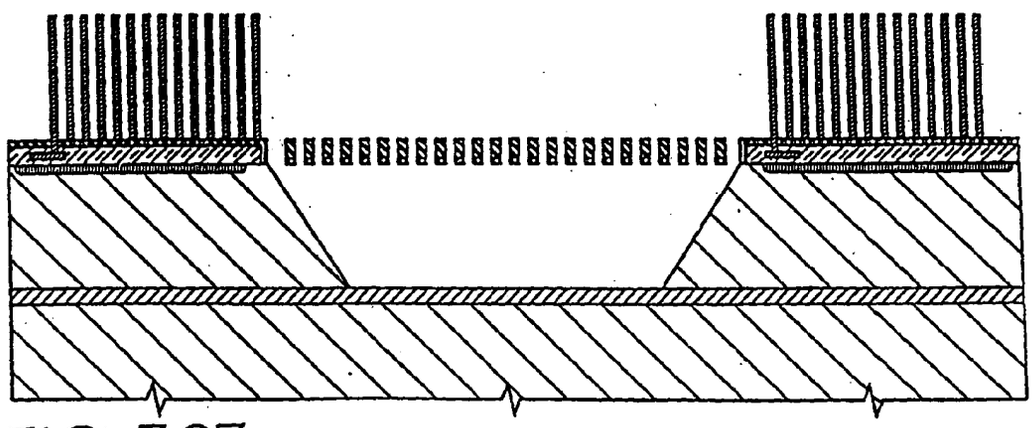

FIG. 307

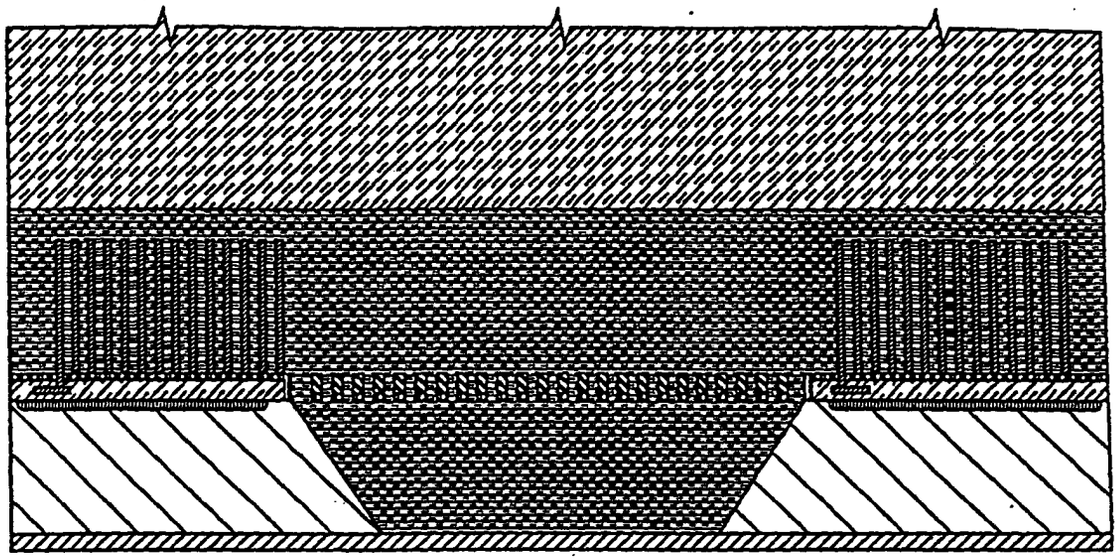

FIG. 308

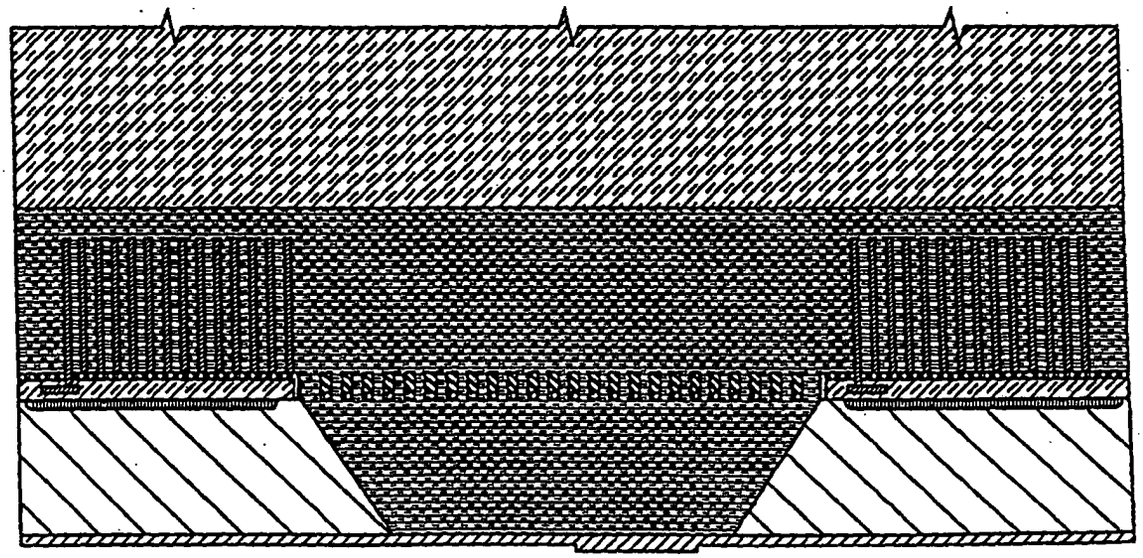

FIG. 309

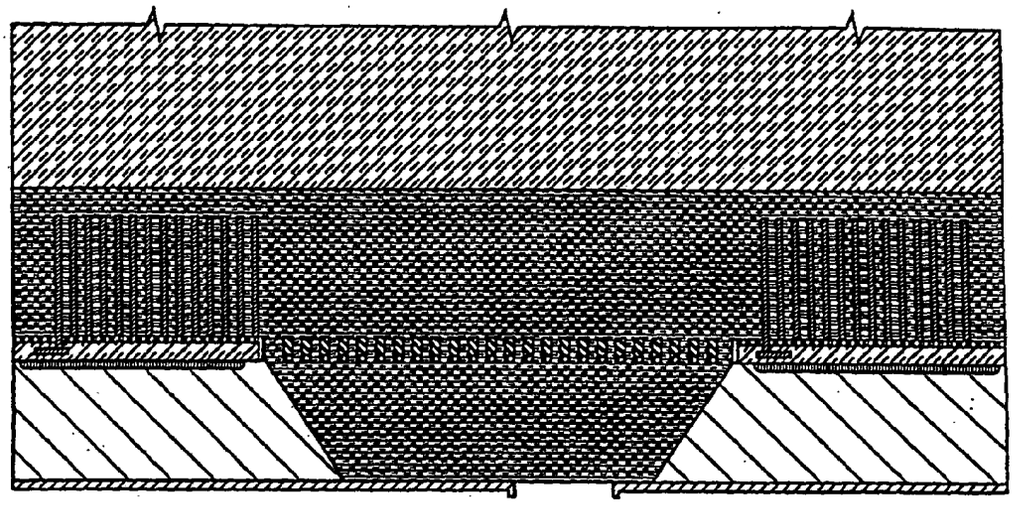

FIG. 310

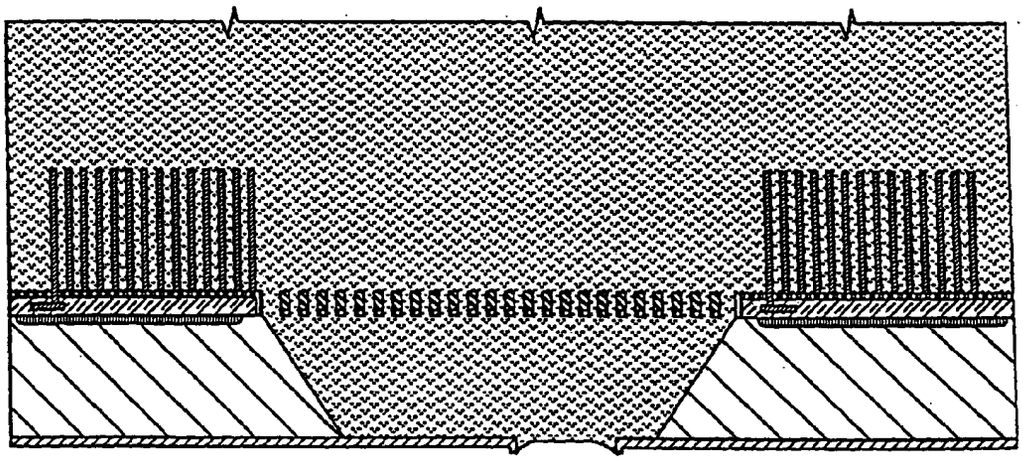

FIG. 311

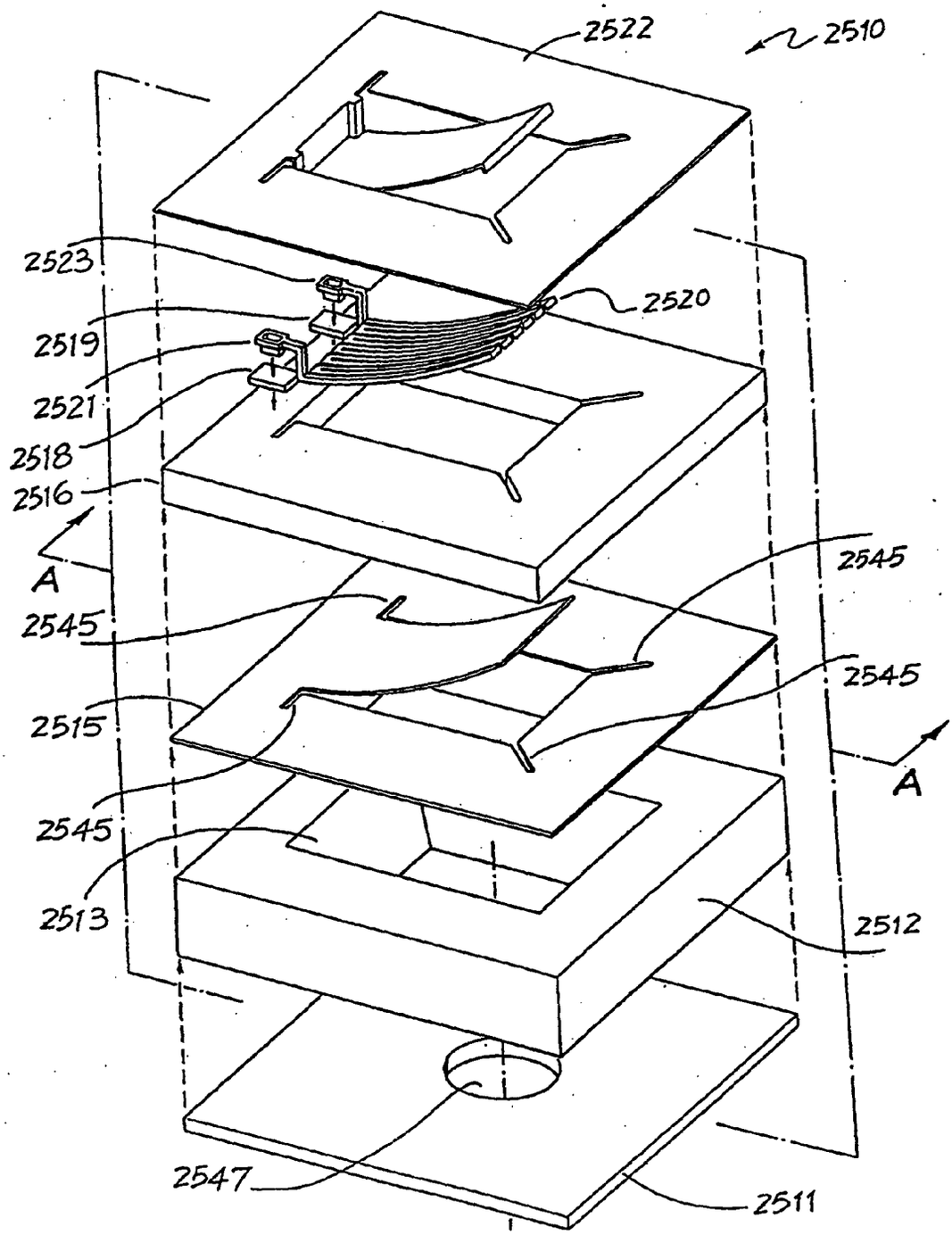
2522
2510
2523
2520
2519
2521
2518
2516
A
2545
2545
2545
2515
2545
A
2513
2512
2547
2511

FIG. 312

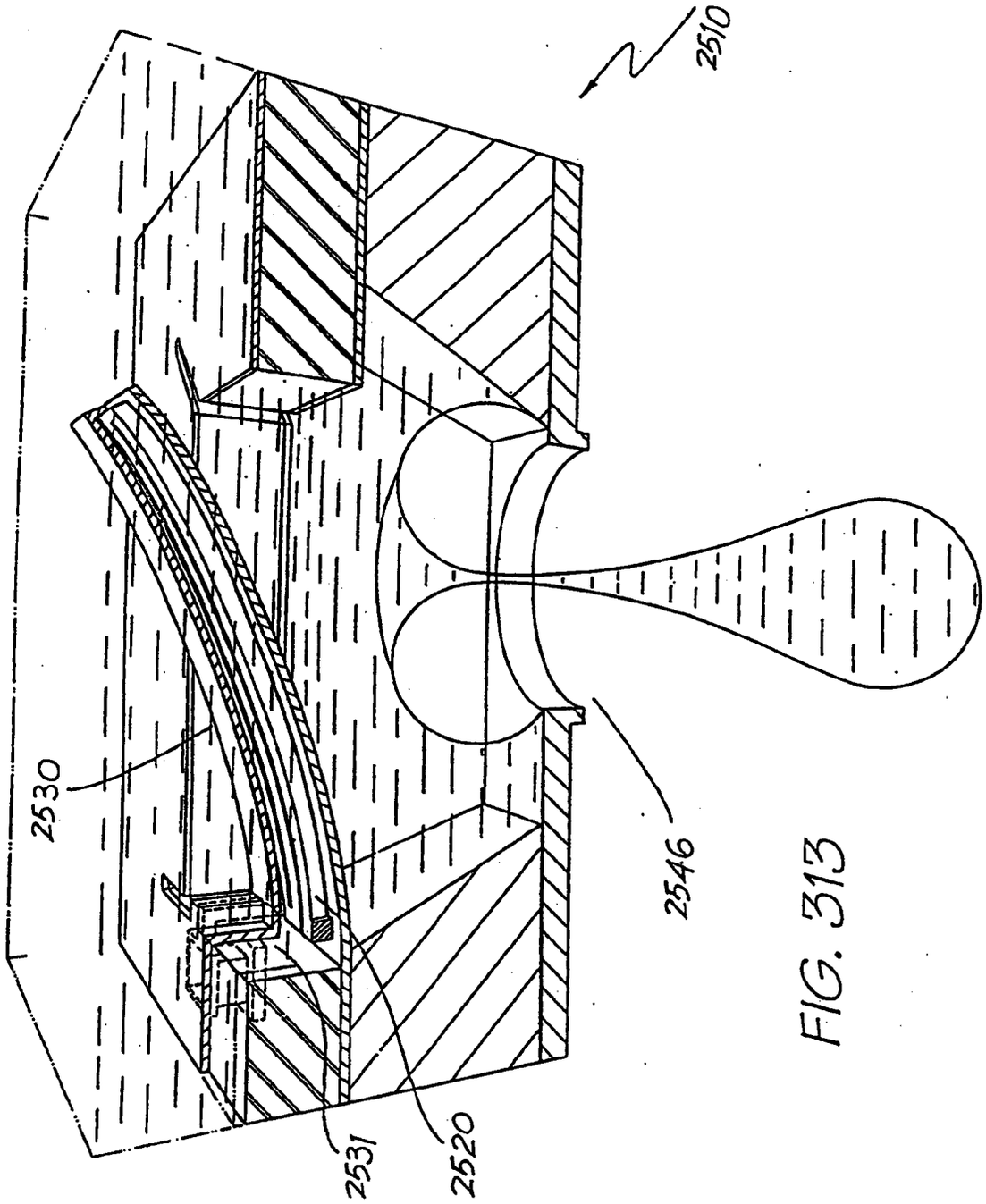

FIG. 313

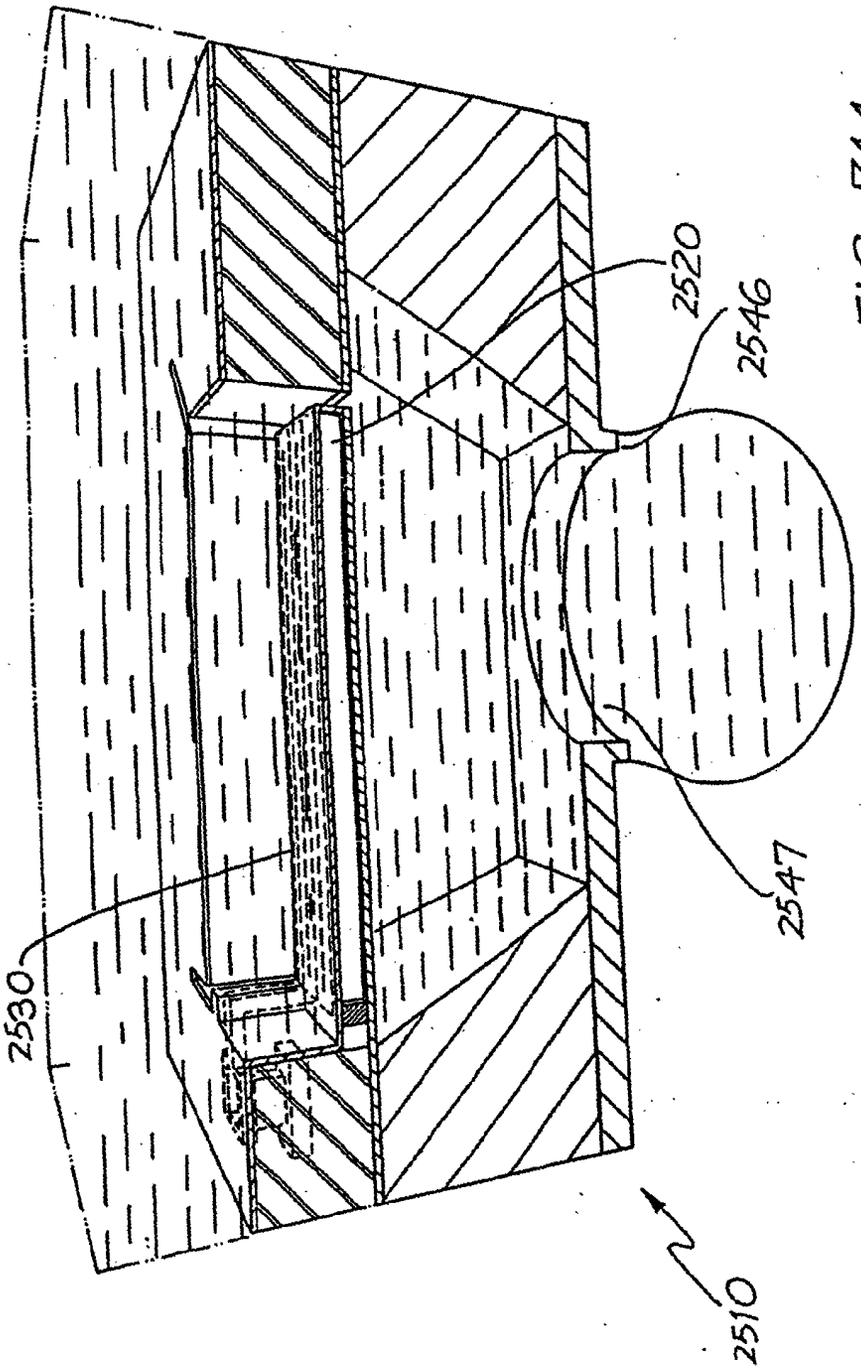

FIG. 314

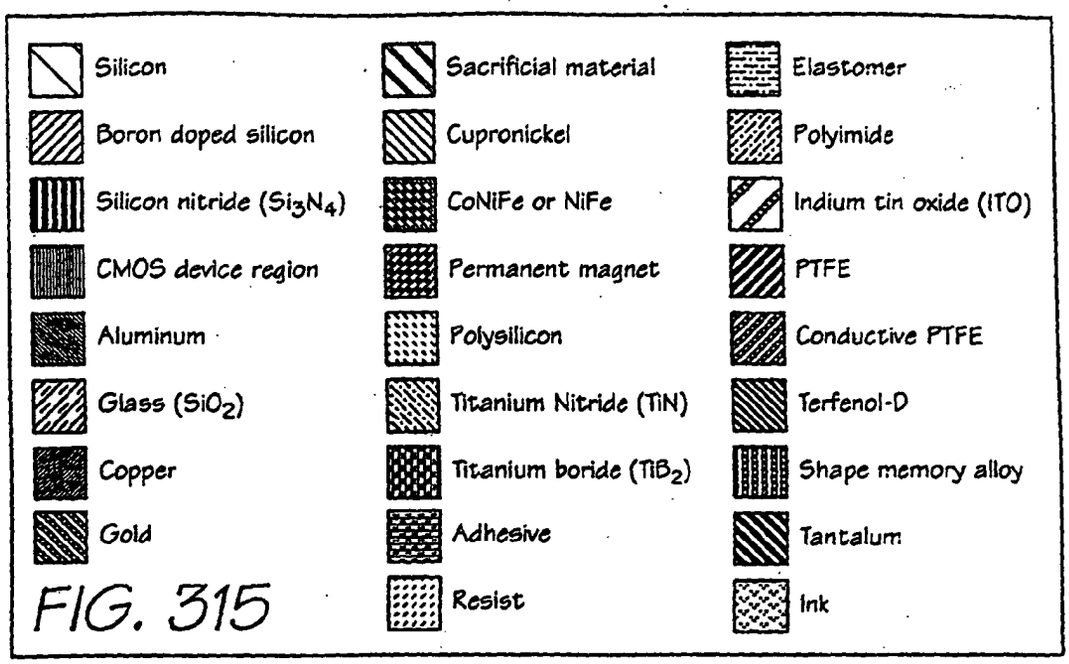

FIG. 315

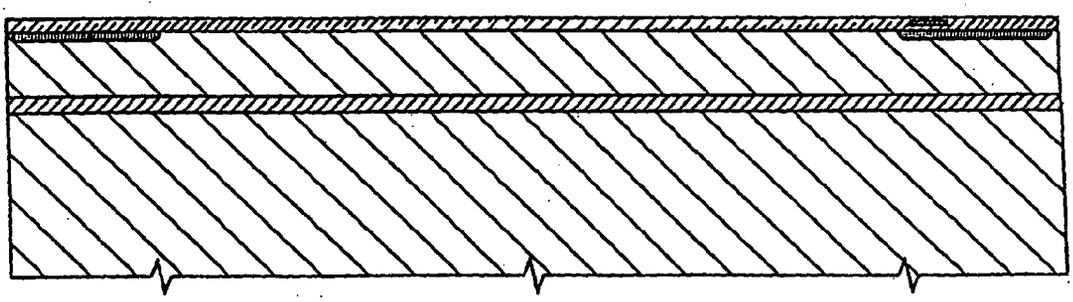

FIG. 316

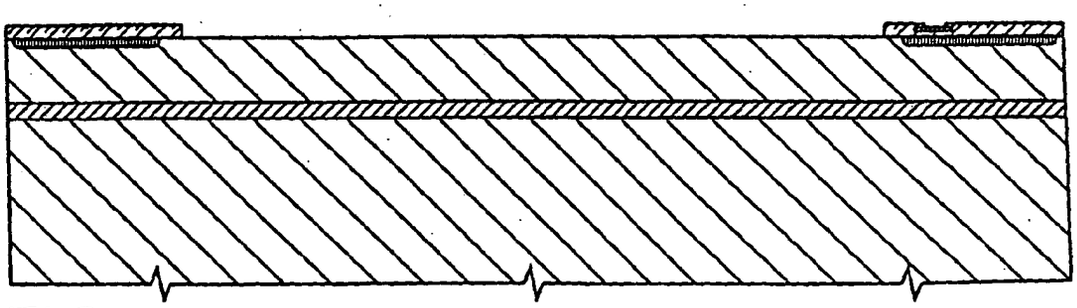

FIG. 317

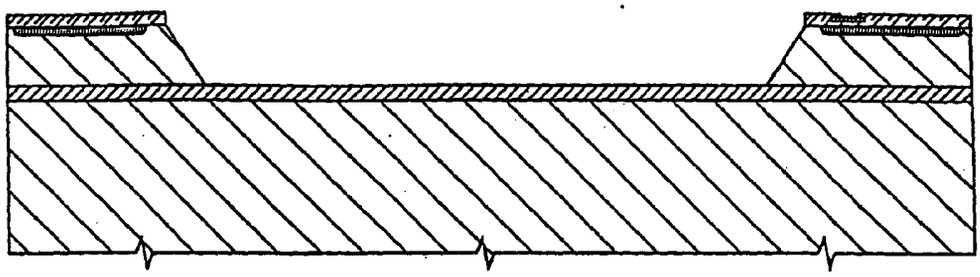

FIG. 318

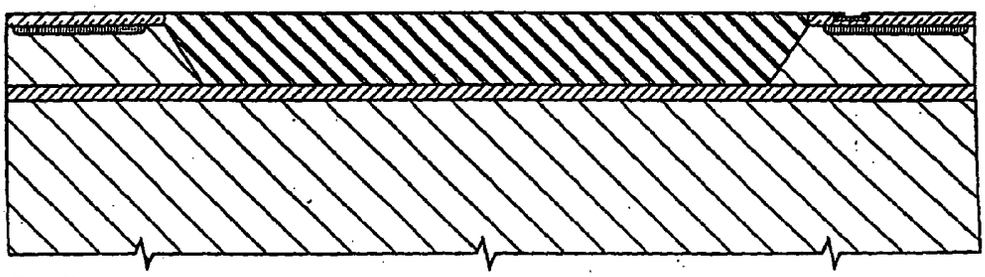

FIG. 319

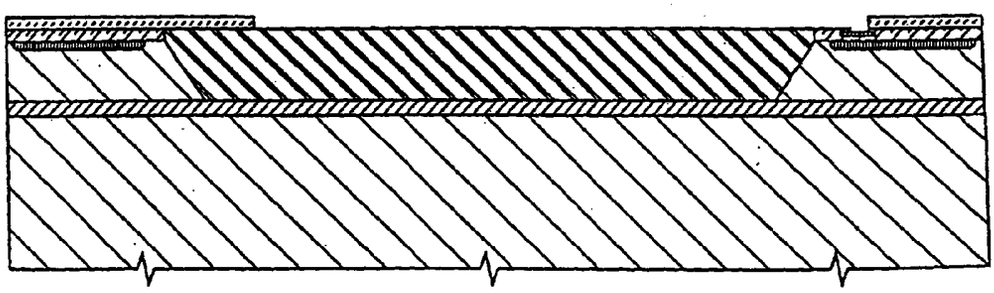

FIG. 320

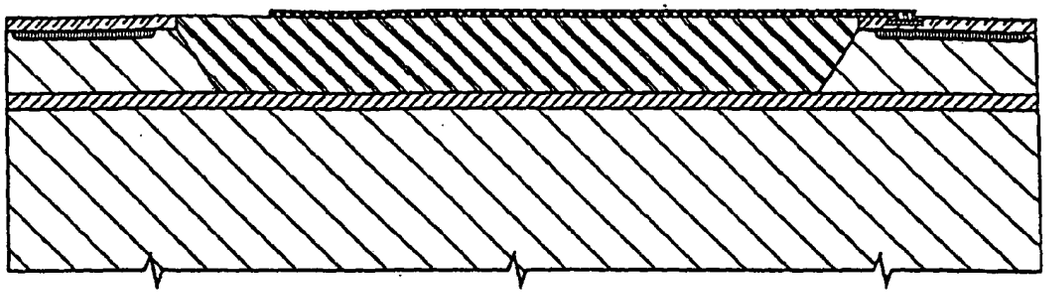

FIG. 321

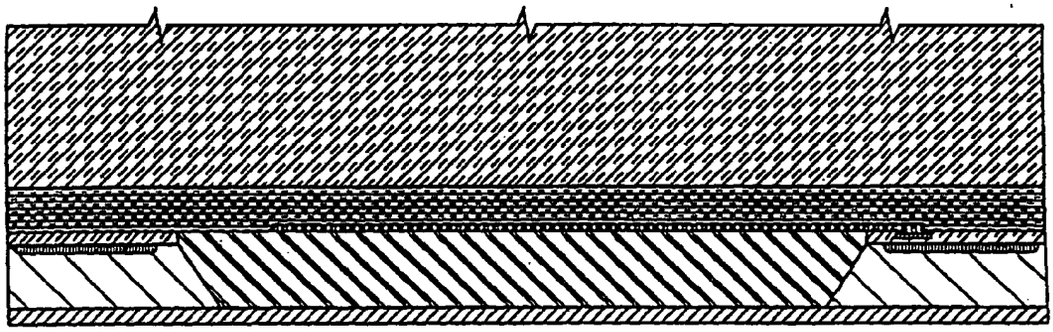

FIG. 322

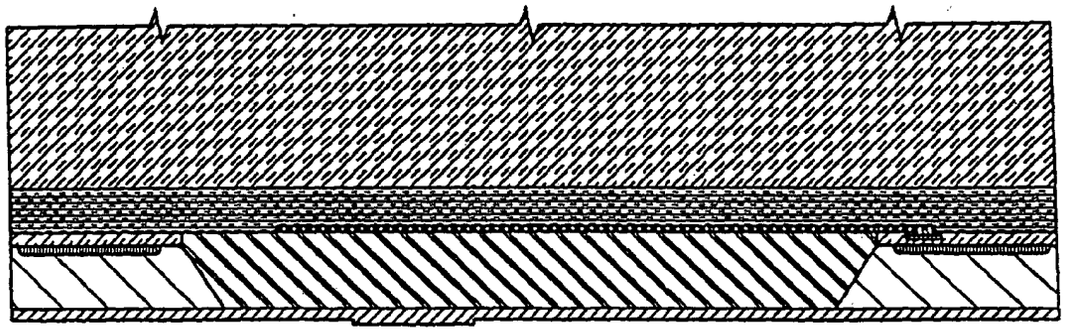

FIG. 323

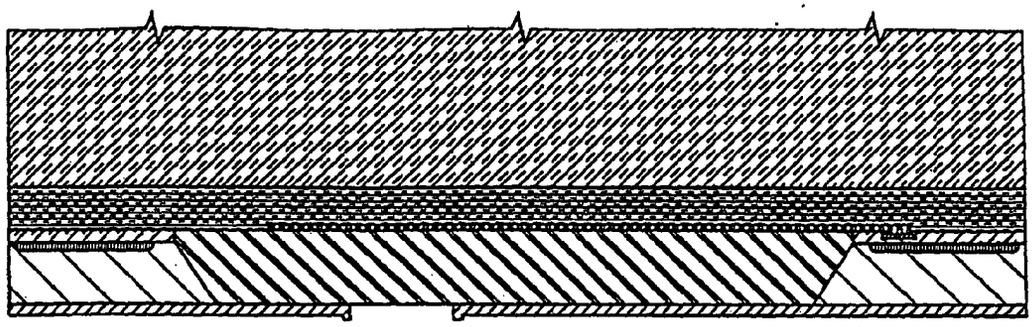

FIG. 324

FIG. 325

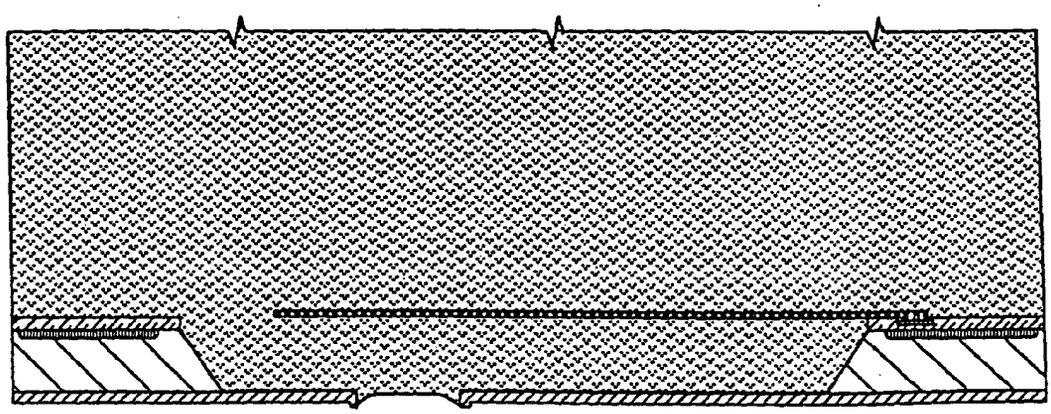

FIG. 326

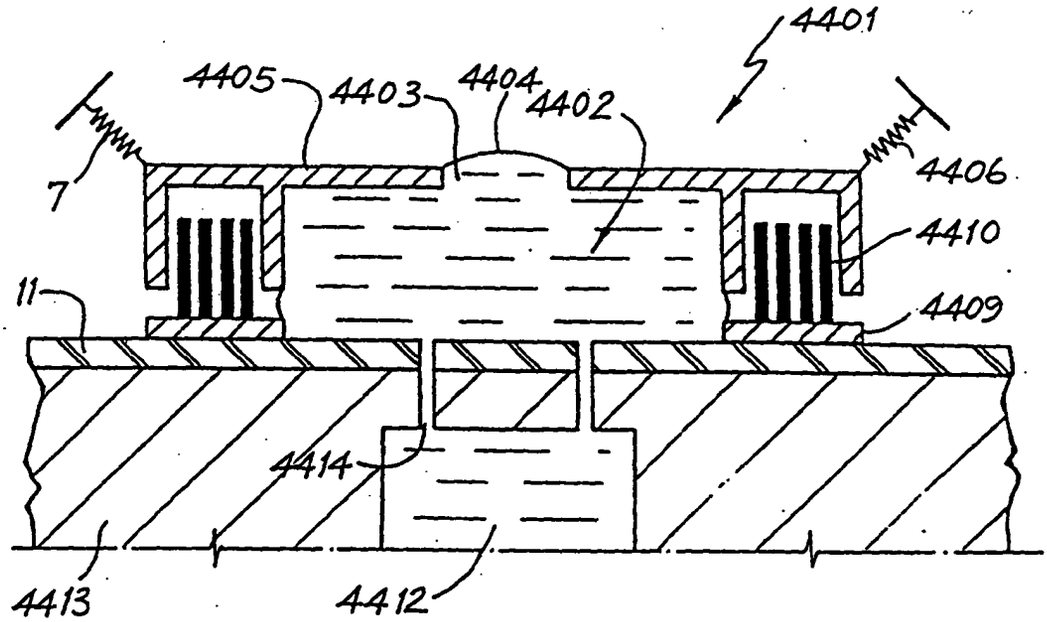

FIG. 327

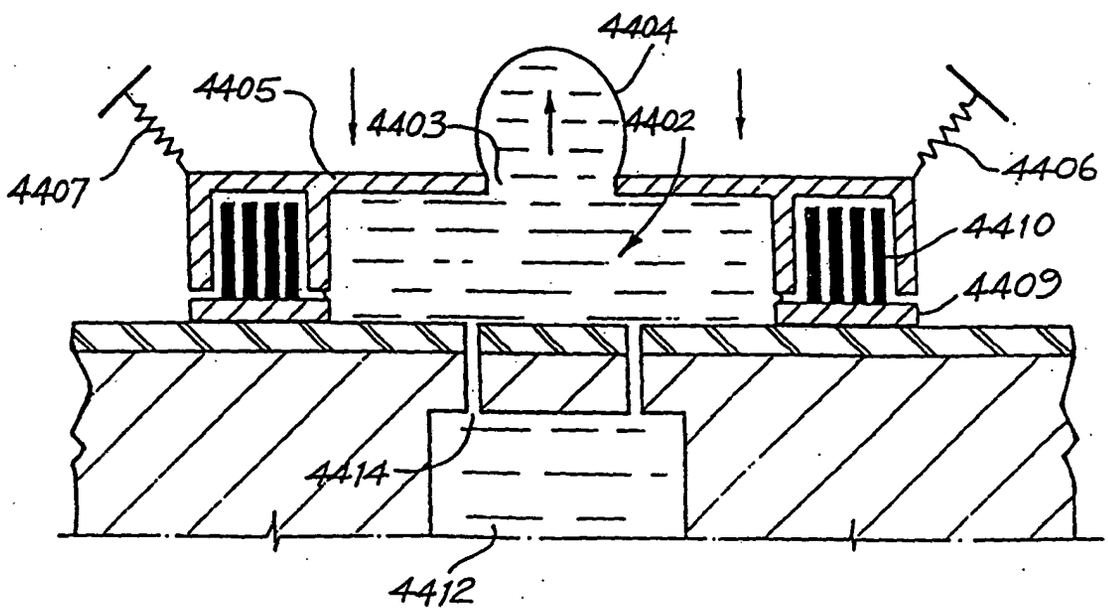

FIG. 328

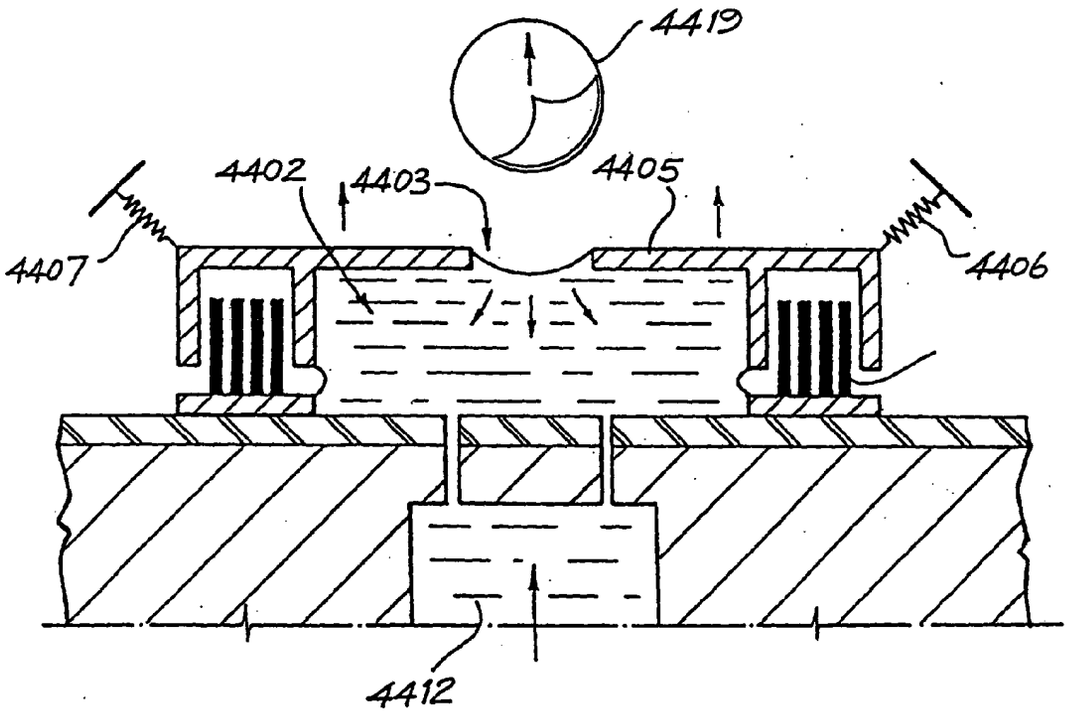

FIG. 329

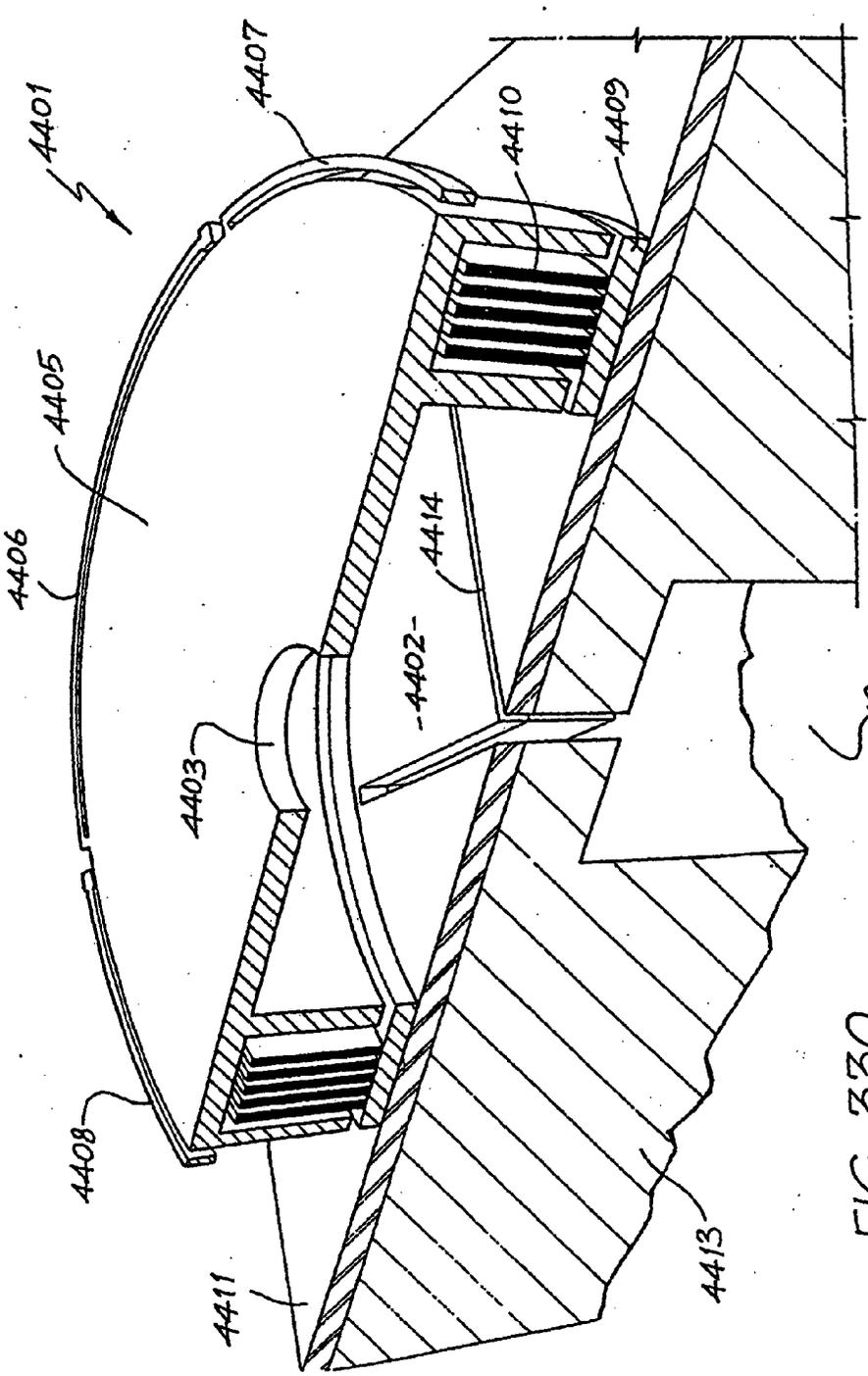
4401
4407
4410
4409
4405
4406
4414
4402
4403
4412
4408
4411
4413

FIG. 330

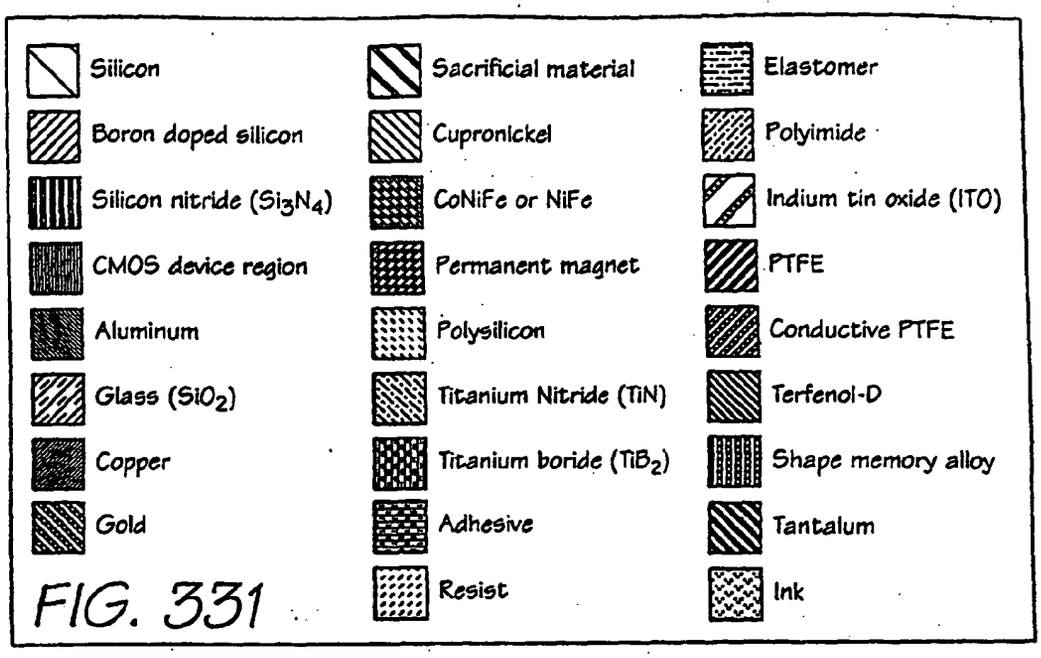

FIG. 331

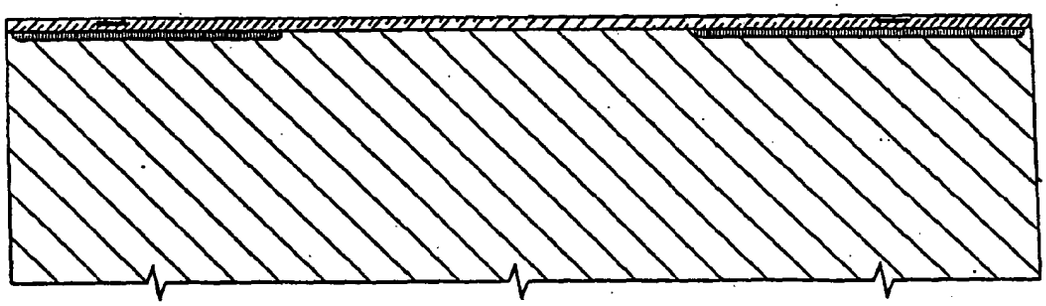

FIG. 332

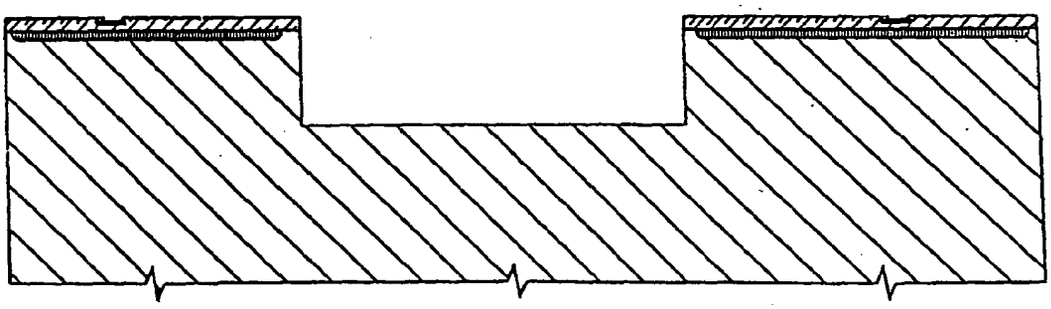

FIG. 333

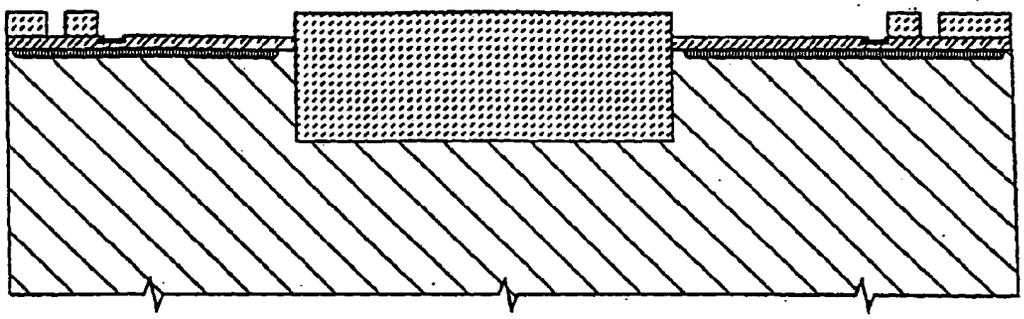

FIG. 334

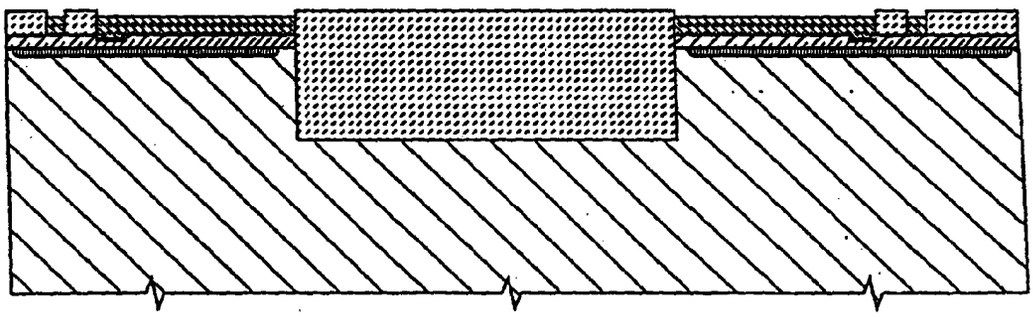

FIG. 335

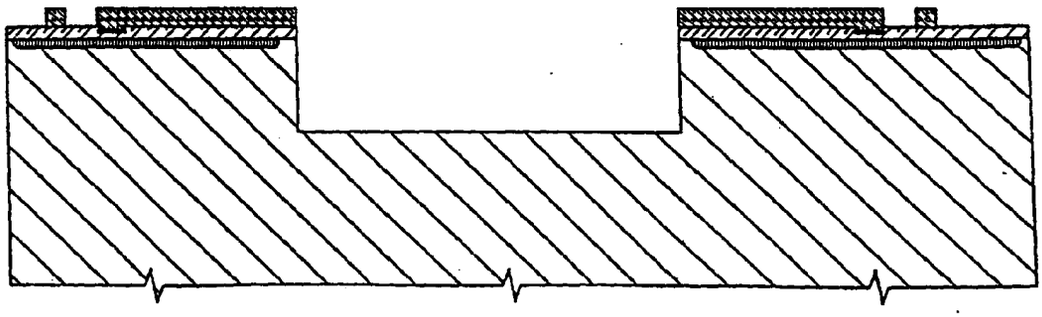

FIG. 336

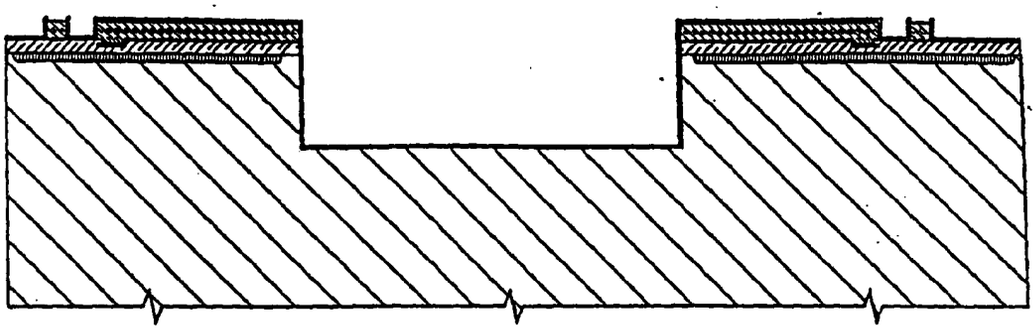

FIG. 337

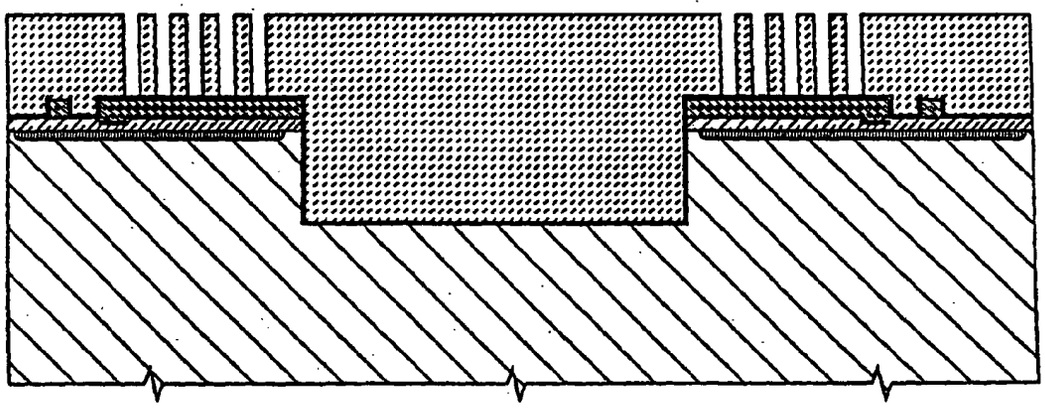

FIG. 338

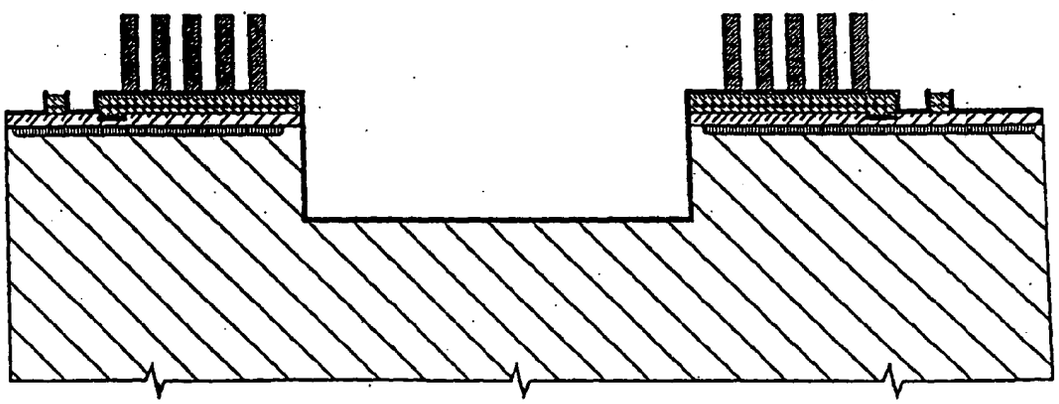

FIG. 339

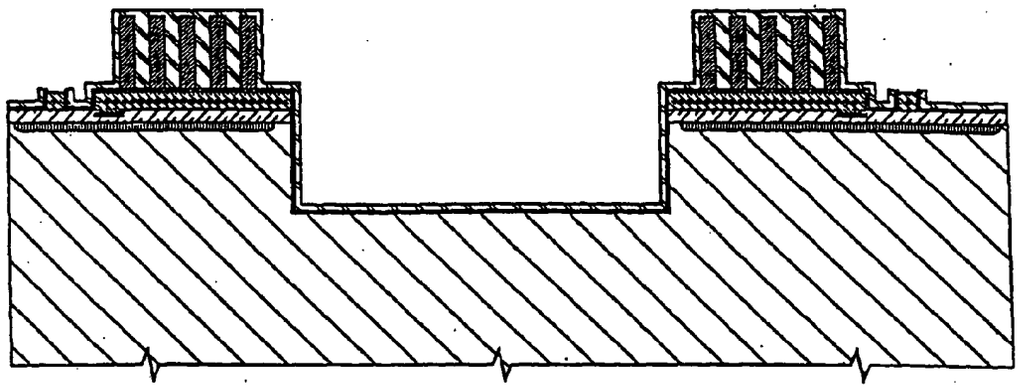

FIG. 340

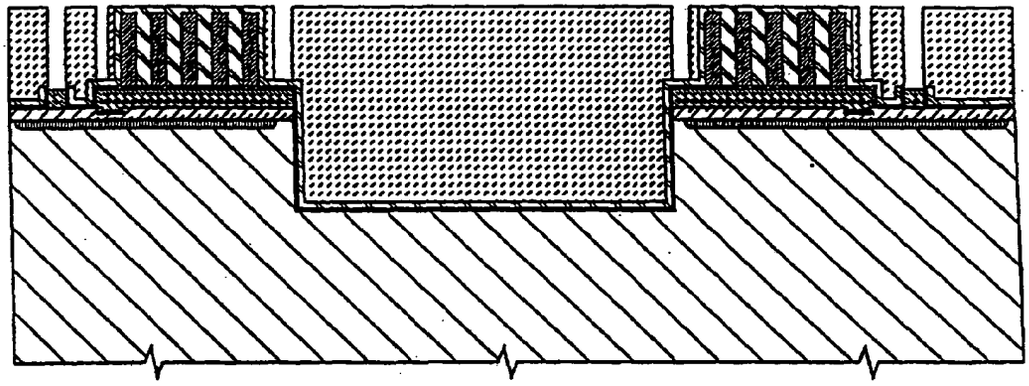

FIG. 341

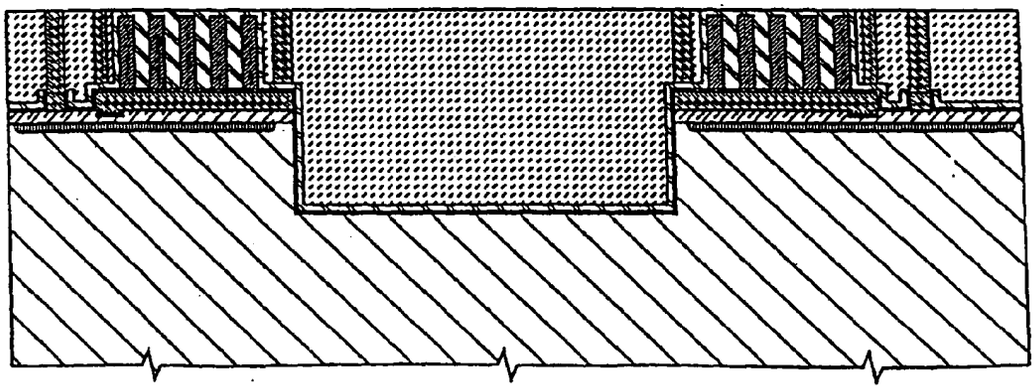

FIG. 342

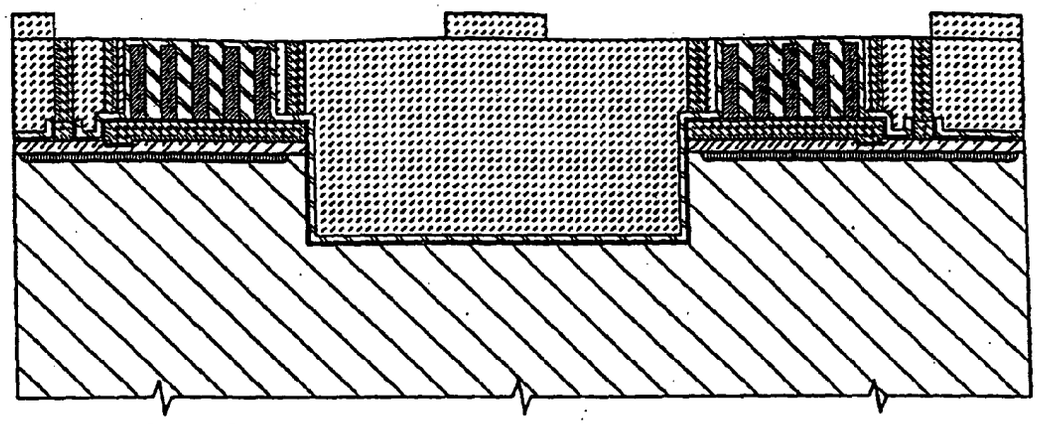

FIG. 343

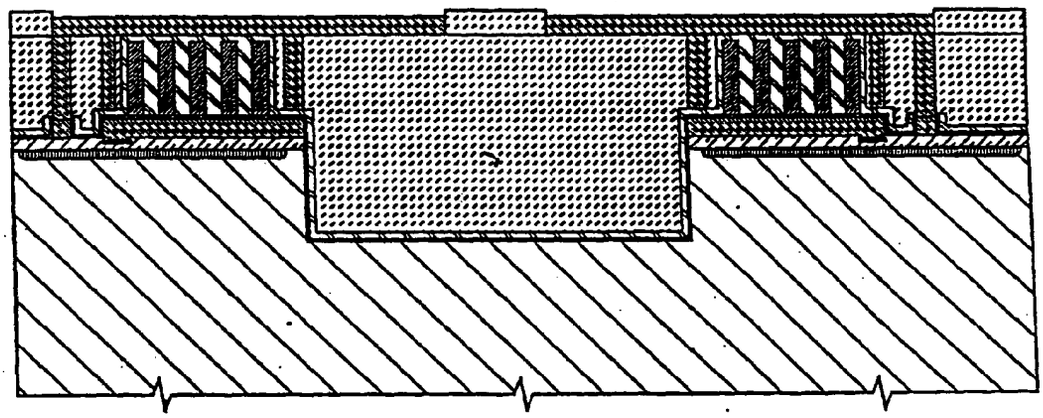

FIG. 344

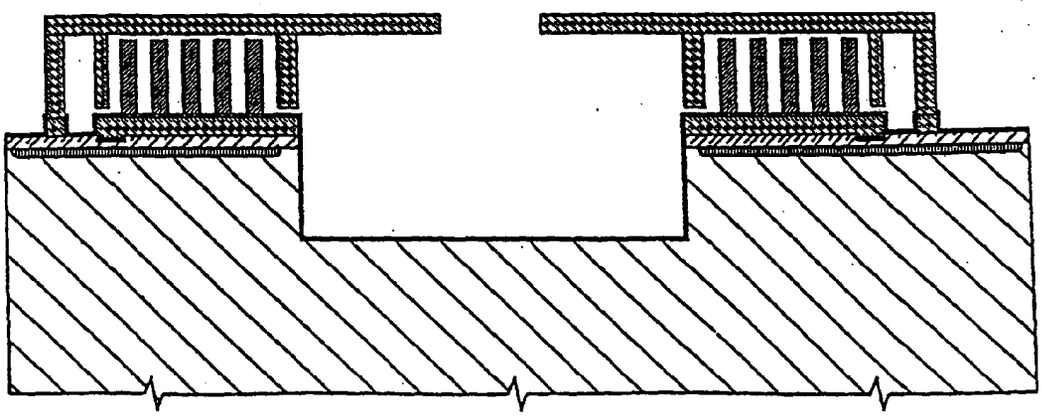

FIG. 345

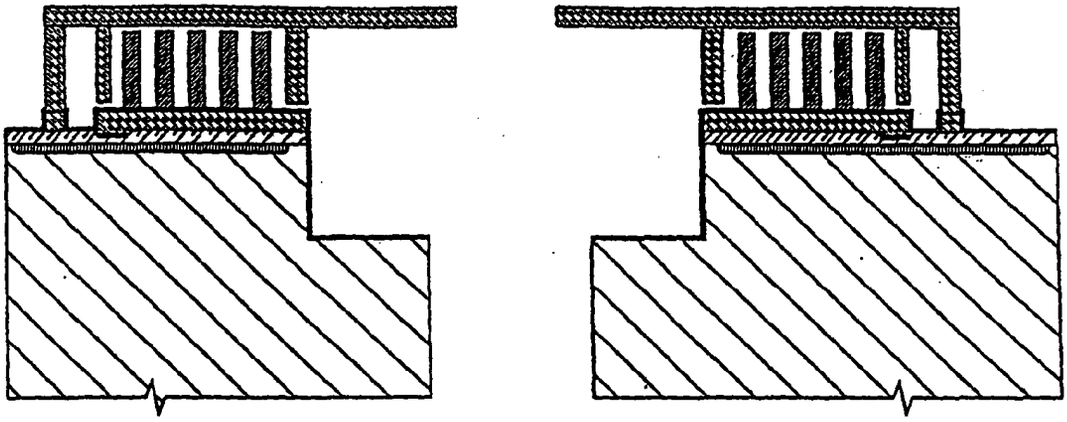

FIG. 346

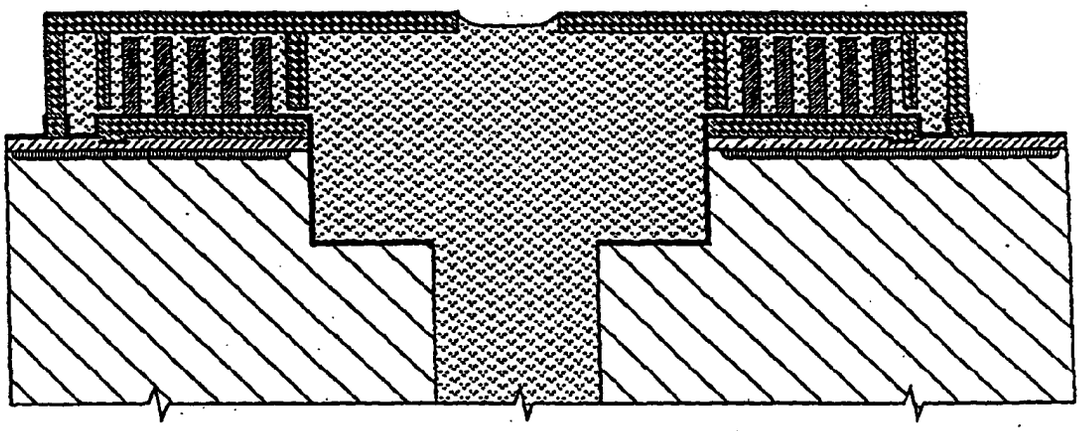

FIG. 347