May 1, 1934. H. C. ENGELHARDT 1,956,614

ELECTRIC FAN AND SUPPORTING MEANS THEREFOR

Filed Feb. 14, 1933

Fig.1.

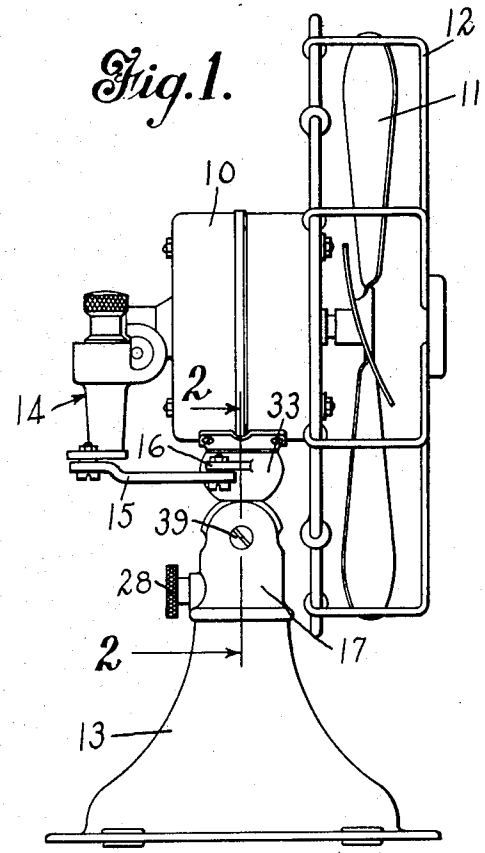

Fig.2.

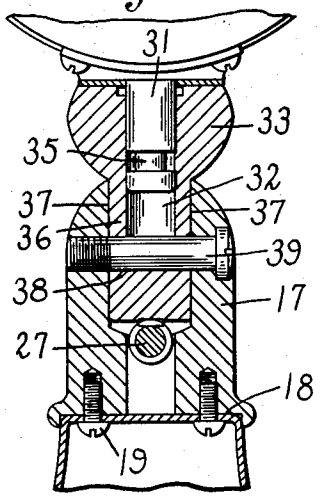

Fig.3.

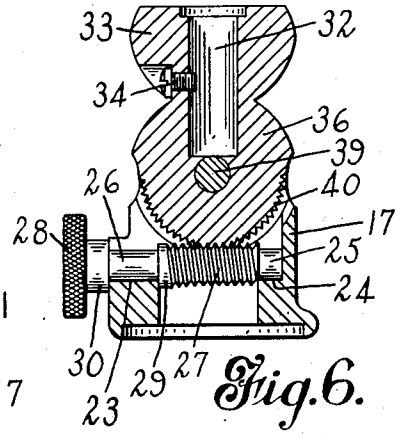

Fig.4.

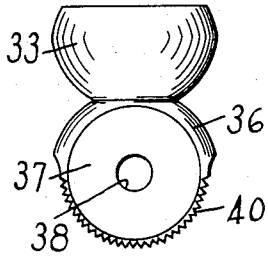

Fig.5.

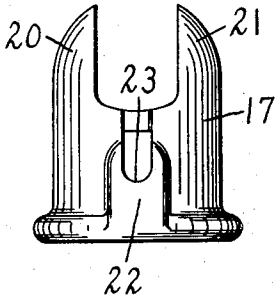

Fig.6.

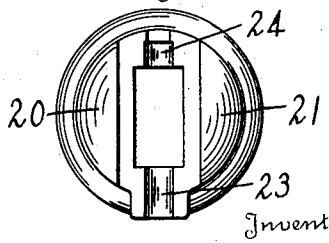

Inventor

Henry C. Engelhardt

By Rockwell & Barthelow

Attorneys

Patented May 1, 1934 1,956,614

UNITED STATES PATENT OFFICE

1,956,614

ELECTRIC FAN AND SUPPORTING MEANS THEREFOR

Henry C. Engelhardt, New Haven, Conn., assignor to The A. C. Gilbert Company, New Haven, Conn., a corporation of Maryland

Application February 14, 1933, Serial No. 656,665

1 Claim. (Cl. 248—15)

This invention relates to electric fans, and more particularly to a novel means of supporting an electric fan from a base whereby the fan may be readily and conveniently moved or tilted to inclined or angular positions with respect to the base and held in such adjusted positions. The construction provided by the invention eliminates the usual clamping mechanism provided for this purpose wherein it was customary to provide a pivot bolt passing through the pivot about which the fan was adjusted, and a wing nut positioned upon the pivot bolt. In practice it was necessary to loosen the wing nut, move the fan manually to the desired position, and then tighten the wing nut to clamp the fan in the adjusted position.

One object of the present invention is to provide a fan with an arrangement for adjusting the angle of the same relatively to the base, whereby the fan will automatically remain in the position to which it is moved.

Another object of the invention is to provide a convenient and easily manipulated means for adjusting a fan relatively to its base.

A still further object of the invention is the provision of means for adjusting the fan body relatively to its base which may be manipulated without danger of the fingers of the operator coming in contact with the fan blades.

More particularly, the invention resides in the provision of a worm screw and worm wheel for adjusting the fan relatively to its base, the worm screw being provided in such a position that it is manipulated from that side of the fan base opposite the fan itself whereby the fan may be readily and easily adjusted without danger to the person adjusting it and without the necessity of having to loosen and tighten clamping nuts or screws, as has been the case in certain prior constructions.

To these and other ends, the invention consists in the novel features and combinations of parts to be hereinafter described and claimed.

In the accompanying drawing:

Fig. 1 is a side elevational view of a fan embodying my improvements;

Fig. 2 is a sectional view on line 2—2 of Fig. 1;

Fig. 3 is a sectional view through the fan adjusting mechanism taken at right angles to the view shown in Fig. 2;

Figs. 4 and 5 are detail views of the yoke and stud of the adjusting device; and

Fig. 6 is a top view of the yoke shown in Fig. 5.

To illustrate a preferred embodiment of my invention, I have shown an electric motor 10, on the shaft of which is carried a fan 11 within the guard 12. The fan is supported from a base 13, this support being accomplished by means secured to the base and to the casing of the motor 10. At the rear of the motor is shown oscillating mechanism, designated generally by the numeral 14, but as the particular structure of the oscillating mechanism is not a part of the present invention, it need not be further described except to state that at the lower end of such mechanism is pivoted one end of a link 15 which at its other end is pivoted to a lug 16.

A yoke 17 is secured to the base 13, this yoke being slightly enlarged and having a downwardly facing recess 18 at its lower end to receive and embrace the upper end of the base. The yoke may then be secured to the base by screws or the like 19 passing upwardly into the bottom of the yoke.

The yoke 17 is bifurcated at its upper end to provide upstanding spaced ears 20 and 21 and is provided upon one side below said ears with a boss 22. In this boss, and in the wall of the yoke upon the side opposite the boss, are provided bearing sockets 23 and 24, shown more especially in Fig. 6, to receive reduced portions 25 and 26 of a worm screw 27 having a knurled finger piece 28 by which it may be turned.

As shown particularly in Fig. 3, the bearing sockets 23 and 24 open upwardly into the space between the ears 20 and 21 so that the worm screw may be inserted into this space and then moved downwardly into the sockets 23 and 24. It will be observed that this screw is provided with shoulders 29 and 30 which between them embrace the wall of the yoke 17 to hold the scerw against longitudinal movement.

To the lower side of the fan housing 10 is secured a post 31 which is rotatably received in the bore 32 of a block or bracket member 33. The post 31 may be held against removal by the screw 34, the end of which enters an annular recess 35 in the post to permit rotation or oscillation of the fan relatively thereto. The lug 16 is secured to the block 33 so that when the oscillating mechanism is in operation, the post 31 will be oscillated within the opening or socket 32.

At its lower end the block 33 is provided with a member 36 of substantially circular shape but having flat sides 37, which sides are adapted to be received between the ears 20 and 21 of the yoke member 17. The member 36 is provided with a central opening 38 through which is passed a pivot screw 39 which also passes through open-

ings of the ears 20 and 21 of the yoke and is threadedly received in one of these openings.

The circular portion of the member 36 is slightly reduced in diameter at its lower end and provided peripherally about such reduced portion with worm teeth 40, providing in effect a worm wheel which meshes with the teeth of the worm 27.

It will be apparent that after the worm screw 27 is positioned within the bearing sockets 23 and 24, and the member 36 positioned between the spaced ears 20 and 21 of the yoke and the pivot bolt 39 put into place, the worm screw 29 will be effectively held in place both as to longitudinal and transverse movements without any other securing means. Longitudinal movements of this screw will be prevented by the shoulders 29 and 30 as well as by the fact that the end of the screw will be lodged against the end of the socket 24, and transverse movement of the screw, which could only take place in an upward direction due to the shape of the bearing sockets 23 and 24, will be prevented by the engagement of the worm 40 with the worm of the screw.

It will also be apparent that when the block member 33 is moved about the pivot pin 39, the fan may be tilted or adjusted to any desired angular position, which tilting or adjusting movement will not in any way interfere with the oscillating movement due to the fact that the oscillating mechanism is connected to the bracket 33 above the pivot about which the tilting takes place. Moreover, this tilting movement may be accomplished by merely manipulating the worm screw 27 by means of the knurled end 28, and due to the engagement of the worm and worm teeth 40 no clamping means will be necessary to hold the fan in adjusted position, as it will remain in any position to which it is moved, the weight of the fan not being sufficient to overcome the resistance of the worm screw. Moreover, the adjustment may be made from the side opposite that upon which the fan blades are positioned so that there will be no likelihood of the fingers coming in contact with the fan.

While I have shown and described a preferred embodiment of my invention, it will be understood that it is not to be limited to all of the details shown, but is capable of modification and variation within the spirit of the invention and within the scope of the appended claim.

What I claim is:

An electric fan- comprising a base, a yoke member seated upon and secured to the upper end of the base and being bifurcated at its upper end to present spaced apart ears, a supporting block having a lower flat-sided portion disposed between and pivoted on said ears, said block also having an upper supporting portion provided with an opening through its upper end, a motor housing having a depending post seated in said opening, the lower flat-sided portion of said block being circular in shape and having worm teeth on its lower edge, said yoke having bearing sockets in the walls thereof below said ears, said sockets opening upwardly into the space between the ears and a worm screw rotatably mounted in the sockets and engaging said teeth.

HENRY C. ENGELHARDT.