(12) INTERNATIONAL APPLICATION PUBLISHED UNDER THE PATENT COOPERATION TREATY (PCT)

(19) World Intellectual Property Organization
International Bureau

(43) International Publication Date
23 February 2017 (23.02.2017)

WIPO | PCT

(10) International Publication Number
WO 2017/030641 A1

(51) International Patent Classification:
F16F 15/10 (2006.01) *F16F 15/12* (2006.01)
F16C 27/00 (2006.01) *F16F 15/121* (2006.01)

(21) International Application Number:
PCT/US2016/037371

(22) International Filing Date:
14 June 2016 (14.06.2016)

(25) Filing Language: English

(26) Publication Language: English

(30) Priority Data:
62/207,578 20 August 2015 (20.08.2015) US

(71) Applicant: **SIKORSKY AIRCRAFT CORPORATION** [US/US]; 6900 Main Street, P.O. Box 9729, Stratford, Connecticut 06615 (US).

(72) Inventor: **GMIRYA, Yuriy**; 28 Rice Rd., Woodbridge, Connecticut 06525 (US).

(74) Agent: **HAYTER, Alicia A.**; Cantor Colburn LLP, 20 Church Street, 22nd Floor, Hartford, Connecticut 06103 (US).

(81) Designated States *(unless otherwise indicated, for every kind of national protection available)*: AE, AG, AL, AM, AO, AT, AU, AZ, BA, BB, BG, BH, BN, BR, BW, BY, BZ, CA, CH, CL, CN, CO, CR, CU, CZ, DE, DK, DM, DO, DZ, EC, EE, EG, ES, FI, GB, GD, GE, GH, GM, GT, HN, HR, HU, ID, IL, IN, IR, IS, JP, KE, KG, KN, KP, KR, KZ, LA, LC, LK, LR, LS, LU, LY, MA, MD, ME, MG, MK, MN, MW, MX, MY, MZ, NA, NG, NI, NO, NZ, OM, PA, PE, PG, PH, PL, PT, QA, RO, RS, RU, RW, SA, SC, SD, SE, SG, SK, SL, SM, ST, SV, SY, TH, TJ, TM, TN, TR, TT, TZ, UA, UG, US, UZ, VC, VN, ZA, ZM, ZW.

(84) Designated States *(unless otherwise indicated, for every kind of regional protection available)*: ARIPO (BW, GH, GM, KE, LR, LS, MW, MZ, NA, RW, SD, SL, ST, SZ, TZ, UG, ZM, ZW), Eurasian (AM, AZ, BY, KG, KZ, RU, TJ, TM), European (AL, AT, BE, BG, CH, CY, CZ, DE, DK, EE, ES, FI, FR, GB, GR, HR, HU, IE, IS, IT, LT, LU, LV, MC, MK, MT, NL, NO, PL, PT, RO, RS, SE, SI, SK, SM, TR), OAPI (BF, BJ, CF, CG, CI, CM, GA, GN, GQ, GW, KM, ML, MR, NE, SN, TD, TG).

Declarations under Rule 4.17:

— *as to applicant's entitlement to apply for and be granted a patent (Rule 4.17(ii))*

— *as to the applicant's entitlement to claim the priority of the earlier application (Rule 4.17(iii))*

— *of inventorship (Rule 4.17(iv))*

[Continued on next page]

(54) Title: VIBRATION DAMPING DEVICE FOR AN ELONGATED MEMBER

(57) Abstract: A vibration damping device is configured to reduce vibration that causes lateral flexing of an elongated member that extends along a centerline. The device includes a split sleeve co-extending with and disposed about the elongated member, and a spring that extends about the sleeve and exerts a force that biases the sleeve radially inward.

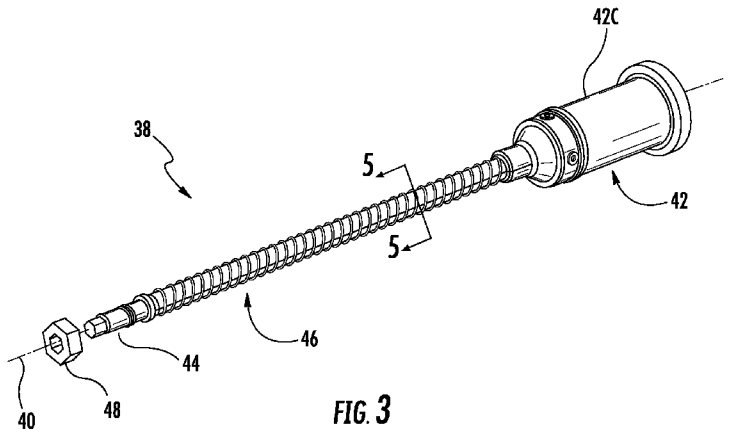

FIG. 3

WO 2017/030641 A1

Published:

— *with international search report (Art. 21(3))*

VIBRATION DAMPING DEVICE FOR AN ELONGATED MEMBER

STATEMENT REGARDING FEDERALLY SPONSORED RESEARCH OR DEVELOPMENT

[0001] This invention was made with government support with the United States Navy under Contract No.: N00019-06-C-0081. The government therefore has certain rights in this invention.

BACKGROUND

[0002] The present disclosure relates to a vibration damping device, and more particularly, to a vibration damping device for an elongated member.

[0003] Elongated members generally of any variety may experience varying vibration modes over a range of frequencies. Such vibrations are known to cause lateral flexing of the member that may over a period of time cause member fatigue and/or failure of the member and/or adjacent components. Moreover, if vibration frequencies are similar to the natural resonating frequency of the member, more drastic flexing may occur. A wide range of known vibration damping devices may reduce some or most of vibration-induced flexing of the member; however, due to a large number of member applications, further improvements and/or designs of vibration damping devices is desirable.

SUMMARY

[0004] A vibration damping device for reducing lateral displacement of an elongated member extending along a centerline according to one, non-limiting, embodiment of the present disclosure includes, a split sleeve co-extending with and disposed about the elongated member; and a first spring extending about the sleeve and configured to exert a force that biases the sleeve radially inward.

[0005] Additionally to the foregoing embodiment, the sleeve is bisected longitudinally into separate first and second segments.

[0006] In the alternative or additionally thereto, in the foregoing embodiment, each of the first and second segments span circumferentially between opposite first and second edges, and wherein the first edge of the first segment opposes the second edge of the second segment and the second edge of the first segment opposes the first edge of the first segment.

[0007] In the alternative or additionally thereto, in the foregoing embodiment, wherein the first edge of the first segment and the second edge of the second segment define a first

gap there-between when in an un-flexed state, and define a second gap that is larger than the first gap when in a flexed state against the biasing force of the first spring.

[0008] In the alternative or additionally thereto, in the foregoing embodiment, the second edge of the first segment and the first edge of the second segment define a third gap there-between when in the un-flexed state, and define a fourth gap that is larger than the third gap when in the flexed state against the biasing force of the first spring

[0009] In the alternative or additionally thereto, in the foregoing embodiment, the first and second segments are geometrically identical.

[0010] In the alternative or additionally thereto, in the foregoing embodiment, the first spring is a coiled spring constructed and arranged to helically wrap about the sleeve.

[0011] In the alternative or additionally thereto, in the foregoing embodiment, the device includes a second coiled spring including a plurality of coils with each coil extending circumferentially about the sleeve, and wherein each coil is axially adjacent to and spaced from a respective coil of a plurality of coils of the first spring.

[0012] In the alternative or additionally thereto, in the foregoing embodiment, the first spring is a coiled spring and is disposed at least in part in a groove defined by the sleeve.

[0013] In the alternative or additionally thereto, in the foregoing embodiment, the sleeve includes a collar projecting radially outward and the groove is defined by the collar.

[0014] In the alternative or additionally thereto, in the foregoing embodiment, the vibration damping device is part of a drive system quill assembly, the elongated member is a connecting rod of the drive system quill assembly, and the centerline is a rotational axis.

[0015] A gear train according to another, non-limiting, embodiment includes a first gear orientated to rotate about an axis; a second gear orientated to rotate about the axis; and a quill assembly extending axially between the first and second gears, and including a quill shaft engaged to the first and second gears and including a plurality of segments, a connecting rod concentrically disposed inside the shaft and configured to hold the plurality of segments axially together, a split sleeve disposed about the connecting rod, and a first spring extending about the sleeve for exerting a force that biases the sleeve radially inward for damping vibration.

[0016] Additionally to the foregoing embodiment, the rod is under tension and at least one segment of the plurality of segments of the quill shaft carries a torque.

[0017] In the alternative or additionally thereto, in the foregoing embodiment, the gear train is part of a split torque gear box.

[0018] In the alternative or additionally thereto, in the foregoing embodiment, the split torque gear box is a helicopter split torque gear box.

[0019] In the alternative or additionally thereto, in the foregoing embodiment, the connecting rod has an axial length over diameter ratio of about greater than ten.

[0020] A method of installing a vibration damping device onto an elongated member extending along a centerline according to another, non-limiting embodiment includes, installing first and second segments of a sleeve about the elongated member from opposite radial directions; and installing a spring about the sleeve.

[0021] Additionally to the foregoing embodiment, the method includes placing at least a portion of the spring in a groove defined by the sleeve for axially indexing the spring.

[0022] The foregoing features and elements may be combined in various combinations without exclusivity, unless expressly indicated otherwise. These features and elements as well as the operation thereof will become more apparent in light of the following description and the accompanying drawings. However, it should be understood that the following description and drawings are intended to be exemplary in nature and non-limiting.

BRIEF DESCRIPTION OF THE DRAWINGS

[0023] Various features will become apparent to those skilled in the art from the following detailed description of the disclosed non-limiting embodiments. The drawings that accompany the detailed description can be briefly described as follows:

[0024] FIG. 1 is a side view of a helicopter as one, non-limiting, application of a gear train as one, non-limiting, exemplary embodiment of the present disclosure;

[0025] FIG. 2 is a partial cross section of the gear train as one, non-limiting, embodiment utilizing a vibration damping device;

[0026] FIG. 3 is a perspective view a quill assembly having the vibration damping device;

[0027] FIG. 4 is an exploded perspective view of the quill assembly;

[0028] FIG. 5 is a cross section of the vibration damping device installed about an elongated member in an un-flexed state, and taken along line 5-5 of FIG. 3;

[0029] FIG. 6 is a cross section of the vibration damping device and the elongated member in a flexed state; and

[0030] FIG. 7 is a partial perspective view of vibration damping device illustrating an indexing means.

DETAILED DESCRIPTION

[0031] Referring to FIG. 1, one, non-limiting, example of an application of the present disclosure is illustrated as a rotary wing aircraft 20 (e.g., helicopter) having a rotor 22, an output shaft 24, a drive system or gearbox 26, an input shaft 28 and an engine 30. The engine 30 is configured to provide power to the gearbox 26 via the input shaft 28. Rotational energy of the input shaft 28 is transferred to the gearbox 26 which, in-turn, is transferred to the output shaft 24 at a desired speed for controlled rotation of the rotor 22. The gearbox 26 may be any variety of known gearboxes including a split torque gearbox.

[0032] Referring to FIGS. 2 through 4, the gearbox 26 is illustrated as one, non-limiting, example of an application for a gear train 32 (i.e., two illustrated). The gear train 32 may include a first gear 34, and second gear 36, and an elongated quill assembly 38 engaged to the gears 34, 36 and extending there-between. The quill assembly 38 is configured to rotate about an axis 40 along with the gears 34, 36. As shown, the gears 34, 36 are concentrically located to rotate about axis 40 with the quill assembly 38, however the invention is not limited thereto. While not restricted thereto, the elongated quill assembly 38 may have a length over diameter ratio of greater than ten (10), however it is understood that aspects of the present disclosure could be used with other ratios.

[0033] The quill assembly 38 may include a generally hollow quill shaft 42, a connecting rod or elongated member 44, and a vibration damping device 46 configured to dampen vibration (i.e., lateral flexing) of the rod 44. The quill shaft 42 may include a plurality of axially divided segments 42A, 42B, 42C (i.e., three illustrated in FIG. 2) with segment 42A being rigidly engaged to the gear 34, segment 42C rigidly engaged to gear 36, and segment 42B being in axial contact with and extending axially between segments 42A, 42B. More specifically, the shaft segment 42B may be under axial compression between segments 42A, 42C which are axially biased against segment 42B by the connecting rod 44. Each end of the shaft segment 42B may be rotationally connected to the respective gears 34, 36 by a spline arrangement. The shaft segments 42A, 42C may be engaged (e.g., a threaded arrangement) to the respective gears 34, 36. The gears 34, 36 are generally concentric to and project radially outward from the respective shaft segments 42A, 42C.

[0034] The quill shaft 42 (and to a limited degree the connecting rod 44) facilitate the transfer of rotational energy from the second gear 36 to the first gear 34 and may be under a torsional force. The rod 44 is generally spaced radially inward of the hollow shaft 42 and facilitates an axial connection of the shaft segments 42A, 42B, 42C together. A fastening mechanism, such as a nut 48 may be threaded to one end of the rod 44 and torqued to a pre-

specified amount providing a desired axial force to clamp the segments 42A, 42B, 42C axially together. That is, the rod 44 is under tension, and although the rod 44 may slightly twist with the quill shaft segment 42B, it is generally not under a torsional force during operation (i.e., rotation).

[0035] The vibration damping device may include a split sleeve 50 and at least one coiled spring 52A, 52B (i.e., two illustrated) with each spring 52A, 52B having a plurality of coils 53A, 53B, respectively. When assembled, the split sleeve 50 substantially surrounds the rod 44 and the springs 52A, 52B are coiled or helically wrapped about the sleeve 50. Each coil 53A of the first spring 52A may be axially adjacent to and spaced from a respective coil 53B of the second spring 52B. During operation, and as the shaft 42 and rod 44 spin together about axis 40, the gears 34, 36 may introduce vibration into the rod 44 over a wide range of vibration frequencies. Such frequencies may cross a number of critical modes that could create a resonating vibration causing high stresses in the rod 44. The vibration damping device 46 dampens this vibration. The sleeve 50 and the springs 52A, 52B that generally surround the rod 44, together, facilitate damping of the vibration. That is, the radial movement or flexing of the rod 44 due to vibration is limited by the sleeve 50 and the springs 52A, 52B that absorb the vibration energy and reduce the amplitude of the vibration.

[0036] Referring to FIGS. 4 and 5, to accomplish vibration damping, the sleeve 50 of the vibration damping device 46 may be split in an axial direction and/or bisected in the axial direction forming separate first and second segments 50A, 50B of the sleeve 50 (i.e., a clam shell arrangement). Each segment 50A, 50B may extend the full axial length of the assembled sleeve 50 and may span circumferentially each forming a cross sectional semicircle. More specifically, segment 50A spans circumferentially between and carries opposite, axially extending, edges 54, 56; and, segment 50B spans circumferentially between and carries opposite, axially extending edges 58, 60. When the sleeve 50 is fully assembled and the vibration damping device 46 and the rod 44 are in an un-flexed state 62 (see FIG. 5), edges 54, 56 of the first segment 50A are opposed to and may be slightly spaced circumferentially (i.e., see gap 63 in FIG. 5) from the respective edges 58, 60 of the second segment 50B. Also when in the un-flexed state 62, the radially inward surfaces 65, 67 of the respective sleeve segments 50A, 50B may be in substantial contact with the connecting rod 44.

[0037] Referring to FIG. 6, the vibration damping device 46 and the rod 44 are illustrated in a flexed state 64. When the rod 44 is flexing laterally, due to vibration transmitted from the gears 34, 36 (as one, non-limiting, example), the flexed rod 44 pushes radially outward

upon the split sleeve 50 causing the opposing edges 54, 58 and opposing edges 56, 60 of the respective sleeve segments 50A, 50B to separate further against the biasing force of the springs 52A, 52B, thus forming a gap 69 that is larger than the gap 63 of the un-flexed state 62. This controlled and/or limited separation generally causes an outer diameter of the split sleeve 50 to generally increase, which in-turn causes the diameter of the spring coils 53A, 53B proximate to the flexing to also increase. The increase in coil diameter causes the axial length of the springs 52A, 52B to decrease. The internal resiliency of the springs 52A, 52B and a frictional force between the springs 52A, 52B and the outer surface of the split sleeve 50 generally contribute toward the biasing force that resists rod flexing thereby damping vibration.

[0038] Referring to FIG. 7, an axial indexing mechanism carried between the sleeve 50 and the springs 52A, 52B may include, as one non-limiting example, a collar 66 of the sleeve 50, and an axially extending portion 68 of each spring 52A, 52B. The collar 66 may project radially outward from an outer, cylindrical, surface 70 of the sleeve 50 and may define at least one groove 72 that is opened radially outward and communicates axially through the collar 66. The substantially straight portion 68 of each spring 52A, 52B may be axially located at about mid length of the springs, thus each portion extends between adjacent coils 53A, 53B, respectively. When assembled, the portions 68 of each spring 52A, 52B fits within a respective groove 72 preventing the springs from axially shifting with respect to the sleeve 50.

[0039] The springs 52A, 52B may be made of a steel that resists plastic deformation, and the split sleeve 50 may be made of brass or bronze. Although described as a connecting rod 44, rod 44 may be any elongated member applied to any application. The elongated member 44 may be configured to rotate or may be stationary, albeit under a vibration mode that causes lateral deflection. Elongated members 44 that may benefit from use of the vibration damping device 46 may have an axial length over width (e.g., diameter) ratio of about greater than ten.

[0040] The vibration damping device 46 may be easily applied to pre-existing elongated members 44 without requiring design changes to the member. During assembly, the segments 50A, 50B of the split sleeve 50 are installed over the elongated member 44 generally from opposite radial directions. At least one of the springs 52A, 52B may then be installed about the sleeve 50. When placing the springs 52A, 52B, the portions 68 of the respective springs may be inserted into the respective grooves 70 of the collar 66.

[0041] While the present disclosure is described with reference to exemplary embodiments, it will be understood by those skilled in the art that various changes may be made and equivalents may be substituted without departing from the spirit and scope of the present disclosure. Further, while described in the context of a rotary wing aircraft having a single rotor, it is understood that aspects of the present disclosure may be used in coaxial or dual rotary wind aircraft, fixed wing aircraft, industrial machinery, maritime transmissions or the like without limitation. In addition, various modifications may be applied to adapt the teachings of the present disclosure to particular situations, applications, and/or materials, without departing from the essential scope thereof. The present disclosure is thus not limited to the particular examples disclosed herein, but includes all embodiments falling within the scope of the appended claims.

CLAIMS

What is claimed is:

1. A vibration damping device for reducing lateral displacement of an elongated member extending along a centerline, the vibration damping device comprising:

a split sleeve co-extending with and disposable about the elongated member; and

a first spring extending about the sleeve and configured to exert a force that biases the sleeve radially inward against the elongated member to react against lateral motion of the elongated member.

2. The vibration damping device set forth in claim 1, wherein the sleeve is bisected longitudinally into separate first and second segments.

3. The vibration damping device set forth in any of the preceding claims, wherein each of the first and second segments span circumferentially between opposite first and second edges, and wherein the first edge of the first segment opposes the second edge of the second segment and the second edge of the first segment opposes the first edge of the first segment.

4. The vibration damping device set forth in any of the preceding claims, wherein the first edge of the first segment and the second edge of the second segment define a first gap there-between when in an un-flexed state, and define a second gap that is larger than the first gap when in a flexed state against the biasing force of the first spring.

5. The vibration damping device set forth in any of the preceding claims, wherein the second edge of the first segment and the first edge of the second segment define a third gap there-between when in the un-flexed state, and define a fourth gap that is larger than the third gap when in the flexed state against the biasing force of the first spring.

6. The vibration damping device set forth in any of the preceding claims, wherein the first and second segments are geometrically identical.

7. The vibration damping device set forth in any of the preceding claims, wherein the first spring is a coiled spring constructed and arranged to helically wrap about the sleeve.

8. The vibration damping device set forth in claim 7 further comprising:

a second coiled spring including a plurality of coils with each coil extending circumferentially about the sleeve, and wherein each coil is axially adjacent to and spaced from a respective coil of a plurality of coils of the first spring.

9. The vibration damping device set forth in any of claims 7 and 8, wherein the first spring is disposed at least in part in a groove defined by the sleeve.

10. The vibration damping device set forth in claim 9, wherein the sleeve includes a collar projecting radially outward and the groove is defined by the collar.

11. The vibration damping device set forth in any of the preceding claims, wherein the vibration damping device is part of a drive system quill assembly, the elongated member is a connecting rod of the drive system quill assembly, and the centerline is a rotational axis.

12. A gear train comprising:

a first gear orientated to rotate about an axis;

a second gear orientated to rotate about the axis; and

a quill shaft assembly extending axially between the first and second gears, and including a quill shaft engaged to the first and second gears and including a plurality of segments, a connecting rod concentrically disposed inside the quill shaft and configured to hold the plurality of segments axially together, a split sleeve disposed about the connecting rod, and a first spring extending about the sleeve for exerting a force that biases the sleeve radially inward against the quill shaft for damping vibration of the quill shaft.

13. The gear train set forth in claim 12, wherein the rod is under tension and at least one segment of the plurality of segments of the quill shaft carries a torque.

14. The gear train set forth in any of claim 12 and 13, wherein the gear train is part of a split torque gear box.

15. An aircraft comprising the gear train set forth in claim 14.

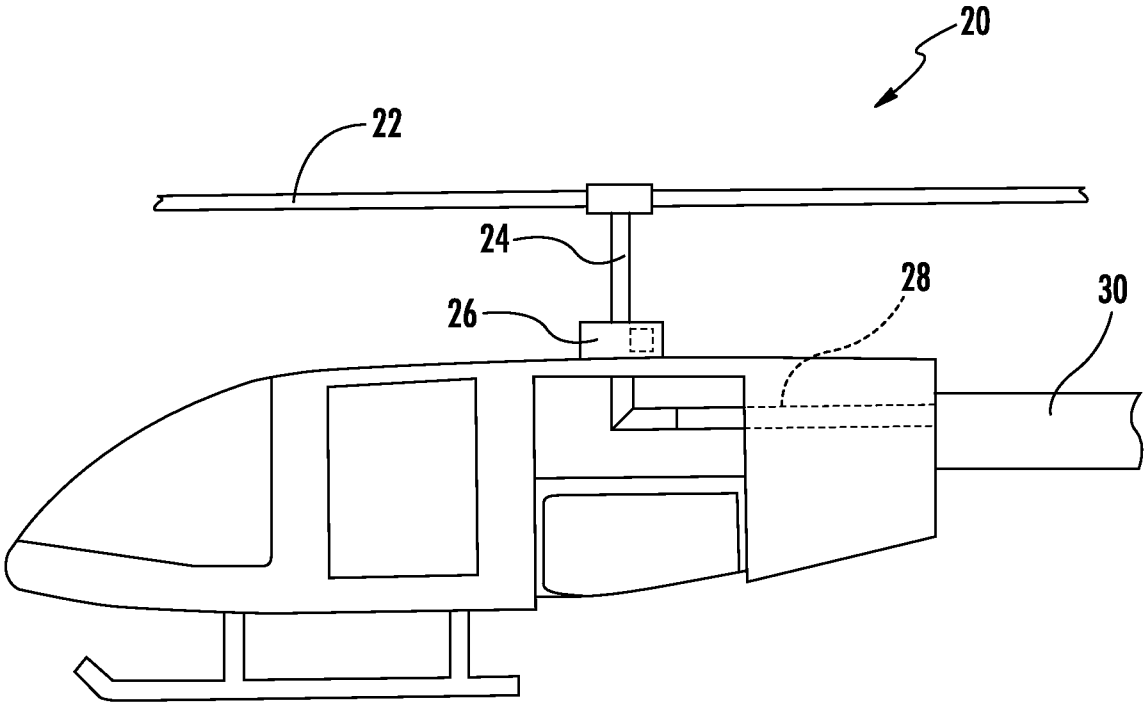

FIG. 1

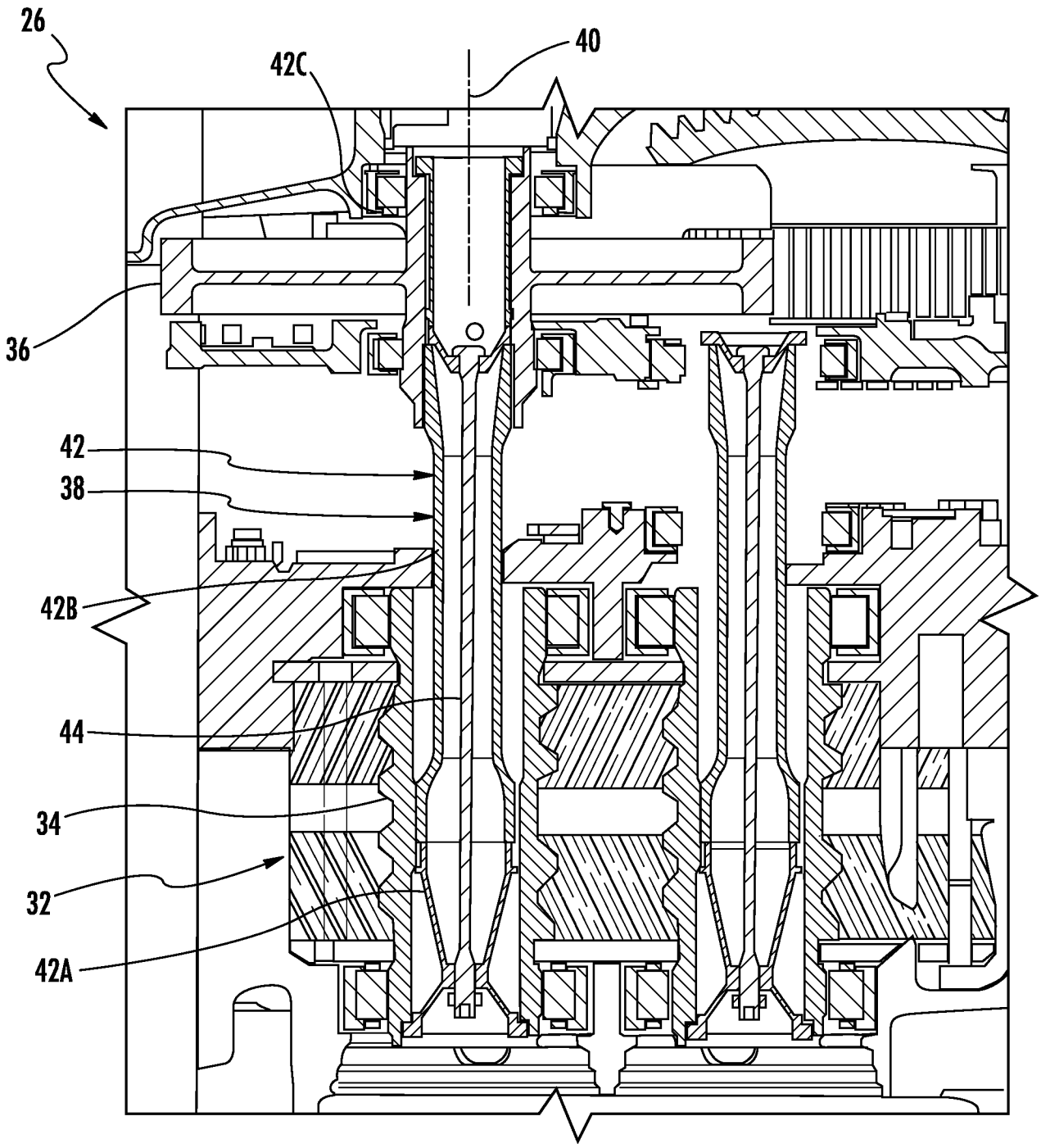

FIG. 2

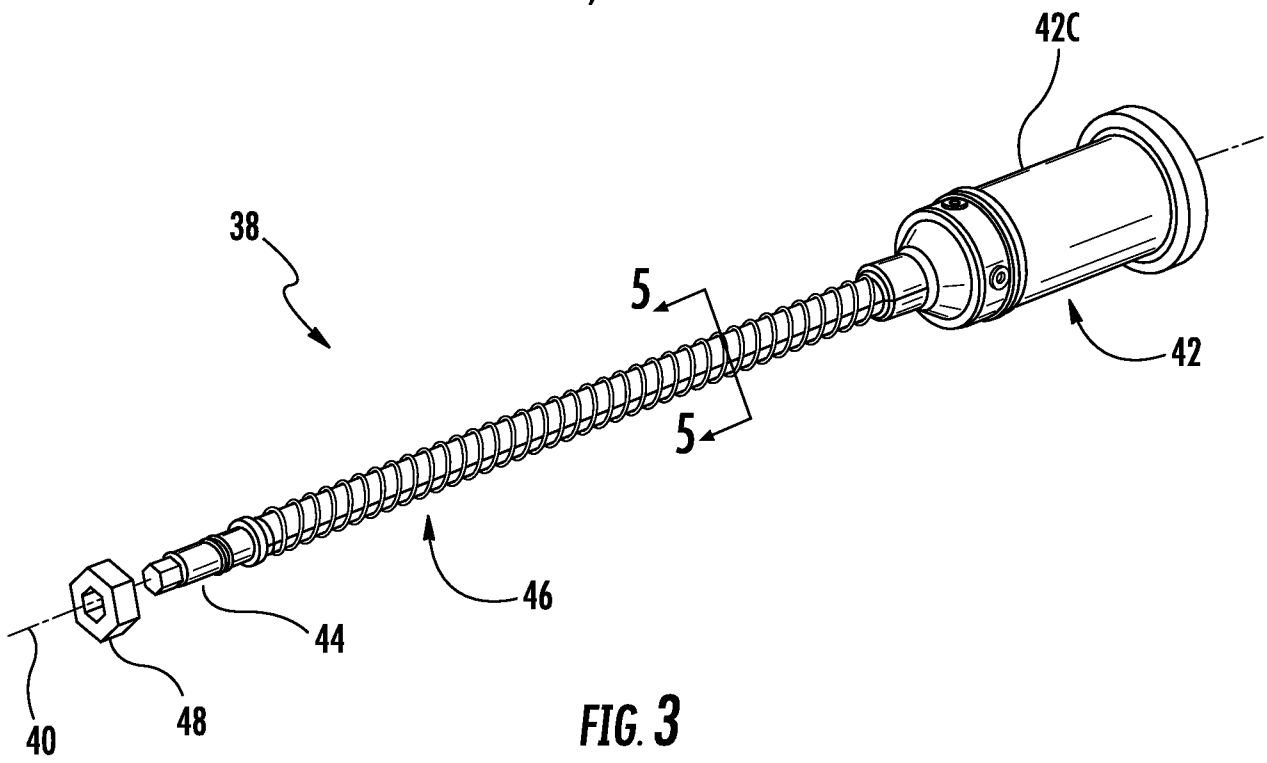
42C
38
5
5
42
46
44
40
48

FIG. 3

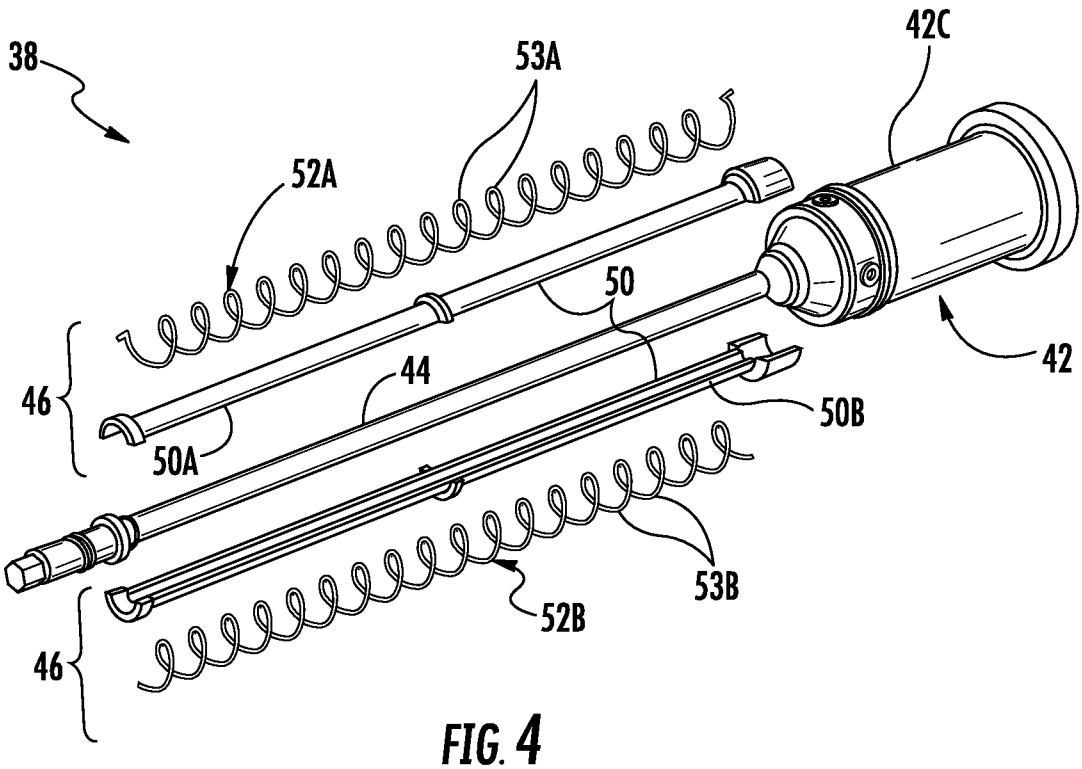
38
53A
42C
52A
50
42
46
44
50B
50A
53B
52B
46

FIG. 4

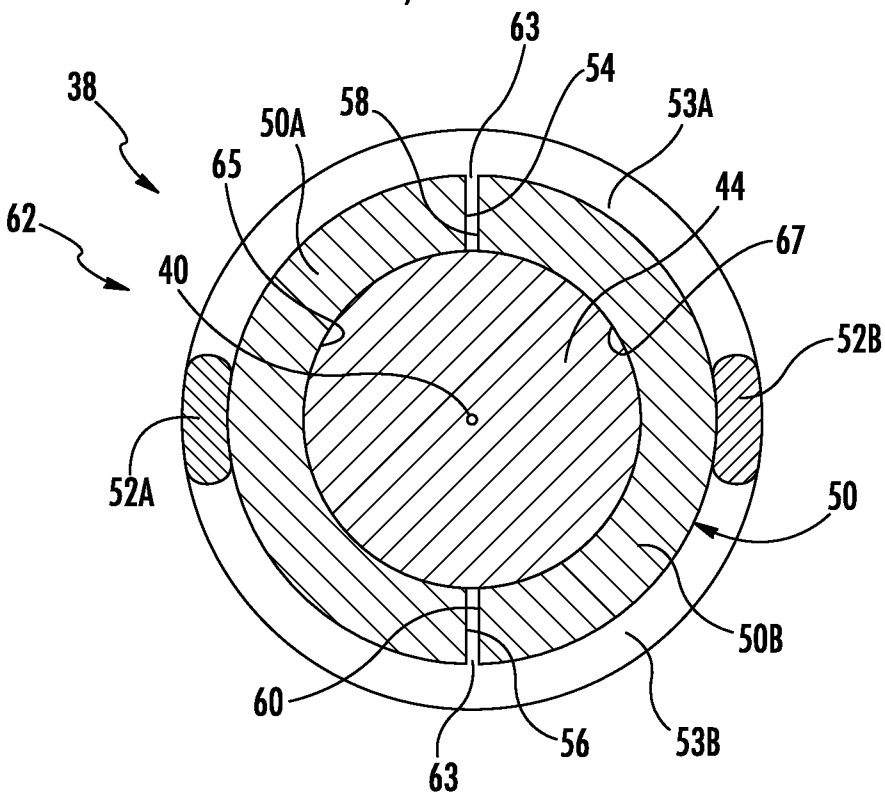
38
62
40
65
50A
58
63
54
53A
44
67
52B
50
52A
50B
60
56
53B
63

FIG. 5

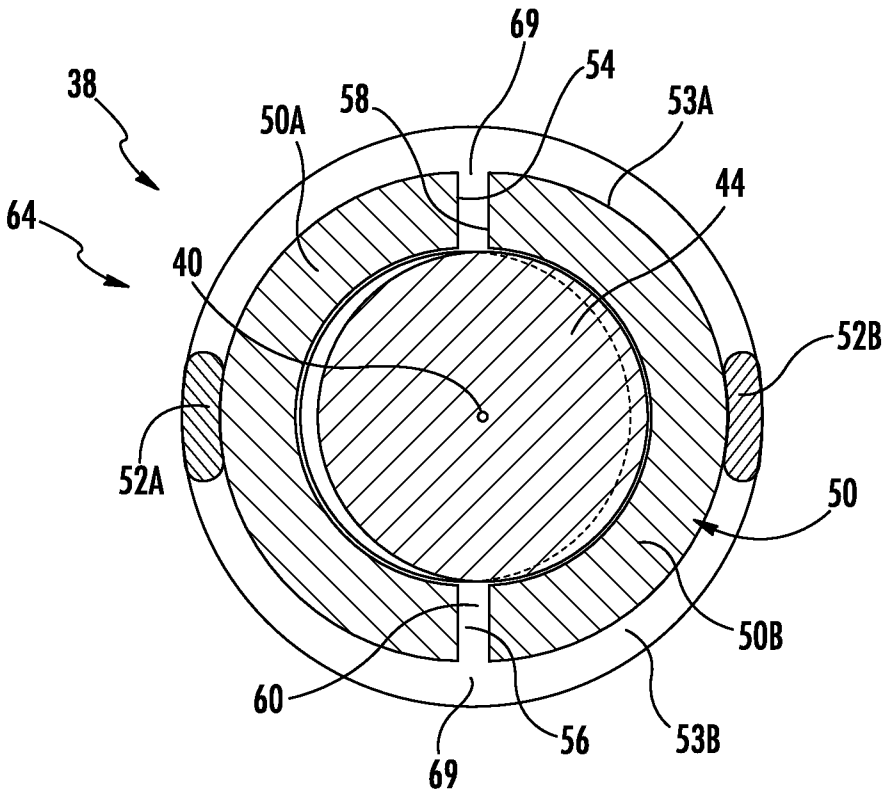
38
64
40
50A
58
69
54
53A
44
52B
50
52A
50B
60
56
53B
69

FIG. 6

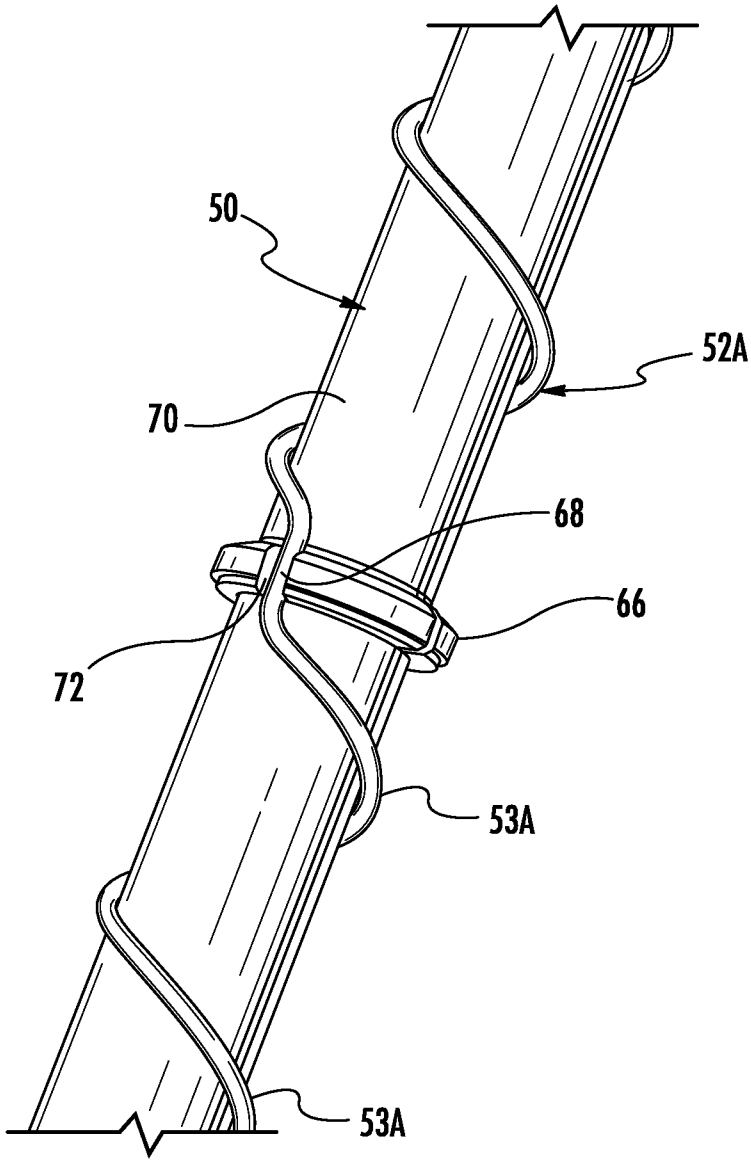

FIG. 7

INTERNATIONAL SEARCH REPORT

International application No.
PCT/US2016/037371

A. CLASSIFICATION OF SUBJECT MATTER
IPC(8) - F16F 15/10; F16C 27/00; F16F 15/12; F16F 15/121 (2016.01)
CPC - F16F 15/10; F16C 27/00; F16F 15/12; F16F 15/121 (2016.08)
According to International Patent Classification (IPC) or to both national classification and IPC

B. FIELDS SEARCHED

Minimum documentation searched (classification system followed by classification symbols)
IPC - F16C 27/00; F16F 15/10; F16F 15/12; F16F 15/121
CPC - F16C 27/00; F16F 15/10; F16F 15/12; F16F 15/121

Documentation searched other than minimum documentation to the extent that such documents are included in the fields searched
USPC - 74/411; 192/207; 192/212; 464/57; 464/61.1; 464/65.1; 464/81; 464/170; 464/180 (keyword delimited)

Electronic data base consulted during the international search (name of data base and, where practicable, search terms used)
Orbit, Google Patents, Google, YouTube
Search terms used: vibration, damper, elongated member, shaft, split, sleeve, spring, bias, gear train, quill shaft, connect, connector, connection, rod, radial, segments

C. DOCUMENTS CONSIDERED TO BE RELEVANT

Category*	Citation of document, with indication, where appropriate, of the relevant passages	Relevant to claim No.
A	US 5,145,143 A (JACKSON et al) 08 September 1992 (08.09.1992) entire document	1-3, 12-15
A	US 4,411,346 A (WITT) 25 October 1983 (25.10.1983) entire document	1-3, 12-15
A	US 5,354,237 A (AMBORN et al) 11 October 1994 (11.10.1994) entire document	1-3, 12-15
A	US 3,075,406 A (BUTLER, JR. et al) 29 January 1963 (29.01.1963) entire document	1-3, 12-15
A	US 6,725,985 B2 (HANEISHI et al) 27 April 2004 (27.04.2004) entire document	1-3, 12-15

☐ Further documents are listed in the continuation of Box C. ☐ See patent family annex.

* Special categories of cited documents:
"A" document defining the general state of the art which is not considered to be of particular relevance
"E" earlier application or patent but published on or after the international filing date
"L" document which may throw doubts on priority claim(s) or which is cited to establish the publication date of another citation or other special reason (as specified)
"O" document referring to an oral disclosure, use, exhibition or other means
"P" document published prior to the international filing date but later than the priority date claimed
"T" later document published after the international filing date or priority date and not in conflict with the application but cited to understand the principle or theory underlying the invention
"X" document of particular relevance; the claimed invention cannot be considered novel or cannot be considered to involve an inventive step when the document is taken alone
"Y" document of particular relevance; the claimed invention cannot be considered to involve an inventive step when the document is combined with one or more other such documents, such combination being obvious to a person skilled in the art
"&" document member of the same patent family

Date of the actual completion of the international search	Date of mailing of the international search report
11 August 2016	01 SEP 2016
Name and mailing address of the ISA/ Mail Stop PCT, Attn: ISA/US, Commissioner for Patents P.O. Box 1450, Alexandria, VA 22313-1450 Facsimile No. 571-273-8300	Authorized officer Blaine R. Copenheaver PCT Helpdesk: 571-272-4300 PCT OSP: 571-272-7774

INTERNATIONAL SEARCH REPORT

International application No.
PCT/US2016/037371

Box No. II Observations where certain claims were found unsearchable (Continuation of item 2 of first sheet)

This international search report has not been established in respect of certain claims under Article 17(2)(a) for the following reasons:

1. ☐ Claims Nos.:
because they relate to subject matter not required to be searched by this Authority, namely:

2. ☐ Claims Nos.:
because they relate to parts of the international application that do not comply with the prescribed requirements to such an extent that no meaningful international search can be carried out, specifically:

3. ☒ Claims Nos.: 4-11
because they are dependent claims and are not drafted in accordance with the second and third sentences of Rule 6.4(a).

Box No. III Observations where unity of invention is lacking (Continuation of item 3 of first sheet)

This International Searching Authority found multiple inventions in this international application, as follows:

1. ☐ As all required additional search fees were timely paid by the applicant, this international search report covers all searchable claims.

2. ☐ As all searchable claims could be searched without effort justifying additional fees, this Authority did not invite payment of additional fees.

3. ☐ As only some of the required additional search fees were timely paid by the applicant, this international search report covers only those claims for which fees were paid, specifically claims Nos.:

4. ☐ No required additional search fees were timely paid by the applicant. Consequently, this international search report is restricted to the invention first mentioned in the claims; it is covered by claims Nos.:

Remark on Protest

☐ The additional search fees were accompanied by the applicant's protest and, where applicable, the payment of a protest fee.

☐ The additional search fees were accompanied by the applicant's protest but the applicable protest fee was not paid within the time limit specified in the invitation.

☐ No protest accompanied the payment of additional search fees.