May 10, 1927. 1,628,001

R. SCHUR

VACUUM TUBE SOCKET

Filed Jan. 21, 1924

Fig. 1.

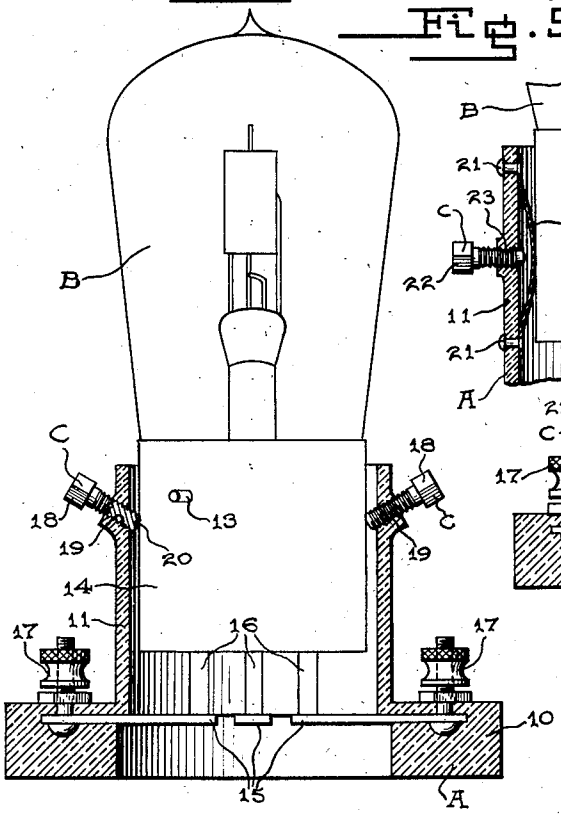

Fig. 5.

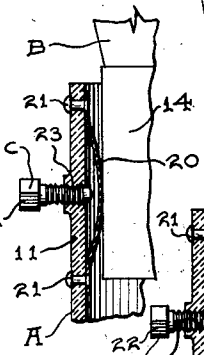

Fig. 3.

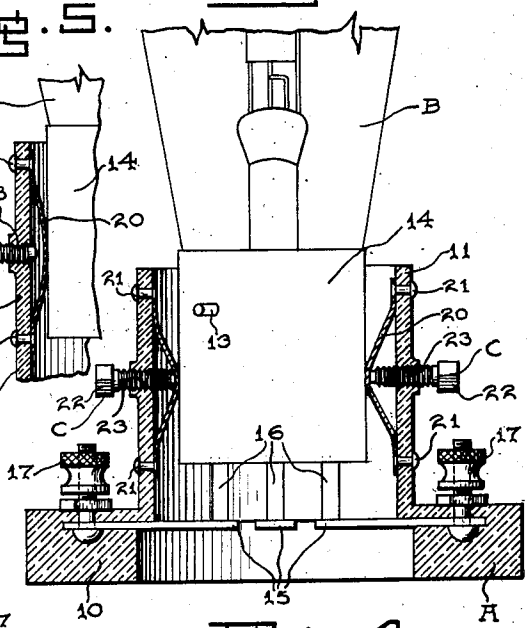

Fig. 4.

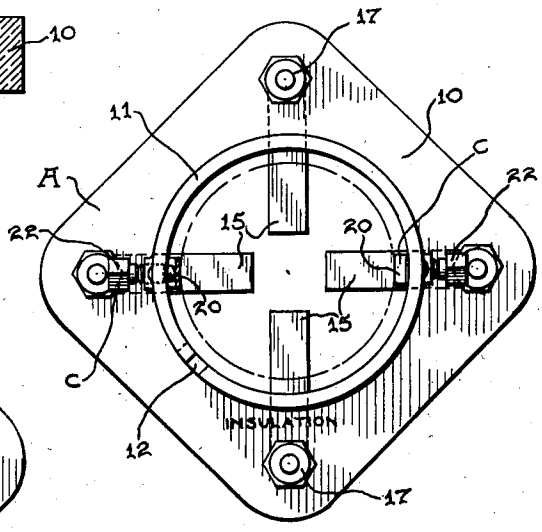

Fig. 2.

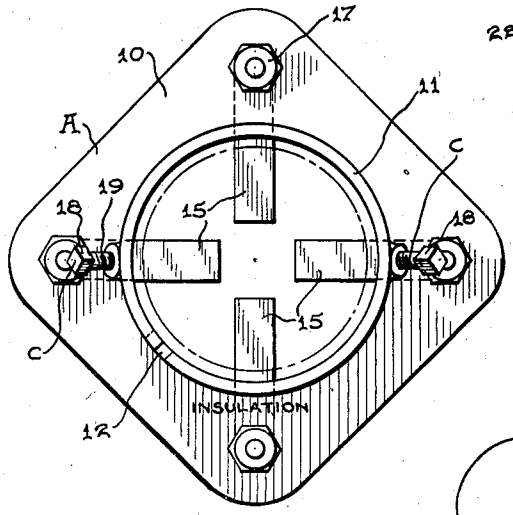

Inventor

Raymond Schur

By Lancaster and Allwine

Attorneys

Patented May 10, 1927. 1,628,001

UNITED STATES PATENT OFFICE.

RAYMOND SCHUR, OF CHICAGO, ILLINOIS.

VACUUM-TUBE SOCKET.

Application filed January 21, 1924. Serial No. 687,569.

My present invention relates to sockets and more particularly to that type of socket having a plurality of individual spring contact members adapted to be engaged by a plurality of conductors carried by the base of a vacuum tube or other electrical apparatus.

In the transmitting and receiving of wireless telegraph and telephone messages, when vacuum tubes or valves are used, it is the customary practice to have sockets to hold the tubes in place so as to keep them effectively connected to other parts in the circuit. This is usually accomplished by means of a peg carried by the base of the tube and fitting into a bayonet slot formed in the socket. It is obvious however, that no matter what the material of the socket is, there are numerous deficiencies in its make up as manufactured at present. If the tube does not fit snugly within the socket, the tube may be moved back and forth while in the socket so as to break contact with the contact arms of the socket on the side opposite to the peg of the tube. The tubes may also be rocked and thereby make a poor contact at one point which increases the resistance of the set and thereby results in a general decrease in efficiency. This making and breaking of the contacts quite frequently occurs when the set is jarred by any cause, or especially should the set be installed upon a motor vehicle or the like.

Therefore the primary object of the invention is to provide a socket having means for acting upon the base of a tube or the like for firmly holding the conductors thereof in effective engagement with contact members carried by the socket.

Another object of the invention is to provide sockets capable of receiving tube bases of various sizes, thereby eliminating the necessity of adaptors when desiring to use various sized tubes.

A further object of the invention is to provide a socket so constructed that the tube or its equivalent, which is inserted into the socket, will be held against movement within the socket and thereby maintain the maximum efficiency thereof.

Other objects of my invention will appear in the following detailed description, taken in connection with the accompanying drawing, forming a part of this specification, and in which drawing,

Figure 1 is a central vertical sectional view of my preferred form of socket and showing a vacuum tube held thereby.

Figure 2 is a top plan view of the type of socket as disclosed in Figure 1.

Figure 3 is a central vertical sectional view of a slightly modified form of socket and tube engaging element, and showing the tube held in position by means of a screw forcing an element into engagement therewith.

Figure 4 is a top plan view of the form of socket as shown in Figure 3.

Figure 5 is a fragmentary vertical section of the form as shown in Figure 3, and showing a tube held in place by means of the spring tension means alone.

Referring to the drawing in detail, wherein similar characters refer to similar parts throughout the views, A designates a socket adapted to receive a vacuum tube or other electrical apparatus B; said tube to be held in operative engagement within the socket A as by means C.

The socket A, which is preferably made of an insulating material, comprises a base 10 and a tubular socket portion 11 provided with the usual bayonet slot 12 for receiving the peg 13 carried by the base 14 of the tube A. The radially extending spring contact members 15 which are carried by the base 10, are adapted to be engaged by the contact prongs 16 of the tube A when the tube is inserted into the socket portion 11 for completing the circuits through the tube in the usual and well known manner. Any preferred type of binding post 17 may be employed for connecting a source of electrical energy to the contact members 15.

The form of securing means C, as shown in Figures 1 and 2, consists of set screws 18 which are arranged in diametrically disposed screw threaded openings 19 provided near the upper end of the socket portion 11. These set screws 18 are disposed with their axes converging inwardly and downwardly and have their inner ends cupped as at 20 for angular biting engagement with the outer wall of the tube base 14. It can be seen that when these set screws 18 are turned inwardly, they not only act to center the tube over the spring contact members 15, but also tend to force the tube downwardly and thereby press the prongs 16 into firm electrical contacting relation with members 15. If found desirable, an-

internally screw threaded bushing may be arranged in the openings 19 for receiving the set screws 18, and thereby preventing possible wear of the threads in the openings. While I have shown the securing means C as consisting of two diametrically disposed set screws disposed with their axes converging inwardly, it is to be understood that under varying conditions, that one, or any number of securing means may be employed, and that if desired the set screws may be disposed with their axes extending at a right angle to the major axis of the socket portion 11. As in the example shown, the set screws are formed with wrench heads, but if desired, the same may be slotted or knurled for permitting of the easy turning thereof.

In the form of securing means as shown in Figures 3, 4 and 5, strips of flexible material 20 which extend longitudinally of the socket portion 11, have their ends secured to the inner wall of the socket portion as by rivets 21. These strips 20 are positioned diametrically opposite one another and have their arcuate portions extending into the socket portion 11 to be engaged by the outer wall of the base 14 when the tube is inserted into the socket. When a tube having a relatively small base is inserted into the socket, as shown in Figures 3 and 4, set screws 22 which turn in screw threaded openings 23 provided in the socket portion 11, may be fed inwardly for forcing the flexible strips 20 into binding engagement with the base 11 for centering the same and preventing lateral movement of the tube. These set screws 22 are positioned diametrically opposite one another beneath the flexible strips 20, and preferably have their axes extending at a right angle to the axis of the socket portion 11. It can be seen that by movement of the set screws 22, that the prongs 16 of the tube B may be centered over the spring contact members 15 and also held in contacting relation therewith. Referring to Figure 5, should the diameter of the base 14 be of slightly less diameter than the inner diameter of the socket portion 11, the flexible strip 20 will suffice for holding the tube in its proper position with respect to the socket.

If desired, an expansible coil spring may be positioned between the strips 20 and the inner wall of the socket portion 11 for forcing the strips into holding engagement with the tube base 14.

It will be observed that an efficient socket for the reception of an audion tube has been provided whereby the objectional features of poor contacting relation between the tube terminals and the base terminals has been eliminated.

Various minor changes may be made as to material and disposition of the various elements without departing from the spirit or scope of the invention; but,

I claim:

1. A socket for audion tubes comprising a base and a socket portion, individual contact members carried by the base and extending into the socket portion, and a member threaded into the socket portion and engaging the tube base for firmly forcing a plurality of conductors carried by the tube base in effective engagement with said contact members.

2. A socket for audion tubes comprising a base and a socket portion, individual contact members carried by the base and extending into the socket portion, and means disposed diametrically of the socket portion adapted for centering the tube within the socket portion and for firmly forcing the tube in effective engagement with the contact members.

3. A socket for audion tubes comprising a base and a socket portion, individual contact members carried by the base and extending into the socket portion, and a set screw threaded into the socket portion and adapted to engage the base of the tube at an acute angle to the axis of the socket portion for firmly forcing a plurality of conductors carried by the base of the tube in effective engagement with said spring contact members.

4. A socket for audion tubes comprising a base and a socket portion, spring contact members carried by the base and extending into the socket portion, and set screws disposed diametrically of the socket portion and having their axes converging inwardly and downwardly, adapted to engage the base of the tube for centering the tube within the socket portion, and for firmly forcing contact prongs carried by the tube base in engagement with said spring contact members.

RAYMOND SCHUR.