June 2, 1936. H. C. RENTSCHLER ET AL 2,042,963

ULTRA VIOLET LAMP

Filed Oct. 15, 1930

Fig. 1.

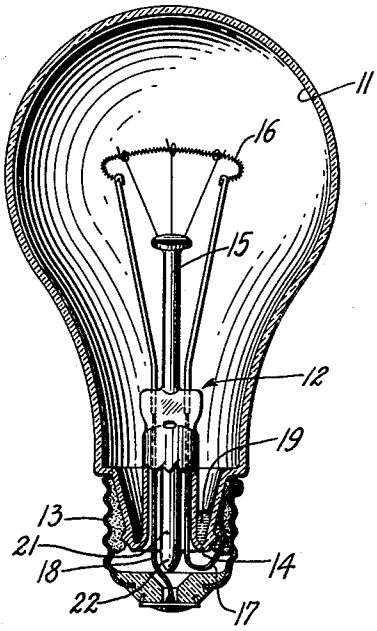

Fig. 2.

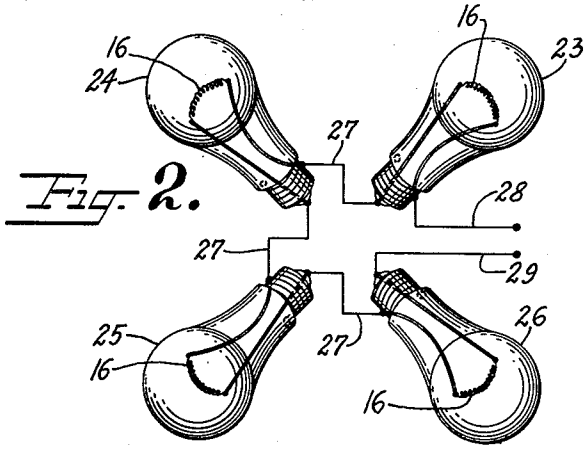

Fig. 4.

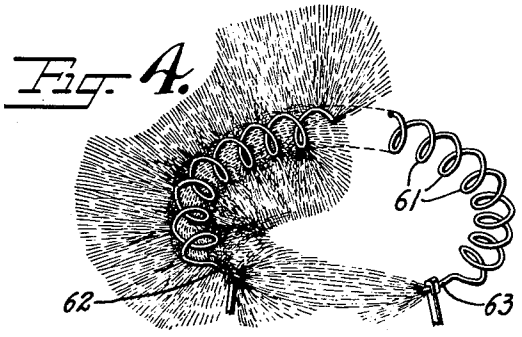

Fig. 3.

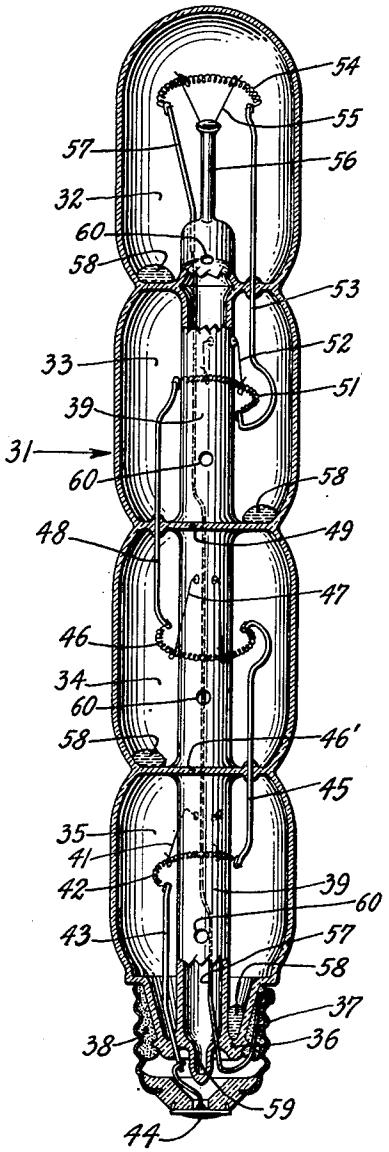

INVENTORS
H. C. RENTSCHLER
J. W. MARDEN
BY M. F. Rego
ATTORNEY

Patented June 2, 1936

2,042,963

UNITED STATES PATENT OFFICE

2,042,963

ULTRAVIOLET LAMP

Harvey C. Rentschler and John W. Marden, East Orange, N. J., assignors to Westinghouse Lamp Company, a corporation of Pennsylvania

Application October 15, 1930, Serial No. 488,774

3 Claims. (Cl. 176—1)

This invention relates to a lamp for the production of ultraviolet radiations and relates more particularly to a gaseous conduction lamp of the negative glow type for producing a source of ultraviolet light.

It has long been recognized that ultraviolet radiations are beneficial. Many devices have been made for producing large amounts of ultraviolet light which must be used with extreme care and in accordance with specified instructions from those versed in the use of ultraviolet radiations. When employing ultraviolet lamps as for example those of the type used in therapy and for other treatments, it is important that overdoses be avoided since considerable personal harm can result.

It is recognized, however, that it is of advantage to supply rooms, as for example, rooms of dwellings with a mild source of ultraviolet light and that the same has a beneficial effect from a purification or hygenic standpoint and in supplying at least an approach to the beneficial effect of sunlight in rooms where it is impossible to provide for the admittance of sunlight directly.

Although the benefits which result from mild sources of ultraviolet light are known, considerable difficulty has been experienced in providing a simple and effective unit which would produce ultraviolet radiations. In order to make such source of light practical the means must necessarily be of a simple construction and relatively low in cost.

It is an object of the present invention therefore to provide a simple and effective ultraviolet light giving unit.

Another object of the invention is to provide a mild source of ultraviolet light which may be applied directly to commercial line voltages.

Another object of the invention is to provide an ultraviolet light giving unit of a construction approaching in simplicity that of the ordinary incandescent electric lamp.

Other objects and advantages of the invention will be apparent as the description proceeds.

It has been found that an electrical device capable of giving a mild form of ultraviolet may be obtained by using a coiled tungsten filament in a sealed envelope containing mercury vapor. For example a regular 110 or 115 volt lamp having say a 100 watt filament may be provided with a mercury atmosphere and a glow discharge will occur between the filament ends and between the spaced turns of the helically formed filament. The amount of glow obtained has been found to be sufficient where a mild source of ultraviolet light is required. Difficulty was encountered, however, in avoiding sputtering and the bulb became coated with particles of the disintegrated filament and blackened the bulb and obviously prevented the effective transmission of the ultraviolet radiations.

We have found, however, that a unit for producing a desirable source of ultraviolet light operable on commercial lighting circuits may be had by dividing a coiled filament into sections connected in series. Each section being independent of the other by enclosing in individual sealed envelopes containing mercury vapor and in having the total voltage of the several filaments equal to the line voltage.

For example when providing a unit in accordance with the present invention, a coiled 100 watt tungsten filament may be used. This filament may be divided into four sections each of from 14.5 to 15.5 mm. in length and passing a current of .71 to .74 ampere. The coiled sections may be wound on a 13 mil. mandrel and may have a weight of 13.1 mg. If the unit is to have five sections each section may be about 11.5 mm. in length passing a current of about .74 ampere.

Each section may be enclosed in an envelope of ultraviolet light transmitting material such as a glass known under the trade name of Corex.

A quantity of mercury may be placed in each bulb, for example, the device may be provided with from one to three millimeters of mercury after sealing off and the several bulbs may have the leading in conductors connected to each other in series and to a source of electrical energy.

Examples of a structure selected to show a practical embodiment of the invention is shown in the drawing in which,

Fig. 1 is a vertical sectional view of a lamp bulb and base having a coiled filament and a quantity of mercury to provide mercury vapor to produce a glow discharge.

Fig. 2 shows a plurality of lamps in diagram; each lamp having a filament connected in series and capable of being applied to a suitable four way socket.

Fig. 3 shows a unit in which four filaments are enclosed in separate bulbs, the bulbs being consolidated to constitute an integral lamp.

Fig. 4 is an enlarged perspective view of a coiled filament and indicates the action of the discharge which occurs between the ends of the filament and between the turns of the coil.

As above mentioned a lamp constructed in accordance with the present invention may be generally the same as the ordinary incandescent lamp

and may comprise a bulb 11 having the usual mount 12 and base 13. The mount 12 may be sealed in the bulb at 14 and may be provided with an arbor 15 having a coiled filament 16 mounted thereon with its terminals connected to leading in wires 17 and 18.

The bulb may be provided with the usual exhaust tube 21 through which a quantity of mercury 19 may be deposited in the bulb after which the bulb may be sealed by tipping off at 22 in the usual manner. As shown diagrammatically in Fig. 2, four bulbs 23, 24, 25 and 26 are disposed for connection in series with conductors 27, 28 and 29 leading to a commercial line voltage as for example 115 volts. The bulbs are each provided with a filament 16. These filaments may, as above mentioned be of such length and voltage that their combined length will equal a given wattage and voltage thus making them operable on the commercial 115 volt line.

The several bulbs or glow devices shown in Fig. 2 may be provided with a four way socket adapted to connect with a lighting circuit in the usual manner and the bulbs may readily and conveniently be applied to the socket for use in living rooms or places where a mild form of ultraviolet light is desirable.

The unit 31 shown in Fig. 3 may comprise a plurality of glass compartments 32, 33, 34 and 35. The end compartment 32 may be closed and the end compartment 35 may be provided with a closed end 36 to which a base 37 is secured in the usual manner as by cement 38.

The end 36 may be sealed to a central hollow pillar 39 which extends through compartments 33, 34 and 35 and from which support wires extend and support a filament. In compartment 35 support wires 41 support a filament 42 of which one of the terminals of the filament 42 is connected to a leading in conductor 43 connected to a central contact 44 in the base 37. The opposite terminal of the filament 42 is connected to one end of a conductor 45 passing through a dividing wall 46' which separates compartment 34 from compartment 35. The opposite end of the conductor 45 is connected to one end of a filament 46 supported in the compartment 34 by support wires 47 extending from the pillar 39. The opposite end of the filament 46 is connected with one end of a conductor 48 extending through a wall 49 which divides compartment 33 from compartment 34.

The other end of the conductor 48 is connected to one end of a filament 51 mounted on support wires 52 extending from the pillar 39 in compartment 33. The other end of the filament 51 is connected with one end of a conductor 53 connected to one end of a filament 54 supported on support wires 55 extending from an arbor 56 extending from the pillar 39. The other end of the filament 54 is connected to a leading in conductor 57 which extends through the pillar 39 and the several compartments and is connected with the shell of the base 37 in the usual manner.

From the above it will be evident that the filaments 42, 46, 51 and 54 are connected in series although each is enclosed in a separate compartment to confine the glow which occurs upon the flow of electrical energy through the filaments. Each of the compartments may be provided with a quantity of mercury 58 to provide a mercury vapor atmosphere within the device. The entire device may be evacuated through an exhaust tube 59 which communicates with the interior of the pillar 39 and exhaust apertures 60 are provided in the pillar in each compartment for exhausting purpose.

Devices constructed in accordance with the present invention may be provided with filaments having thereon a coating of an electron emission material such as a suitable oxide which may be rendered thermionically active. The filament may, as shown in Fig. 4, be of the helical coiled type having the turns 61 suitably spaced so that the ionization will not only take place between the terminals 62 and 63 but between the turns give an effective and efficient operation in the production of a glow discharge to produce ultraviolet radiations.

With a device of the present character, in which a filament is employed giving a source of electrons, a discharge occurs when a quantity of mercury is disposed in the bulb, since at room temperature sufficient mercury vapor is present, particularly in a small-sized bulb with short distances separating the points between which the discharge occurs. It will be understood that the gas pressure, voltage and spacing are so selected as to make the breakdown voltage per unit of length in the gas smaller than the voltage drop per unit of length of the filament.

It will be readily appreciated that the present device makes it possible to provide living rooms, lecture halls, or other places which may be remote from sunlight, with a beneficial source of ultraviolet approaching the healthful action of sunlight.

Owing to the present arrangement the device has the hereinbefore mentioned advantage of being applicable to the usual commercial lighting circuit and may be used wherever sockets are provided for the standard incandescent electric lamp.

Although a preferred embodiment of the invention may be shown and described herein it is to be understood that modifications may be made therein without departing from the spirit and scope of the invention as set forth in the appended claims.

What is claimed is:

1. An ultraviolet lamp for operation on an electrical circuit of a given voltage, comprising a plurality of filaments connected in series and operable together at a given wattage and at a total voltage equal to said given voltage, an ionizable medium surrounding each filament to provide a glow discharge when the filament is heated to emissivity and a separate chamber for each filament whereby each filament operates to produce two sources of illumination at low voltage operation and giving a relatively high wattage lighting unit free from sputtering, said chambers having communicating apertures.

2. An ultraviolet lamp for operation on an electrical circuit of a given voltage comprising a plurality of filaments connected in series and operable together at a given wattage and at a total voltage equal to said given voltage, an ionizable medium surrounding each filament to provide a glow discharge when the filament is heated to emissivity and communicating chambers, each filament being disposed in a separate chamber whereby each filament operates to produce two sources of illumination at low voltage operation and providing a relatively high wattage lighting discharge lamp free from sputtering and a tubular member extending through and affording communication between the chambers.

3. An ultraviolet lamp for operation on an electrical circuit of a given voltage, comprising a plurality of filaments connected in series and operable together at a given wattage and at a total voltage equal to said given voltage, mercury vapor surrounding each filament to provide ultraviolet light when the filament is heated to electron emissive temperature, and a separate chamber for each filament, whereby each filament operates to produce ultraviolet light at low voltage operation and giving a relatively high wattage ultraviolet light source free from sputtering, a tubular member extending through and affording communication between the chambers and means carried by said member for supporting said filaments.

HARVEY C. RENTSCHLER.
JOHN W. MARDEN.