April 18, 1950 W. C. MILLER ET AL 2,504,214

LIVESTOCK SEPARATOR

Filed Jan. 27, 1947 2 Sheets-Sheet 1

Fig. 1.

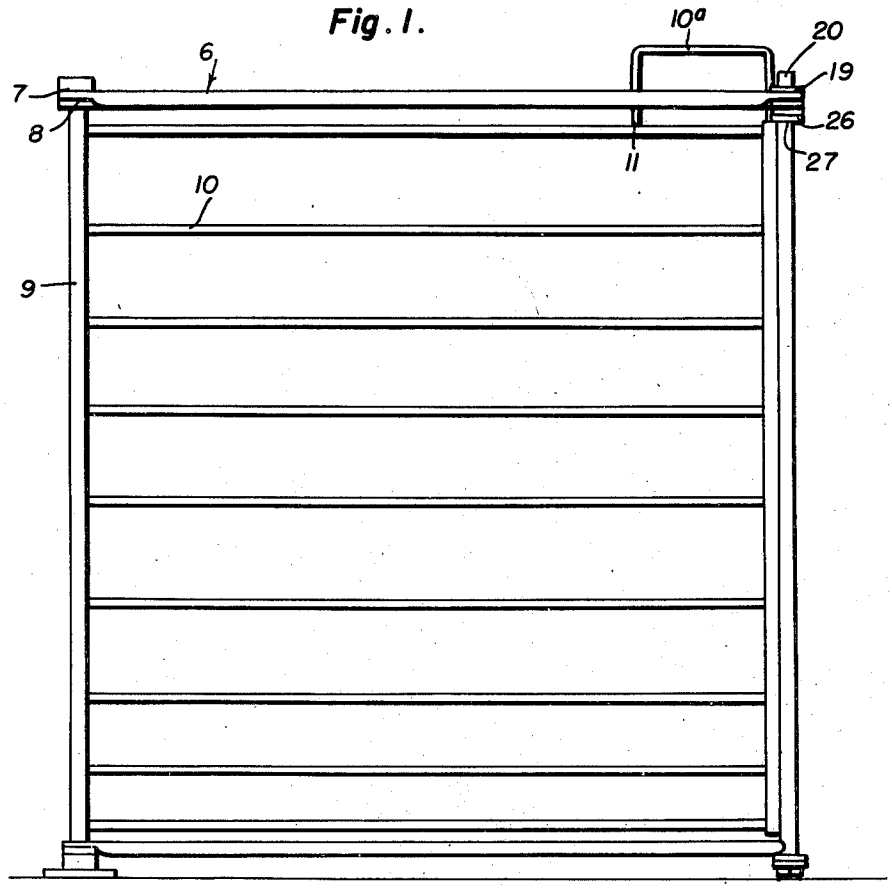

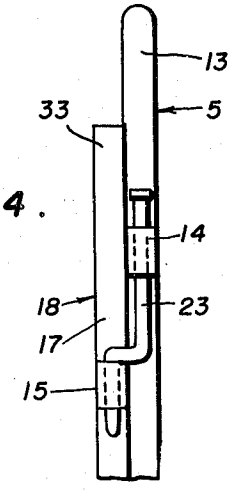

Fig. 4.

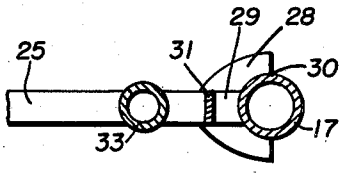

Fig. 5.

Inventor

William C. Miller
Walter F. Arnett

By Clarence A. O'Brien and Harvey B. Jacobson
Attorneys

April 18, 1950 W. C. MILLER ET AL 2,504,214

LIVESTOCK SEPARATOR

Filed Jan. 27, 1947 2 Sheets-Sheet 2

Fig. 2.

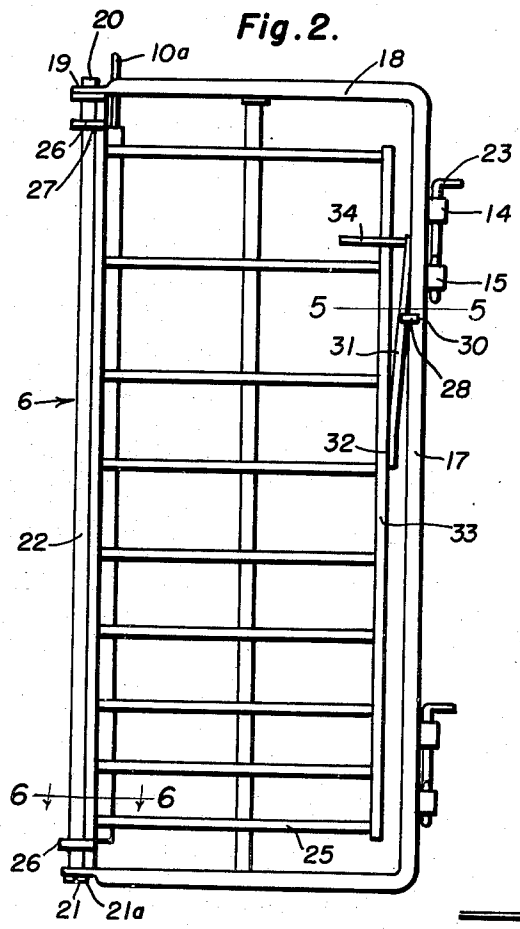

Fig. 3.

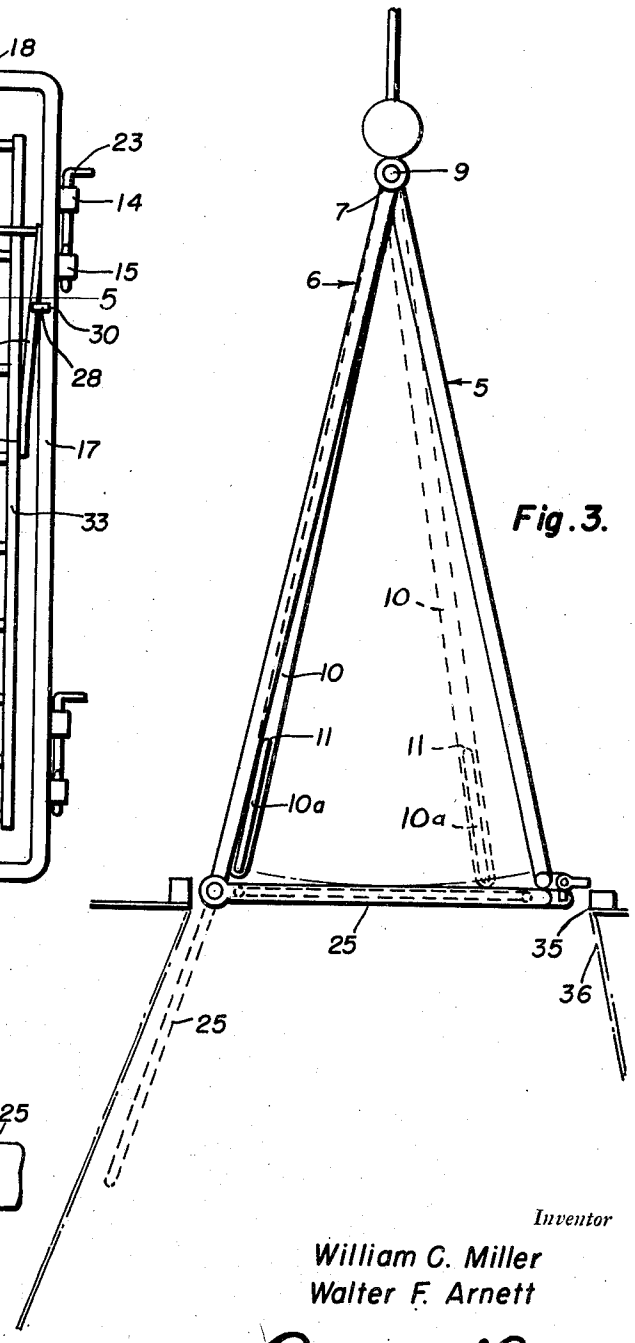

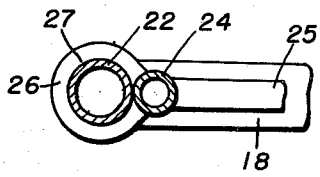

Fig. 6.

Inventor

William C. Miller
Walter F. Arnett

By Clarence A. O'Brien and Harvey B. Jacobson

Attorneys

Patented Apr. 18, 1950 2,504,214

UNITED STATES PATENT OFFICE

2,504,214

LIVESTOCK SEPARATOR

William C. Miller, Fluvanna, and Walter F. Arnett, Snyder, Tex.

Application January 27, 1947, Serial No. 724,610

2 Claims. (Cl. 119—155)

1

This invention relates to new and useful improvements in livestock separators and more particularly to a device adapted to provide means for the separation into their various kinds or qualities of livestock while being quickly transferred from one enclosure to another.

The primary object of the present invention is to provide a separating gate commonly referred to as a "cutting gate" for livestock that is portable thereby permitting the device to be installed at the portion of the ranch where the stock is located rather than driving the stock through the stationary corrals, usually located at the headquarters, and in most instances, several miles from the place where the stock desired to be worked is located.

Another important feature of this invention is to provide a separating gate for live-stock quickly and easily installed for operation at the corrals, with a minimum of time and labor.

A further feature of this invention is to provide a device of the class described that requires only two men for operating same for the separation of livestock whereas other devices require more than two operators.

A still further feature of the present invention is to provide a device of the character referred to that is light and durable in construction, simple and practical in operation, relatively inexpensive to manufacture and otherwise well adapted for the purposes for which the same is intended.

Other objects and advantages reside in the details of construction and operation as more fully hereinafter described and claimed, reference being had to the accompanying drawings forming part hereof, wherein like numerals refer to like parts throughout, and in which:

Figure 1 is a side elevational view of the improved stock separator constructed in accordance with the present invention.

Figure 2 is a front elevational view thereof.

Figure 3 is a top plan view with dotted lines showing the opened and closed position of the front gate.

Figure 4 is an enlarged fragmentary view showing one of the hinges at the upper corners of the stock separator.

Figure 5 is an enlarged sectional view taken on line 5—5 of Figure 2.

Figure 6 is an enlarged sectional view taken on line 6—6 of Figure 2.

Referring now to the drawings in detail, wherein for the purpose of illustration, we have disclosed a preferred embodiment of the present invention, the numerals 5 and 6 represent a pair

2

of substantially U-shaped vertically positioned frames whose outer ends are formed into eyes 7 which overlie each other and are loosely connected as at 8 to one vertical end 9 of a baffle gate 10 adapted for horizontal swinging movement between frames 5 and 6 to selectively open and close the openings in said frames. The frames 5 and 6 diverge from the end 9 of the baffle gate.

A substantially inverted U-shaped handle 10a suitably secured as at 11 to the upper horizontal portion of said baffle gate provides a means to impart an easy swinging motion to said gate.

Suitably secured to the vertical arm 13 of frame 5 is a hinge eye 14 and a second hinge eye 15 is secured to the vertical arm 17 of a front U-shaped frame 18 comprising the forward entrance for the device. A pin 23 connects the eyes 14 and 15 for detachably connecting the frame 18 to the frame 5.

The outer eye ends 19 of frame 18 are pivotally connected on the respective upper and lower ends 20 and 21 of the vertical arm 22 of frame 6, said ends 20 and 21 projecting above and below said frame 6, and the end 21 is secured to the lower end of frame 6 by a nut 21a threaded thereon.

One vertical end 24 of a rectangular front gate 25 is formed at its upper and lower ends with outwardly turned eyes 26 which are journalled as at 27 on the vertical arm 22 of frame 6 for pivotally horizontal movement of said gate 25 to function in opening and closing the opening in frame 18 comprising the forward entrance through the device.

A horizontal latch keeper plate 28 having a notch 29 is secured as at 30 to the vertical arm 17 of the front frame 18 and said notch is adapted to receive a resilient latch arm 31 having one end secured as at 32 to the free vertical end 33 of the front gate 25. The upper end of said arm 31 is formed into a horizontal latch release bar 34.

The device being installed, as previously described, at an opening 35 in a fence 36 it is only necessary to open gate 25 to permit stock to pass through the front entrance and by swinging baffle gate 10 back and forth between frames 5 and 6 the livestock may be separated, one kind allowed to pass through frame 5 into one corral and another kind is permitted to pass through frame 6 into an adjoining corral.

In this manner only two men are necessary in separating livestock, one man operating the front gate and the other man operating the

baffle gate or one man can operate both gates.

In order to collapse the device for transporting to various points for use or for shipment it is merely necessary to remove hinge pins 23 from the hinge eyes 14 and 15 and the front frame 18 and front gate 25 are swung outwardly against frame 6 and frame 5 is placed against the opposite side of frame 6 with baffle gate 10 resting between frames 5 and 6.

In view of the foregoing description taken in conjunction with the accompanying drawings it is believed that a clear understanding of the construction, operation and advantages of the device will be quite apparent to those skilled in this art. A more detailed description is accordingly deemed unnecessary.

It is to be understood, however, that even though there is herein shown and described a preferred embodiment of the invention the same is susceptible to certain changes fully comprehended by the spirit of the invention as herein described and the scope of the appended claims.

We claim:

1. A portable livestock separator of the class described comprising an upstanding frame of triangular shape in plan to provide a pair of side frame members and a front frame member, means hingedly connecting the rear ends of the side frame members to each other for horizontal collapsing movement, means pivotally connecting the front end of one of the side frame members to one side of the front frame member for collapsing movement against the side frame members, means detachably securing the other side of the front frame member to the front end of the other of said side frame members in an erected position, said side frame members providing side openings and said front frame member providing a front opening, a separating closure swingably mounted at the rear ends of the side frame members for selectively closing the side openings, and a front closure swingably mounted at the pivoted side of the front frame member for closing the front opening.

2. A portable collapsible livestock separator comprising an upstanding frame of triangular shape in plan and composed of a pair of side frame members forming a pair of side openings and a front frame member forming a front opening, means connecting the frame members to each other for collapsing movement one against the other, a closure hinged at its rear edge to the rear ends of the side frame members for swinging from side to side to oppositely open and close said side openings, and a closure swingably mounted in said front frame to close the front opening.

WILLIAM C. MILLER.
WALTER F. ARNETT.

REFERENCES CITED

The following references are of record in the file of this patent:

UNITED STATES PATENTS

Number	Name	Date
182,688	Minor	Sept. 26, 1876
212,807	Loudon	Mar. 4, 1879
292,510	Rogers	Jan. 29, 1884
654,190	Thompson	July 24, 1900