A. B. POPOSKEY.

ATTACHMENT FOR MUSICAL INSTRUMENTS.

APPLICATION FILED APR. 17, 1915.

1,170,325. Patented Feb. 1, 1916.

Fig. 1.

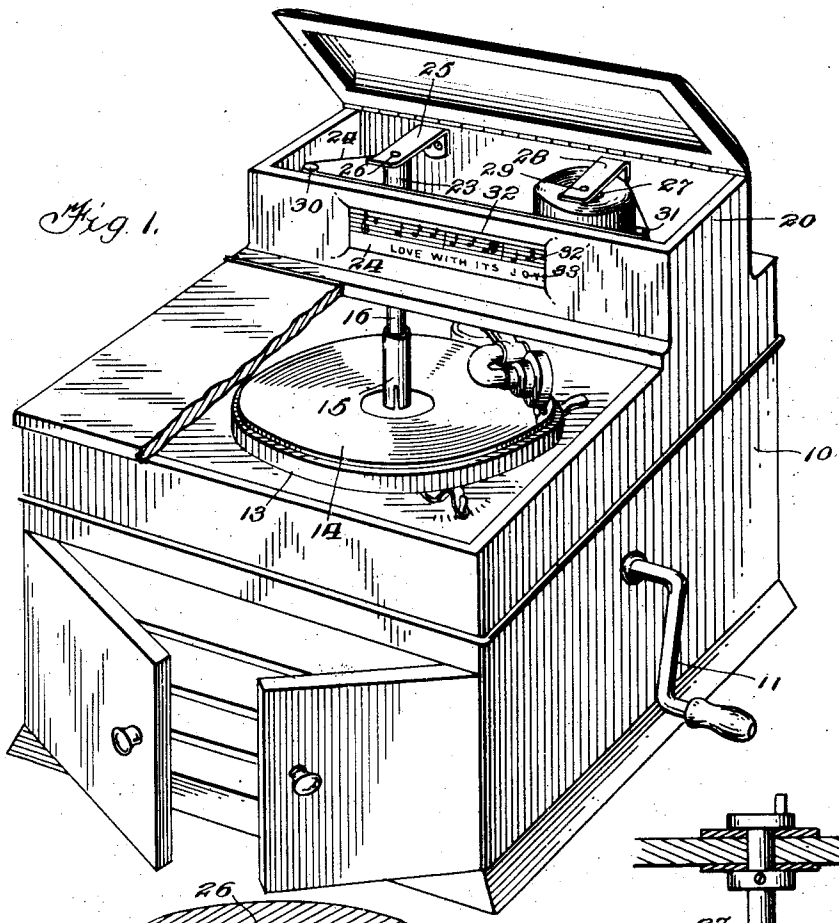

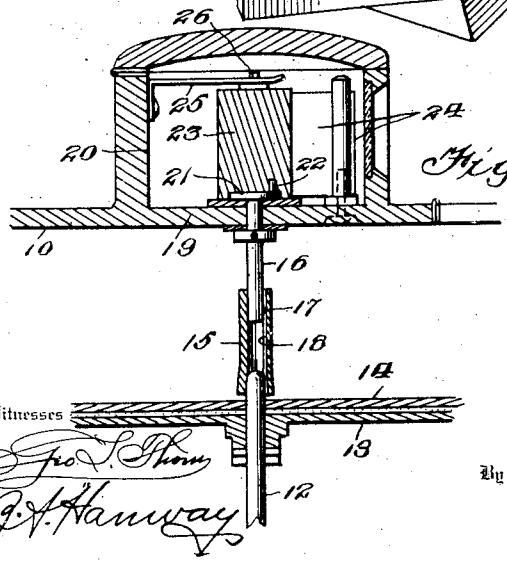

Fig. 2.

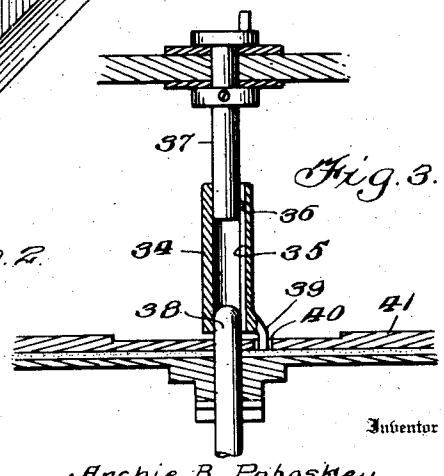

Fig. 3.

Witnesses

Geo. L. Thom

R. F. Hanway

Inventor

Archie B. Poposkey

By Mason Fenwick & Lawrence,

Attorneys

UNITED STATES PATENT OFFICE.

ARCHIE B. POPOSKEY, OF NEW YORK, N. Y.

ATTACHMENT FOR MUSICAL INSTRUMENTS.

1,170,325. Specification of Letters Patent. Patented Feb. 1, 1916.

Application filed April 17, 1915. Serial No. 22,150.

To all whom it may concern:

Be it known that I, ARCHIE B. POPOSKEY, a citizen of the United States, residing at New York, in the county of New York and State of New York, have invented certain new and useful Improvements in Attachments for Musical Instruments; and I do hereby declare the following to be a full, clear, and exact description of the invention, such as will enable others skilled in the art to which it appertains to make and use the same.

This invention relates to attachments for musical instruments and the like and more particularly to an attachment for indicating a musical staff with words, moving scenes or any desired substitute therefor.

It has for an object to utilize mechanical movement from a musical instrument for imparting movement to a tape or its equivalent.

A further object of this invention is the provision of a simplified means for removably supporting said tape.

A further object of this invention is the provision of means for removably attaching a tape mechanism to a movable part of the musical instrument.

A further object of this invention is the provision of a means for moving a tape bearing a musical staff and words in synchronism with the musical record so that as the musical record is being played, the tape is moved to show the music and words of said record.

Further objects will be apparent from the following specification, appended claims and drawings thereof, in which—

Figure 1 is a perspective view of a musical instrument showing the device attached thereto, Fig. 2 is a vertical sectional view showing the operative mechanism for said tape and Fig. 3 is a similar view showing a modified form.

This invention is shown applied to a phonograph but it is understood that it may likewise be applied to any mechanical musical instrument with slight modifications in the connecting and driving mechanism.

Referring to the drawings, there are shown certain elements comprising a talking machine in which 10 indicates the cabinet having the winding crank 11, rotatable spindle 12 and turntable 13 upon which a record 14 may be placed. The spindle 12 extends above the record 14 where it receives the lower end of a sleeve 15 in binding engagement therewith and this sleeve is slidable on the shaft 16 but imparts movement to said shaft from said spindle through a pin 17 and slot 18 formed on the shaft and in the sleeve respectively. The shaft 16 passes through the floor 19 of a housing 20 and said shaft has a head 21 formed thereon from which a pin 22 rises so that said head and pin engage a conforming recess in a spool 23 to which a tape 24 is connected. The spool 23 has its upper end supported by a spring 25 which engages the trunnion 26 so that by exerting upward movement of said spool, the spring 25 will yield when said spool may be removed from the housing 20. The spool 23 has one end of the tape 24 attached thereto while the opposite end of said tape is attached to a spool 27 which is likewise removably supported as by a spring 28 engaging the trunnion 29. The tape 24 may pass directly from the spool 27 to the spool 23 but when applied to an instrument of this character, the spool 23 will be located centrally over the instrument and in view thereof, it may be desired to cause the tape to pass about the pins 30 and 31 to expose a greater length of said tape through the window 32 formed in the front wall of the housing 20. This tape is shown in the drawing as having musical staff 32′ formed thereon and the wording 33 printed below the musical staff. The lower end of the sleeve 15 may be split to permit said sleeve frictionally engaging the upper end of the spindle 12.

In Fig. 3 of the drawings, a modification of the sleeve 15 is shown in which the sleeve 34 has a key-way 35 to receive the pin 36 carried by the shaft 37 and in this type, the sleeve 34 receives the spindle 38 but has no frictional contact therewith. The sleeve has a depending pin 39 which engages in an aperture 40 formed in the record 41. As the aperture 40 in the record 41 serves to impart movement into the sleeve 34 and as the spool 23 has only one application upon the head 21, it is apparent that it is always possible to synchronize the tape 24 with the record 41.

It is thought that the operation of the device is clearly disclosed in the foregoing and that its application to musical instruments of different characters is evident as well as possible modifications to meet certain requirements.

Having thus described my invention, I claim:—

1. In a device of the class described, in combination with a phonograph having a driving spindle, a turn-table, a phonetic record carried by said turn-table, a moving tape, indications on said tape corresponding with the phonetic sounds from said record and positive connection between said phonetic record and said tape for actuating said moving tape in synchronism with said record.

2. In a device of the character described comprising in combination a phonograph having a driving spindle, a turn-table thereon, a phonetic record on said turntable, a moving tape bearing indications similar to the phonetic sounds from said record, a housing having a restricted visual opening for exposing a restricted portion of said moving tape, a detachable shaft having positive engagement with said musical record, said moving tape being detachably supported by said shaft and the indications on said tape being exposed through said visual opening in synchronism with the phonetic sounds of said musical record.

3. In a device of the character described, a driving shaft, a turntable carried thereby, a musical record detachably carried by said turntable, said musical record having a socket formed therein, a detachable shaft for engagement with said driving shaft and an offset carried by said detachable shaft for engagement in the socket formed by said musical record.

4. In a device of the class described, in combination, a driving shaft, a turntable carried thereby, a musical record carried by said turntable, said musical record having frictional contact with said turntable, a supplemental shaft in alinement with said driving shaft, said supplemental shaft having an irregular head carried thereby, a spool detachably carried by said irregular head and means for driving said supplemental shaft by positive engagement of a portion thereof with said musical record.

In testimony whereof I affix my signature in presence of two witnesses.

ARCHIE B. POPOSKEY.

Witnesses:

GEORGE L. THOM,

MAE PERRY.