Nov. 7, 1933. W. J. WILLIAMS 1,934,578

PRINT HANDLING APPARATUS

Filed Oct. 22, 1928 2 Sheets-Sheet 1

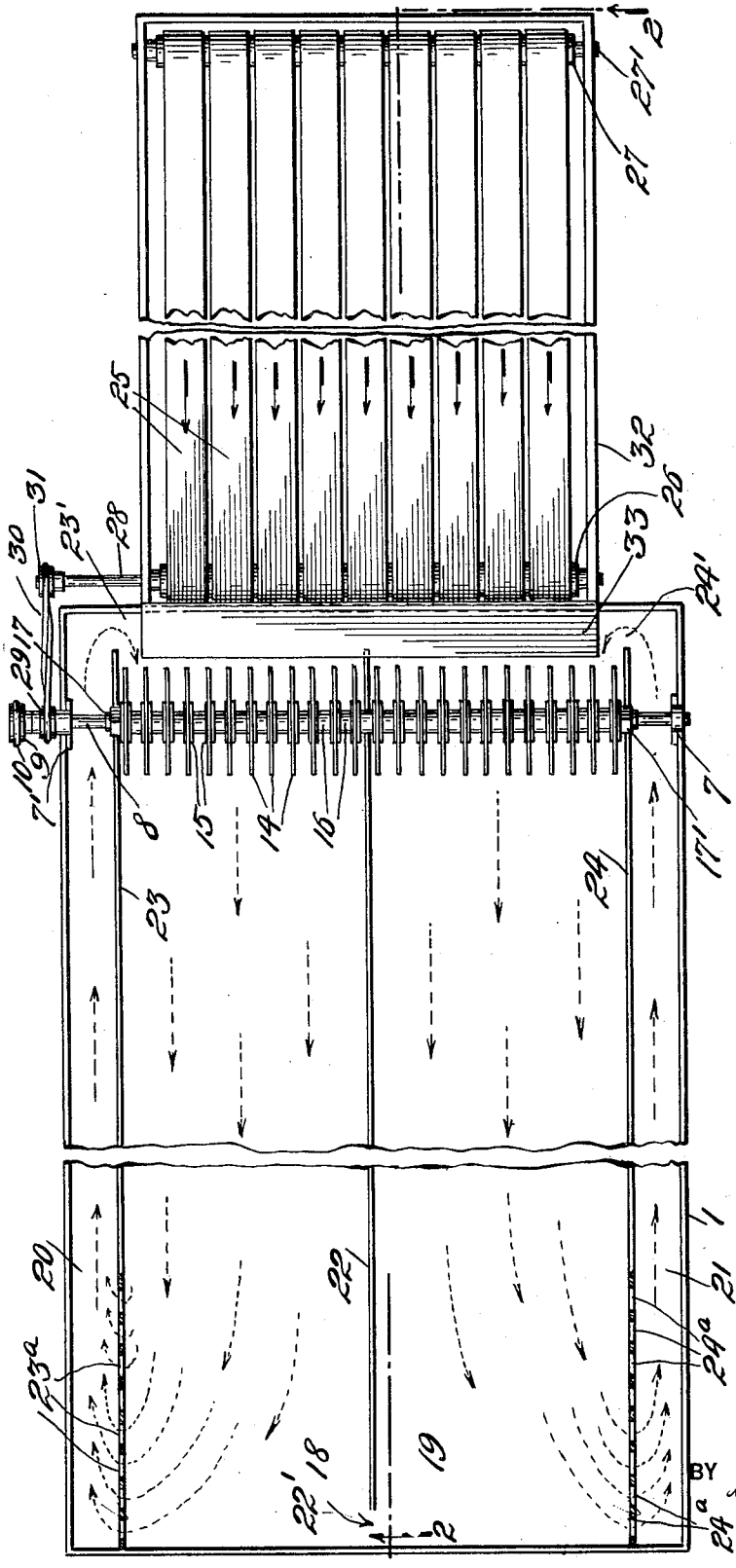

Fig. 1.

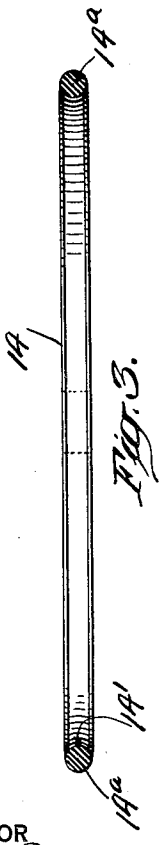

Fig. 3.

INVENTOR
Walter J. Williams
BY by Joseph F. O'Brien
ATTORNEY

Nov. 7, 1933. W. J. WILLIAMS 1,934,578

PRINT HANDLING APPARATUS

Filed Oct. 22, 1928 2 Sheets-Sheet 2

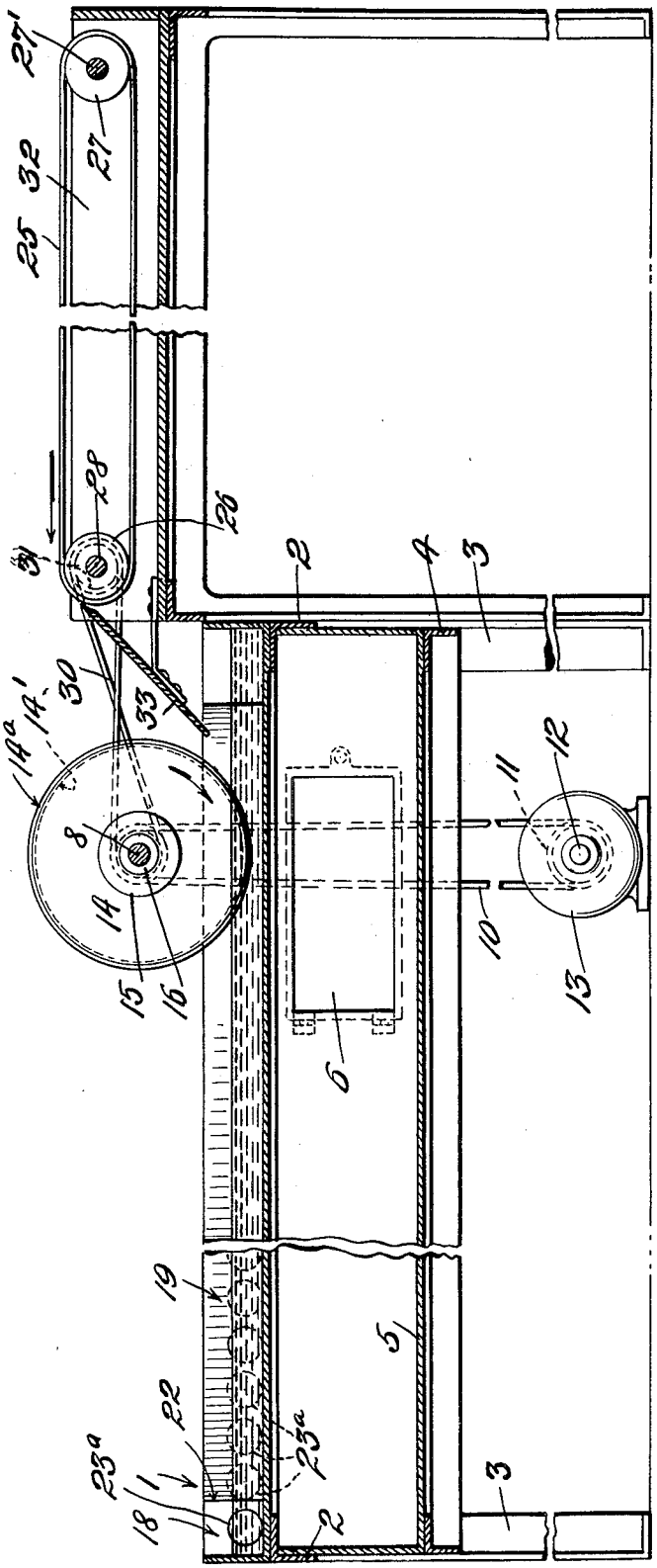

Fig. 2.

INVENTOR
Walter J. Williams
BY
Joseph F. O'Brien
ATTORNEY

Patented Nov. 7, 1933 1,934,578

UNITED STATES PATENT OFFICE

1,934,578

PRINT HANDLING APPARATUS

Walter J. Williams, Woodhaven, N. Y.

Application October 22, 1928. Serial No. 314,149

6 Claims. (Cl. 95—89)

This invention relates to improvements in print-handling apparatus.

One of the objects of this invention is to provide an apparatus for handling photographic prints having means by which the prints will be rapidly immersed or submerged in treating liquid and will be carried forwardly by said liquid away from the submerging element.

Still another object of the invention is to provide an immersing or submerging element capable of submerging prints within an immersing liquid and also causing, without undue agitation of the liquid, a continuous forward print-conveying movement of said liquid.

Still another object of the invention is to provide a submerging element which may be rotated within the liquid to submerge prints therein and which may be rotated at a relatively high rate of speed to cause an initial rapid forward movement of the prints without any backward suctional movement thereof and which will also cause a continuous forward print-conveying movement of the liquid and a return movement thereof through a by-pass so as to produce a continuous circulation or circulating movement of the print-treating liquid.

Still another object of the invention is to provide a rotating device comprising a series of discs suitably spaced apart and operable to engage prints brought into contact therewith to submerge the same and simultaneously move them forwardly and also simultaneously to produce a forward movement of the print-treating liquid by such rotatable elements.

Still another object of the invention is to provide in combination with a rotatable element, such as described, of a conveyor belt arranged to convey prints to said immersing element and to discharge the same beneath and in contact therewith.

With these and other objects in view, the invention comprises the combination of members and arrangement of parts so combined as to coact and cooperate with each other in the performance of the functions and the accomplishment of the results herein contemplated, and comprises in one of its adaptations the species or preferred form illustrated in the accompanying drawings, in which:—

Fig. 1 is a plan view of a machine embodying my invention;

Fig. 2 is a vertical section on the line 2—2 of Fig. 1, looking in the direction of the arrow; and

Fig. 3 is an edge view of one of the discs employed in my submerging element, showing the peripheral edging strip in section.

Referring now to these drawings, which illustrate a preferred embodiment of my invention, 1 indicates a relatively shallow pan which is, as shown, supported upon a frame 2 having feet 3 resting on a floor or other suitable support. As illustrated, the feet 3 are also provided with a lower frame 4 which supports a rectangular icing compartment 5, access to which may be had through a door 6.

Mounted above the receptacle or pan 1 in suitable bearing brackets 7, 7' is a shaft 8 rotated in any suitable way and, as shown, said shaft is provided with a pulley 9 driven by a belt 10 from a pulley 11 on the shaft 12 of a motor 13 supported, as shown, on the floor below said shaft. Mounted on said shaft to rotate therewith are a series of relatively thin discs 14, each having an edge or periphery of relatively soft material such as soft rubber and each of these discs is preferably composed of hard rubber having a peripheral groove 14' in which is seated a peripheral band or edging strip 14^a of soft rubber. These discs are spaced apart on said shaft. As illustrated, each of such discs 14 is provided with clamping plates 15 and inserted between each set of clamping plates and discs on the shaft are a series of spacing spools 16, the entire series preferably being tightened on the shaft by nuts 17, 17'.

The pan 1 is divided into a plurality of sections and, as illustrated, I have shown two print-developing sections 18 and 19 and on opposite sides of these sections, I have shown liquid-return sections or by-passes 20 and 21. As shown, the sections 18 and 19 are separated by a partition 22 which preferably divides the print-developing portion of the pan into two halves which communicate at the outer end thereof by a channel 22'. The return sections or channels or by-passes 20, 21 are separated respectively from the developing section by partitions 23 and 24 which preferably extend from the forward end of the tank to a point adjacent to the rear thereof so as to allow communicating openings 23', 24' at the rear ends thereof and these partitions also have at the forward ends thereof two series of holes 23^a, 24^a so as to provide a communication between the tank sections 18 and 19 with the by-passes 20 and 21 respectively at the forward end of the machine. This arrangement of partitions and communicating apertures or channels permits a circulation of the treating or developing liquid within the pan in a forward direction and

thence through the by-passes to the rear of the pan at the back or rear of the immersing or submerging element which also has the function of circulating the treating or developing liquid within the receptacle or pan 1.

The elements 14 rotate on the shaft and have a segment thereof extending within the treating or developing liquid and in the preferred embodiment of my invention, prints are conveyed to and deposited behind or in the rear of these rotating discs, the peripheries or edges of which thereupon contact with the prints and not only submerge the same but move them forwardly through the treating or developing liquid.

It is desirable that the developing liquid be moved or circulated so as to carry the prints forwardly but it is undesirable to agitate this liquid excessively and by the use of my invention, I am enabled to immerse or submerge the prints rapidly and at the same time to produce a slow circulating movement of the developing or treating liquid from the rear to the forward end of the tank and thus to enable prints to be carried away from the submerging element by the circulating movement of the liquid so that additional prints may be immediately acted upon by said revolving discs and, furthermore, that the liquid will not be unduly disturbed or agitated during the process of submerging the prints and circulating the liquid.

In the preferred embodiment of my invention, I provide a conveyor mechanism and, as shown, a series of conveying belts 25 for conveying the prints to the submerging or immersing element. As shown, these belts are mounted on rollers 26 and 27 and the roller 26 is mounted upon a shaft 28 which is driven from the shaft 8. As illustrated, the shaft 8 is provided with a pulley 29 driving a belt 30 which drives a pulley 31 on the shaft 28. The shaft 28 and the shaft 27' are both mounted to rotate in a rectangular frame 32 and the series of belts form a conveying table which may be of any desirable length for conveying prints to the treating tank 1 behind or in the rear of the immersing elements. I also preferably provide at the end of the conveying table contiguous to the submerging or immersing element a guiding apron 33 extending from the upper surface of the conveying belts 25 to a lower section of the submerging elements or discs 14.

It is desirable in order to increase the frictional contact between the peripheries of the discs 14 and the prints to be submerged thereby, that these peripheries or edges be composed of a relatively soft material.

In the preferred embodiment of my invention, each of the discs is preferably formed of hard rubber as more particularly shown in Fig. 3 and the periphery thereof is provided with a groove 14' preferably semi-circular in cross section in which is seated a rim strip or tire 14^a preferably circular in cross section and composed of soft rubber. By the use of this soft rubber edging or rim, I am enabled to produce between the periphery of the discs and the prints an increased frictional and elastic grip between the top print and the discs so that in case a series of photographic prints superimposed upon each other are passed simultaneously over the feed chute or guiding apron 33, the soft rubber edges of the rapidly-moving discs will thereupon produce such an elastic grip with the top print and will, in effect, shoot the same forwardly through the liquid into the pan and this operation will be repeated with the next print engaged and any succeeding prints.

From the above, it will be seen that I provide not only for initial submerging and rapid forward movement of the prints but I also provide for the separation of any superimposed prints and the movement thereof separately.

As hereinabove indicated, when the prints are so shot or rapidly moved forwardly by the discs, the circulating movement of the liquid will then continue this initial movement, cause the prints to be moved toward the forward end of the pan and also prevent any tendency of the prints to return to or to be wound around the submerging element.

I prefer to rotate the discs at the high speed of about two hundred fifty (250) revolutions per minute as I find that this speed gives especially good results and I am enabled to handle and develop prints at a very high rate of speed. I do not, however, limit myself to any such high speed as the device will be fully operative at a much slower rate of speed and also at a much higher rate of speed.

Having described my invention, I claim:—

1. Print-handling apparatus embodying, in combination, a shallow liquid receptacle adapted to contain print-treating liquid and divided by a partition into a print-treating section and a liquid-return section, said sections communicating with each other adjacent to one end, a transverse shaft mounted to extend over said receptacle and a rotary mechanically-actuated current-producing element on said shaft and rotating in contact with the liquid in one of said sections at the opposite end of said receptacle to cause a circulation of the liquid through said sections.

2. Print-handling apparatus embodying, in combination, a shallow liquid receptacle adapted to contain print-treating liquid and divided by a partition into a print-treating section and a liquid-return section, said sections communicating with each other adjacent to one end, a transverse shaft mounted to extend over said receptacle and a rotary mechanically-actuated current-producing element on said shaft and rotating in contact with the liquid in the print-treating section at the opposite end of said receptacle to cause a circulation of the liquid through said sections.

3. Print-handling apparatus embodying, in combination, a shallow-liquid receptacle adapted to contain print-treating liquid and divided by a partition into a horizontally disposed print-treating section and a horizontally disposed liquid-return section, said sections communicating with each other adjacent at one end, and a rotary print-submerging element mounted above said print-treating section at the opposite end and dipping within liquid therein to submerge prints in said liquid and to produce a horizontally disposed circulating current of liquid passing through said two sections.

4. Print-handling apparatus embodying, in combination, a shallow liquid receptacle adapted to contain print-treating liquid and divided by a partition into a print-treating section and a liquid-return section, a combined submerging and current-producing element arranged to contact with the liquid in said print-treating section, said print-treating and liquid-return sections having a communicating channel at the rear of said combined submerging and current-producing element and a series of communicating apertures through said partition at the forward side of said combined submerging and current-producing element, the apertures at the forward side of said combined rotatable submerging and

current-producing element having a greater area than the channel at the rear thereof.

5. Print-handling apparatus embodying, in combination, an open shallow liquid receptacle adapted to contain print-treating liquid and divided by partitions into a plurality of horizontally disposed print-treating sections and a plurality of horizontally-disposed liquid-return sections, said print-treating and return sections communicating with each other adjacent to one end of said receptacle, a horizontal shaft mounted to extend over said receptacle and a rotary mechanically-actuated current-producing element arranged in contact with the liquid in the print-treating sections at the opposite end of the receptacle to cause a horizontally-disposed circulation of the liquid through said print-treating and return sections.

6. Print-handling apparatus embodying, in combination, an open shallow liquid receptacle adapted to contain print-treating liquid and divided by partitions into a plurality of horizontally disposed print-treating sections and a plurality of horizontally-disposed liquid-return sections, said print-treating and return sections communicating with each other adjacent to one end of said receptacle, a horizontal shaft mounted to extend over said receptacle, a rotary mechanically-actuated current-producing element arranged in contact with the liquid in the print-treating sections at the opposite end of the receptacle to cause a horizontally-disposed circulation of the liquid through said print-treating and return sections, a chute at the rear of said rotary element, and a conveyor belt for conveying prints to said chute divided longitudinally into a plurality of sections.

WALTER J. WILLIAMS.