Nov. 16, 1954 S. M. DEL CAMP 2,694,799

SOCKET MEMBER AND CONTACT THEREFOR

Filed June 30, 1950 2 Sheets-Sheet 1

FIG. 1.

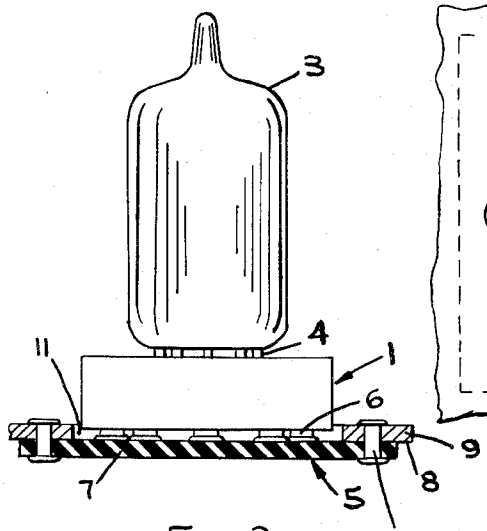

FIG. 2.

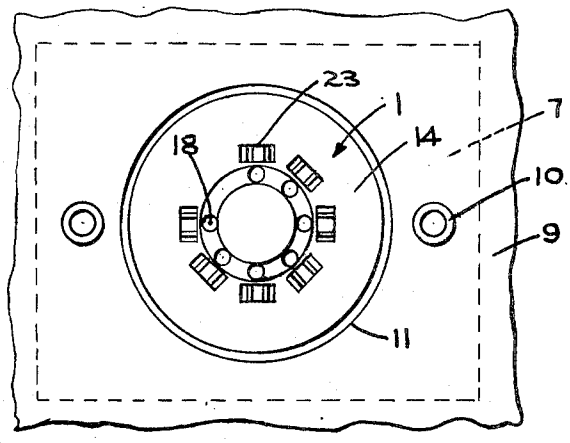

FIG. 3.

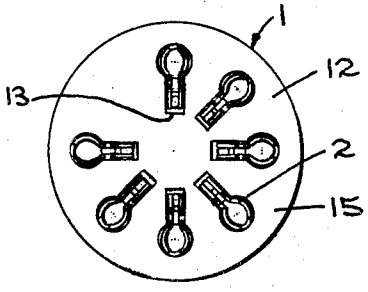

FIG. 4.

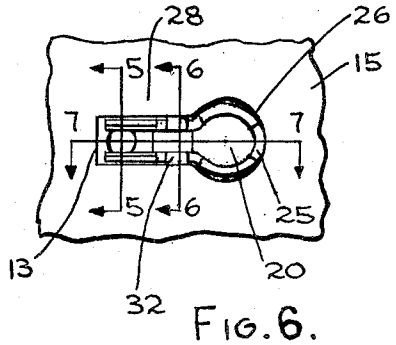

FIG. 5.

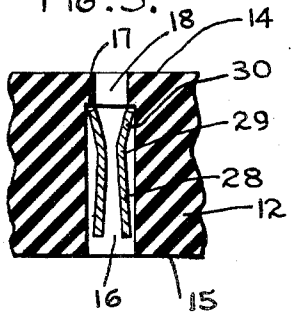

FIG. 6.

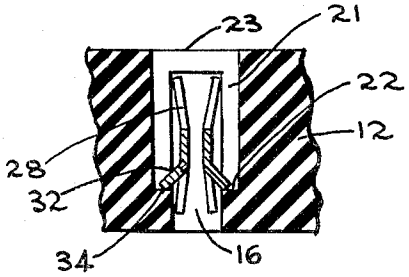

INVENTOR
SCIPIONE M. DEL CAMP,
BY John Todd
ATTORNEY

Nov. 16, 1954 S. M. DEL CAMP 2,694,799

SOCKET MEMBER AND CONTACT THEREFOR

Filed June 30, 1950 2 Sheets-Sheet 2

FIG. 7.

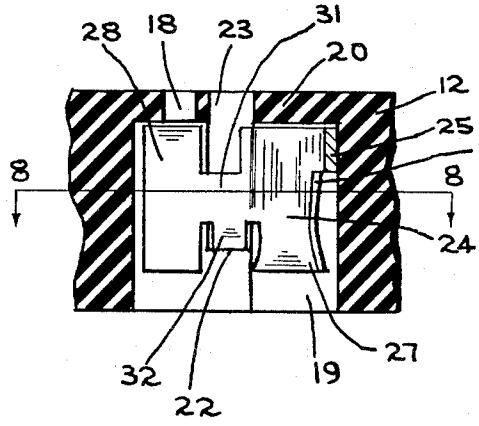

FIG. 8.

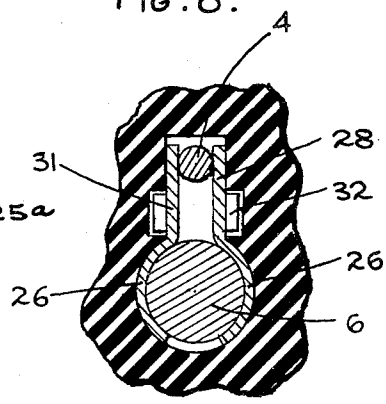

FIG. 9.

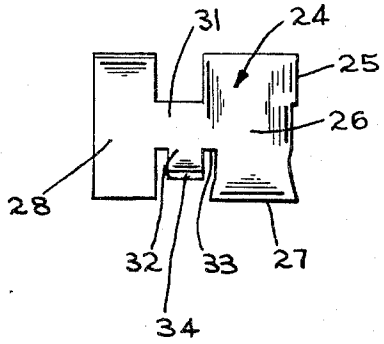

FIG. 10.

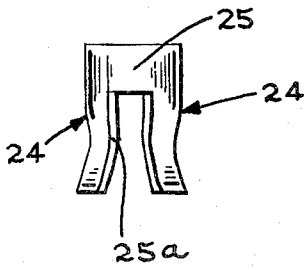

INVENTOR
SCIPIONE M. DEL CAMP,
BY John Todd
ATTORNEY.

United States Patent Office

2,694,799

Patented Nov. 16, 1954

2,694,799

SOCKET MEMBER AND CONTACT THEREFOR

Scipione M. Del Camp, Maywood, Ill., assignor to Cinch Manufacturing Corporation, Chicago, Ill., a corporation of Illinois

Application June 30, 1950, Serial No. 171,430

3 Claims. (Cl. 339—154)

This invention relates to improvements in socket devices for use in combination with electrical units providing prong-like terminals.

The main object of my invention is the provision of a socket body or adapter preferably made of one piece of insulating material carrying contact members arranged in combination with the socket member in such a way that an electrical engagement may be completed with prong terminals entering the contact members from both the upper and lower sides of the socket body.

Another object of my invention is the provision of a socket body carrying contact members each of which is adapted to make electrical engagement with two prong terminals which may have different diameter sizes.

A further object of my invention is the provision of a contact member which is constructed to be snapped into engagement with a socket body by movement of the contact member into an opening of the socket body.

Other objects of my invention will be apparent from inspection of the drawing and specification hereinbelow set forth.

Referring to the drawings in which I have illustrated a preferred embodiment of my invention;

Fig. 1 is a side elevation of my improved socket member in combination with a pair of prong-carrying electrical units;

Fig. 2 is a top view of the installation shown in Fig. 1 with the upper tube unit omitted;

Fig. 3 is a bottom view of the socket unit per se;

Fig. 4 is an enlarged view of one of the improved contact members in combination with the socket body;

Fig. 5 is a section slightly enlarged taken along the line 5—5 of Fig. 4;

Fig. 6 is a section slightly enlarged taken along the line 6—6 of Fig. 4;

Fig. 7 is a section slightly enlarged taken along the line 7—7 of Fig. 4;

Fig. 8 is a section taken along the line 8—8 of Fig. 7;

Fig. 9 is a side elevation of the improved contact member per se; and

Fig. 10 is an end elevation of the contact member shown in Fig. 9.

Referring to the preferred socket installation illustrated in Fig. 1, I have shown a socket unit 1 carrying a series of contact members 2 (Fig. 3). In my preferred installation, a vacuum tube 3 is disposed on the upper side of the socket body 1 and provides prong terminals 4 in electrical engagement with the contact members 2 through the upper side of the socket body. A plug unit 5 carries prong terminals 6 which engage electrically the contact members 2 through the lower side of the socket body 1. The plug unit 5 in my preferred installation comprises an insulating plate 7 which carries a series of the prong terminals 6 arranged to correspond with the respective prong-receiving elements of the contact members as will be described. Lead wires (not shown) are soldered to the terminals 6. In my preferred installation the plug unit 5 is secured to the under surface 8 of a metal supporting plate 9 by means of the rivets 10. An opening 11 is provided in the plate 9 into which the prong terminals 6 project and which receives the socket unit 1 when the plug unit 5 and the socket unit 1 are in electrical engagement.

Referring in detail to the construction of the socket unit 1, I have provided a socket body-piece 12 which is made of one piece of insulating material. The body 12 provides a series of contact receiving openings 13 preferably arranged radially about the center of the socket body. Each of the openings 13 is constructed in a way to receive in snap fastener engagement one of the contact members 2 and provides openings leading to the upper surface 14 and lower surface 15 of the socket body for receiving the prong terminals 4 and 6 which electrically engage the contact members when the units are in connection.

Each of the openings 13 is of generally elongated shape and provides on its side nearest the center of the socket body a passage 16 which extends axially of the socket body from the lower surface 15 in the direction of the upper surface 14 and terminates a predetermined distance from the upper surface 14 at an abutment 17. The abutment 17 provides an opening 18 which extends from the upper surface 14 into the passage 16. A second passage 19 is disposed on the side of the opening 13 furthest from the center of the socket body. The passage 19 extends axially of the socket body from the lower surface 15 of the socket body toward the upper surface 14 and terminates in an imperforate abutment 20. Intermediate the passages 16 and 19 are passages 21—21 which, as shown in Figs. 6 and 7, extend from the upper surface 14 of the socket body axially of the socket body in the direction of the lower surface 15. The passages 21—21 are disposed on opposite sides of the opening 13 and terminate in the shoulders 22 as most clearly shown in Fig. 6. An aperture 23 is formed in the upper surface 14 of the socket body at the point at which the passages 21—21 intersect the upper surface 14 permitting a die piece to be projected into the socket body from the upper surface for forming the shoulders 22.

Referring in detail to the specific construction of the contact members 2, the contacts are preferably made of one piece of spring metal and provide as shown most clearly in Figs. 9 and 10 a pair of spaced oppositely facing wings 24—24 joined at an end of the contact. The wings 24—24 provide contact terminal receiving elements 26—26 connected at one end by the portion 25. The elements 26—26 are preferably formed of arcuate shape and cooperate to provide a substantially barrel-like contact portion having a diameter of predetermined length to engage electrically a prong terminal 6 of the plug unit 5. The elements 26—26 are separated for a portion of their lengths by the slot 25*a* which serves to increase the resilience of the contact portion. The elements 26 may be flared outwardly slightly at their lower ends 27 to provide an entering lead for the terminal 6. The wings 24—24 provide at the end of the contact member away from the connecting portion 25 a second prong-engaging portion in the form of a pair of opposed prong-engaging elements 28—28. The elements 28—28 comprise generally rectangular portions bulged inwardly slightly at points 29 intermediate their upper and lower edges to effect a spaced apart position which, when the contact member is assembled with the socket body, is less than the diameter of the prong terminals 4. As a result of this bulged construction the elements 28 provide portions 30 (Fig. 5) at their upper ends which flare outwardly slightly to provide a lead for entrance of the prong terminal 4 into electrical engagement with the elements 28 at the inwardly bulged points 29. Each of the wing portions 24 provides a narrow connecting element 31 which joins the element 28 with the element 26 at substantially their midportions. A locking tab 32 is integrally joined to the lower edge 33 of each of the connecting portions 31 and extends outwardly out of the general plane of its respective wing for a purpose to be described, and the elements 27 and 28 constitute cantilever fingers, at opposite sides of the resilient locking means 32 carried by the restricted portions 31 of the legs of the U-shaped contact member, for resiliently gripping pins inserted through the openings 18 and 19 in the body member.

In assembling the contact member with the socket body, the contact member is moved into the opening 13 from the lower surface 15 of the socket body with the contact elements 28 disposed in the passage 16 of the opening 13 and the arcuate elements 26 disposed in the opening 19. In view of the fact that the edges 34 of opposed locking tabs 32 are normally spaced apart a dis-

tance greater than the width of the opening **13** at its intersection with the lower surface **15** intermediate passages **16** and **19**, the wings **24—24** will be compressed until the edges **34** of the locking tabs have passed by the shoulders **22** at which time the wings will expand to move the locking tabs behind the shoulders as shown in Fig. 6. Thus, the contact member is seated firmly within the opening **13** downward movement thereof being prevented by engagement of the edges **34** of the locking tabs with the shoulders **22** and upward movement being limited by the abutment **20** which closes the passage **19**. The prong-engaging elements **28** of the contact member are disposed in alignment with the opening **18** so that a prong terminal projected through the opening **18** will be engaged therebetween. At the same time, the arcuate elements **26** are disposed in alignment with the intersection of the passage **19** with the lower surface **15** of the socket body so as to receive a prong terminal extended into the passage **19** from the lower side of the socket. As a result of the fact that the locking tabs **32** are disposed between the two prong-engaging portions of the contact the action of the locking tabs in attaching the contact member to the socket body does not interfere with efficient electrical engagement between the elements **28** with their respective prong terminals and the elements **26** with a second prong terminal. It will be understood that when the prong terminals are in electrical engagement with the contact member, the locking tabs are moved laterally apart to effect a more positive engagement with the shoulders **22**. As shown in Figs. 5 and 7 the body member **12** at the side thereof provided with the first pin receiving openings **18** has its abutment means **17** and **20** overlying the cantilever fingers of the contact member and thus supporting the member at both sides of the resilient locking means **32** and preventing tilting of the contact member in either direction about the resilient locking means as a fulcrum as pins are inserted and withdrawn through the openings.

In assembling the socket unit **1** with the plug unit **5**, the lower surface of the socket unit is moved toward the outer ends of the prong terminals **6** to engage the prong terminals with their respective pairs of arcuate elements **26**. The abutment **20** associated with each of the openings **13** may engage the terminal ends to provide a stop limiting movement of the socket body in the direction of the prongs. Thereafter, the tube **3**, or an equivalent electrical unit, may be electrically connected to the socket unit by moving the prong terminals **4** through the openings **18** in the upper surface of the socket body to engage the terminals with the respective pairs of contact elements **28**. As described, each of the contact members are constructed to receive pairs of prong terminals with the prong terminals of each pair having different diameters. As a result, the relatively small prong terminals of a vacuum tube may be electrically engaged with the contact members and larger prong terminals employed as the lead connections.

Although I have illustrated and described a preferred embodiment of my invention, I do not wish to be limited thereby as the scope of my invention is best defined by the following claims.

I claim:

1. An adapter of the class described comprising, in combination, a body member of insulating material having a pattern of first pin receiving openings on one of its sides and a pattern of second pin receiving openings on its other side and out of alignment with said first pin receiving openings, said second pin receiving openings being laterally elongated and each underlying and communicating adjacent one end end thereof with one of said first pin receiving openings, each of said laterally elongated second pin receiving openings having therein a U-shaped contact with its legs restricted at their mid-lengths and provided thereat with resilient locking means for interlocking with the body member, the body member being provided with spaced shoulders to receive said resilient locking means, said shoulders being the terminations of recesses from the side of the body member carrying said first pin receiving openings, through which recesses a tool can be inserted for disengaging the resilient locking means from the shoulders, the legs of each U-shaped contact comprising cantilever fingers at opposite sides of said resilient locking means aligned with the first and second pin receiving openings respectively, for resiliently gripping pins inserted through said openings.

2. An adapter of the class described comprising, in combination, a unitary body member of insulating material having at least one set of paired openings comprising a first pin receiving opening in one of its faces and a second pin receiving opening in its other face out of alignment with said first pin receiving opening, said second pin receiving opening being laterally elongated to extend under said first pin receiving opening and communicating therewith at the end of said lateral extension, said laterally extended second pin receiving opening having therein a U-shaped contact with its legs restricted at their mid-length and provided thereat with resilient locking means for interlocking with the body member, the body member being provided with spaced shoulders positioned in the mid-lengths of said elongated openings to receive said resilient locking means, said shoulders being the terminations of recesses from the side of the body member carrying said first pin receiving opening, the legs of the U-shaped contact comprising cantilever fingers at either side of said resilient locking means, aligned with the first and second pin receiving openings, respectively, for resiliently gripping pins inserted through said openings, the body member at the side thereof provided with the first pin receiving openings having abutment means overlying the cantilever fingers of said contact member and thus supporting the same at both sides of said resilient locking means and preventing tilting of said contact member in either direction about said resilient locking means as a fulcrum as pins are inserted and withdrawn through said openings.

3. An adapter contact element for securement within an adapter body of insulating material and for engaging and electrically connecting two pins inserted into said contact element from opposite sides of the insulating body, said contact member being formed of one piece of sheet metal, said piece of sheet metal being bent into a U-shape and having its legs restricted at their mid-lengths and provided thereat with resilient locking means for interlocking with shoulders in the body member, each leg of the U-shaped member comprising cantilever fingers at opposite sides of said restricted portions for resiliently gripping first and second pins inserted between the legs of the U-shaped member on opposite sides of said restricted portions.

References Cited in the file of this patent

UNITED STATES PATENTS

Number	Name	Date
1,348,395	Douglas	Aug. 3, 1920
2,158,004	Douglas	May 9, 1939
2,296,633	Falge	Sept. 22, 1942
2,304,808	Draving	Dec. 15, 1942
2,352,618	Daenz	July 4, 1944
2,422,222	Carroll	June 17, 1949
2,493,756	Fetherolf et al.	Jan. 10, 1950
2,567,829	Suthann	Sept. 11, 1951