Feb. 26, 1924. 1,485,221

C. E. GEE

BOX

Filed March 21, 1923

Fig.1.

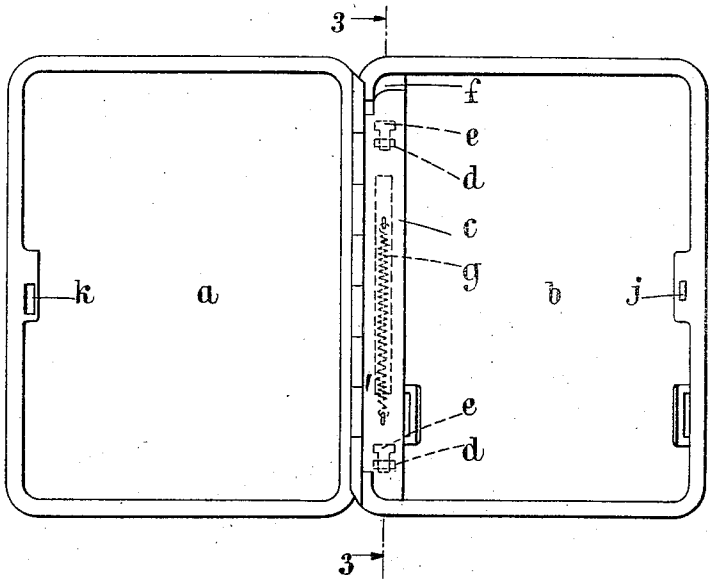

Fig.3.

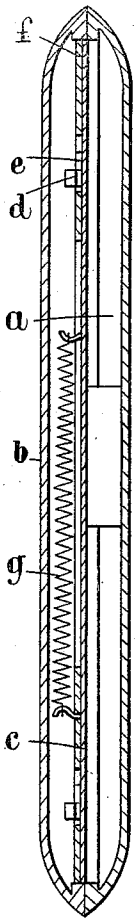

Fig.2.

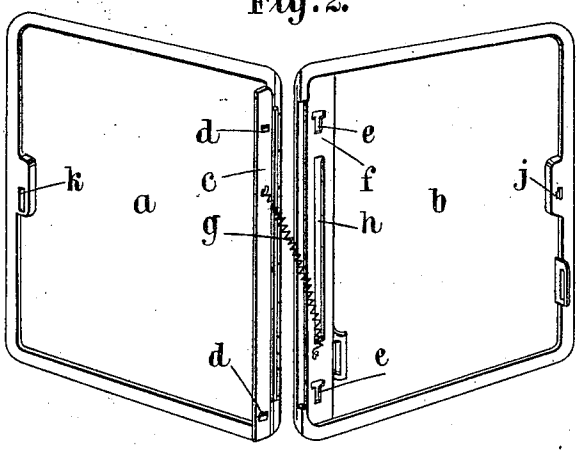

INVENTOR.
Charles Edmond Gee
By Owen L. Potts
Attorney

Patented Feb. 26, 1924. 1,485,221

UNITED STATES PATENT OFFICE.

CHARLES EDMOND GEE, OF LONDON, ENGLAND.

BOX.

Application filed March 21, 1923. Serial No. 626,593.

To all whom it may concern:

Be it known that I, CHARLES EDMOND GEE, a subject of the King of Great Britain, residing at 79 Kyrle Road, Clapham Common, London, S. W., 11, England, have invented certain new and useful Improvements in Boxes, of which the following is a specification.

This invention relates to boxes and more particularly to boxes for containing cigarettes, cigars, visiting cards and the like.

The invention also relates to boxes of the kind consisting of two parts and a strip, one part being hinged to the strip and incapable of sliding thereon, whilst the other part is secured to the strip and is capable of sliding thereon.

To open a box of the above kind, the sliding movement frees the catch and the lid turns on its hinge. In order to close the box, the action is reversed, that is, the lid is turned on its hinge and fastened by sliding one part upon the other by hand.

The object of the present invention is to provide an improved construction of the above kind of box whereby on bringing the two parts together they become fastened automatically.

Accordingly a box of the kind abovementioned is provided with means whereby the sliding movement is effected against the action of a spring or other resilient member.

The invention will now be described with reference to the accompanying drawings in which Figure 1 is a plan view of one form of cigarette case constructed in accordance with this invention and shewn in the open position; Figure 2 is a perspective view shewing the two parts, constituting the case detached and Figure 3 is a section taken on the line 3—3 of Figure 1 and looking in the direction of the arrow.

The part *a* of the case is hinged to the strip *c* and the underside of said strip is provided with two T-headed pins *d*, *d* which enter elongated slots *e*, *e*, formed in the ledge *f* fixed in the other part *b* of the case.

The strip *c* is also connected to the part *b* by the tension spring *g*, said spring being housed in the slot *h* in the ledge *f*.

Suitable locking means (not shewn) are provided to prevent the two parts *a*, *b* from becoming detached.

The fastening consists of a hook *j* on the part *b* adapted to engage a slot *k* in the part *a*.

Normally the two parts *a*, *b* coincide with the hook *j* engaged in the slot *k*.

In order to open the case, one part is slidden along the other against the action of the spring *g* and the fastening becomes undone. To close the case, the two parts are brought together, the hook *j* enters the slot *k* and the parts coincide automatically by the action of the spring.

In place of the tension spring, a compression spring or a suitable resilient member may be provided.

What I claim is:—

A box of the kind comprising two parts and a strip, one part being hinged to the strip and incapable of sliding thereon whilst the other part is secured to the strip and is capable of sliding thereon characterized in that means are provided whereby the sliding movement is effected against the action of a spring or other resilient member.

In testimony whereof I have hereunto set my hand.

CHARLES EDMOND GEE.