US 20030113108A1

(19) **United States**

(12) **Patent Application Publication** (10) **Pub. No.: US 2003/0113108 A1**

Bittner (43) **Pub. Date: Jun. 19, 2003**

(54) **LED REFLECTOR DEVICE**

(76) Inventor: **Wilfried Bittner**, Hong Kong (CN)

Correspondence Address:
Concord Camera Corp.
Suite 650N
4000 Hollywood Blvd.
Hollywood, FL 33021 (US)

(21) Appl. No.: **10/016,646**

(22) Filed: **Dec. 17, 2001**

Publication Classification

(51) **Int. Cl.**[7] **G03B 17/20**

(52) **U.S. Cl.** **396/296**

(57) **ABSTRACT**

A camera viewfinder reflector for directing light from an indicator outside the line-of-sight of the viewfinder into the viewfinder is provided. The reflector may be combined with an existing element of the camera assembly, such as a leaf spring, or may comprise a separate, distinct reflector component. Light from an indicator on the pc-board of the camera is reflected from a portion of the reflector that is located in the viewfinder at the periphery of the viewfinder lens assembly in fixed optical alignment with the ocular lens of the viewfinder.

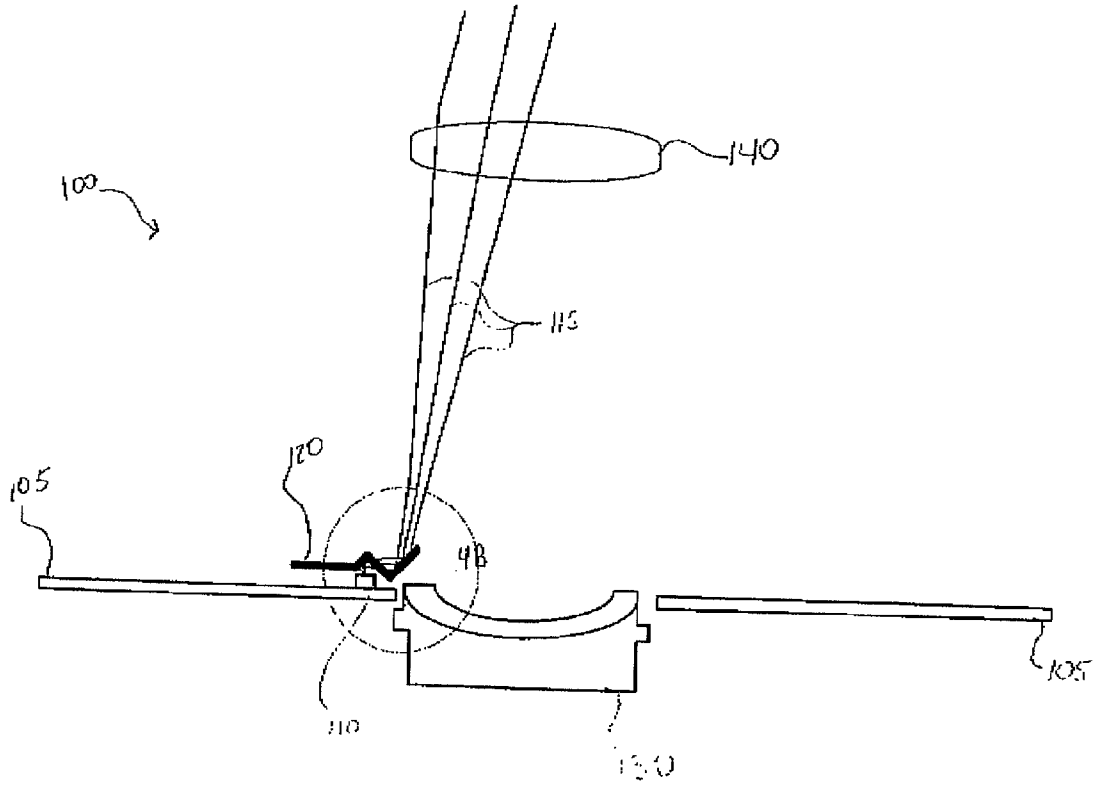

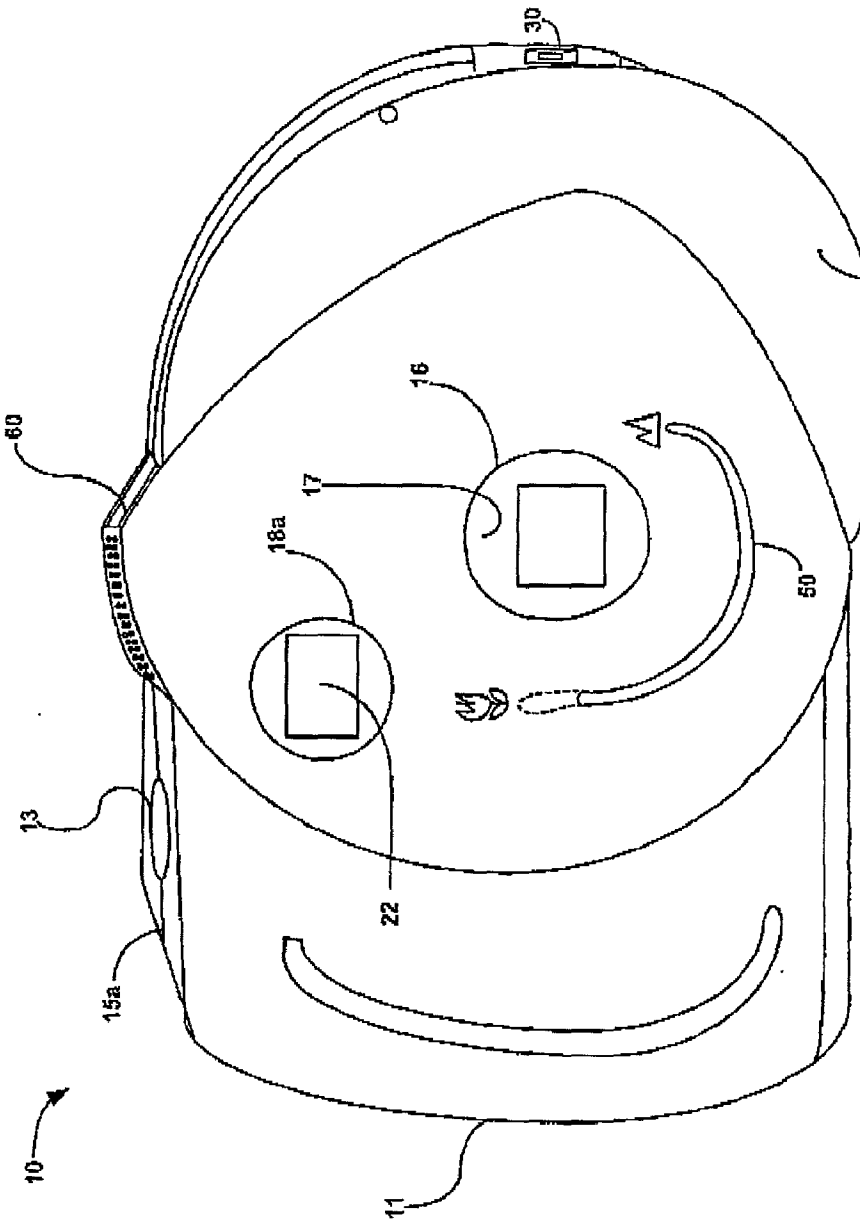

FIG. 1A

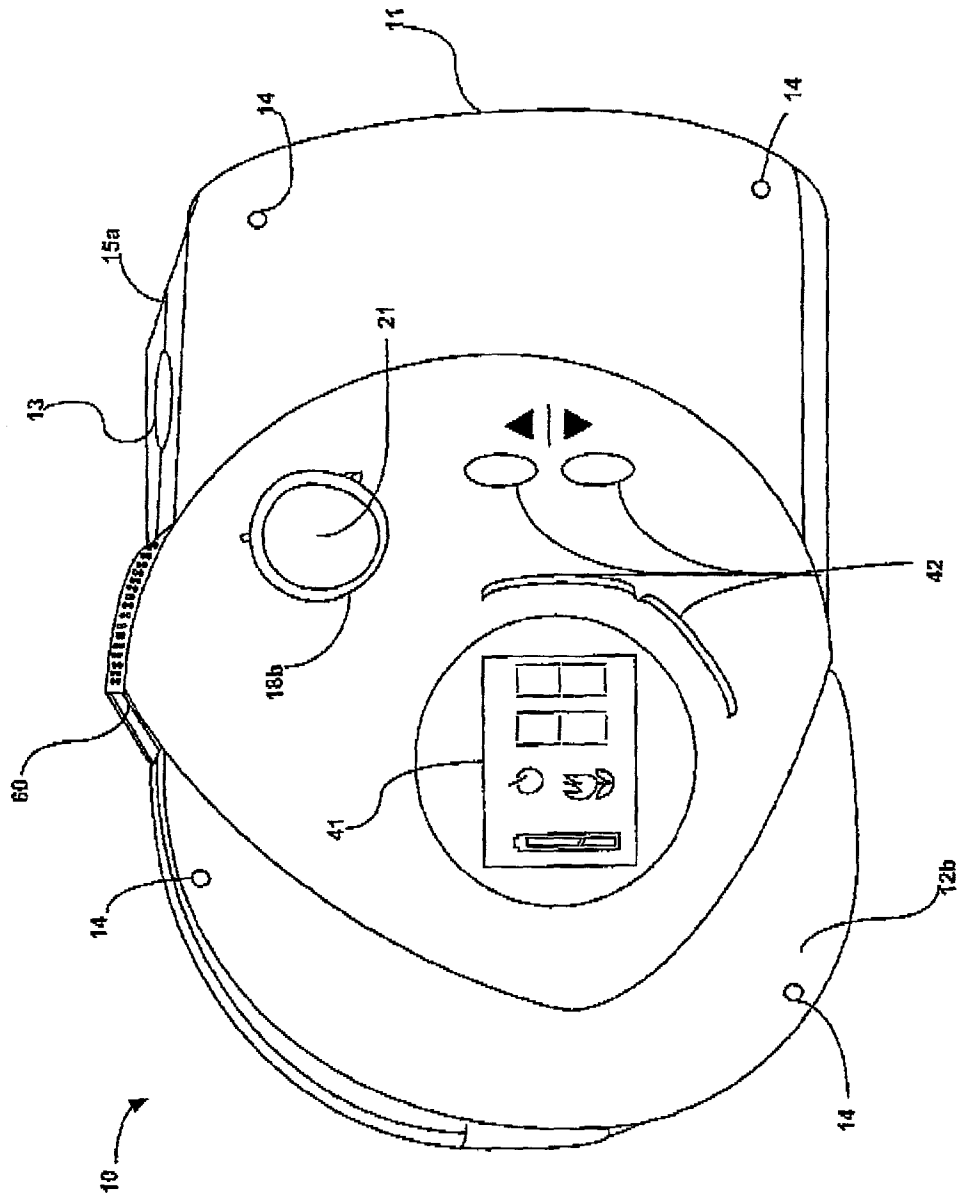

FIG. 2

FIG. 3A

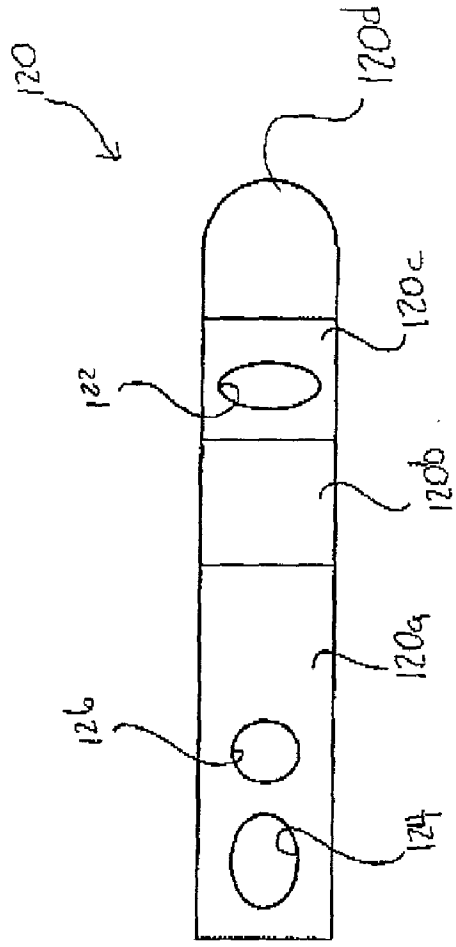
120
120d
120c
122
120b
120a
126
124

FIG. 3B

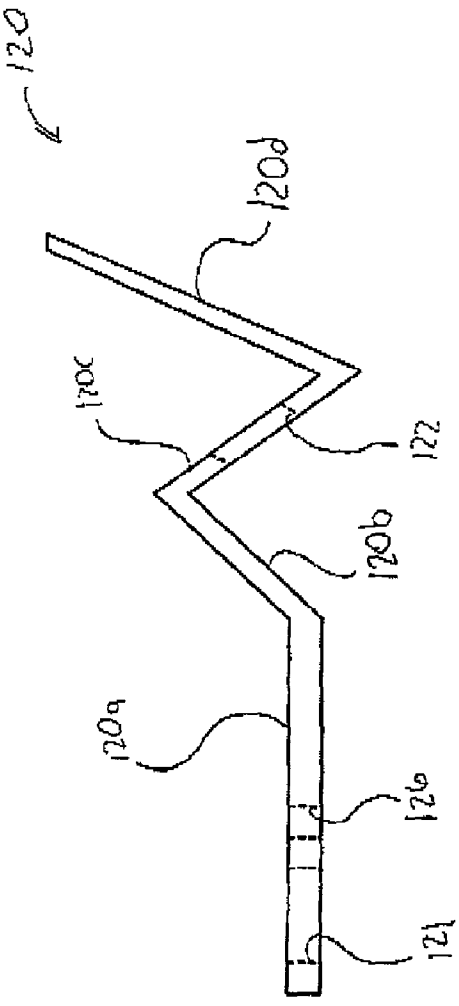
120
120d
120c
122
120b
120a
126
121

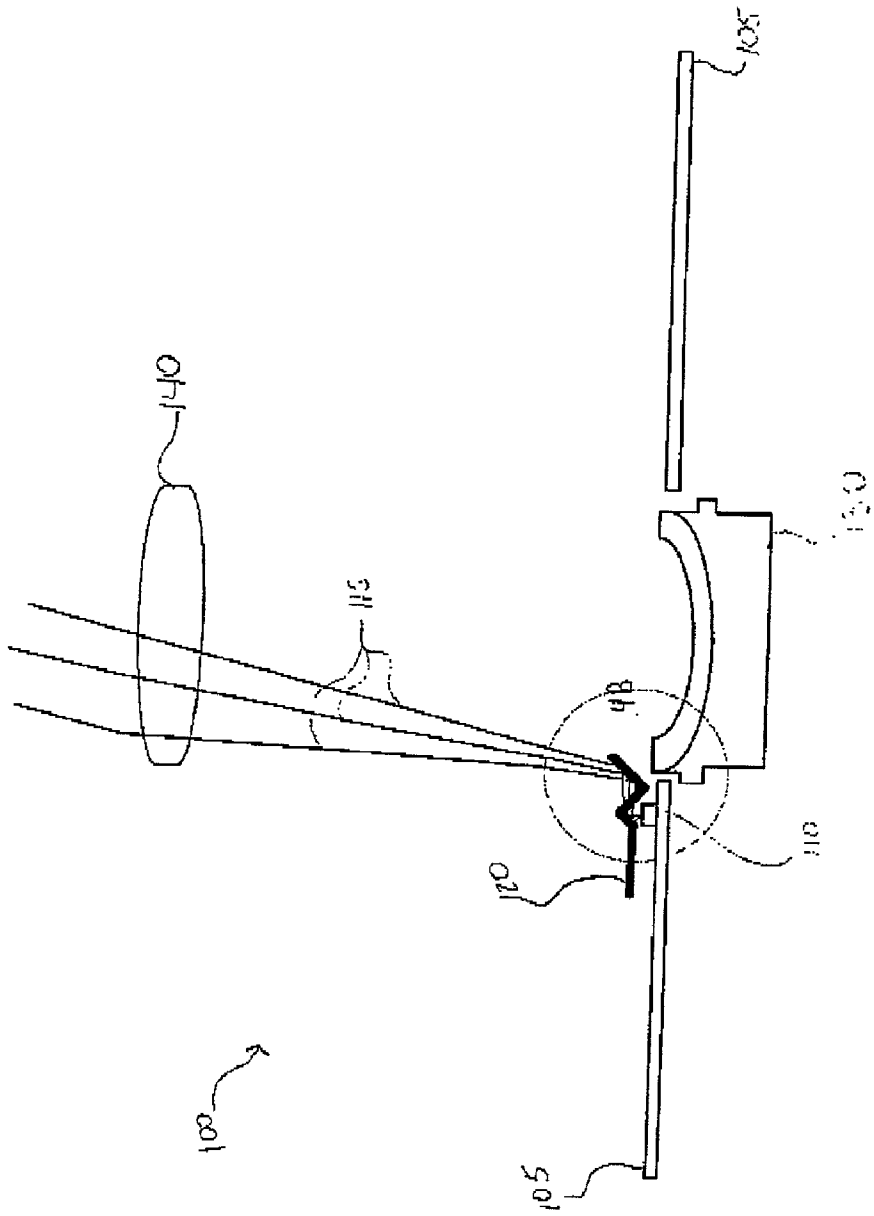

FIG. 4A

FIG. 4B

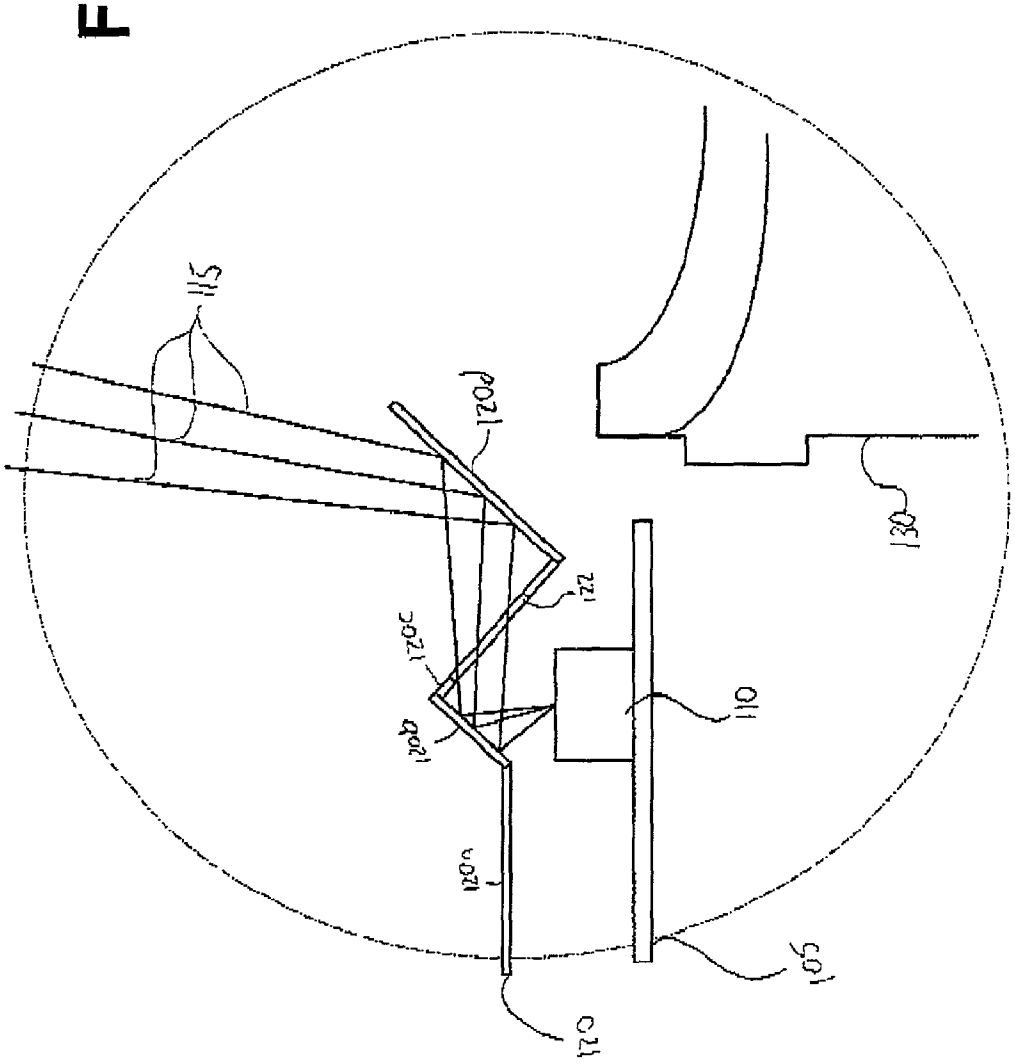

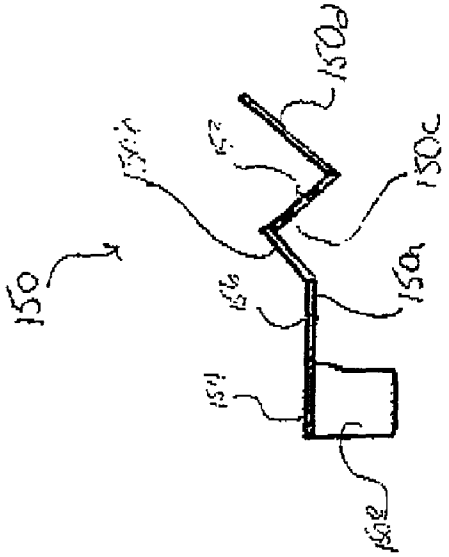
150
150d
152
150c
150a
151
150e

FIG. 5B

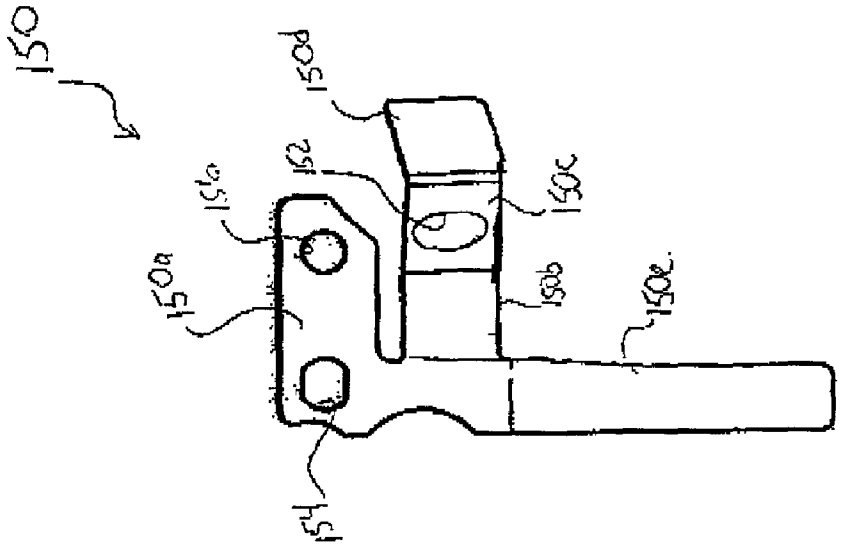
150
150d
152
151a
150c
150a
150b
150e
154

FIG. 5A

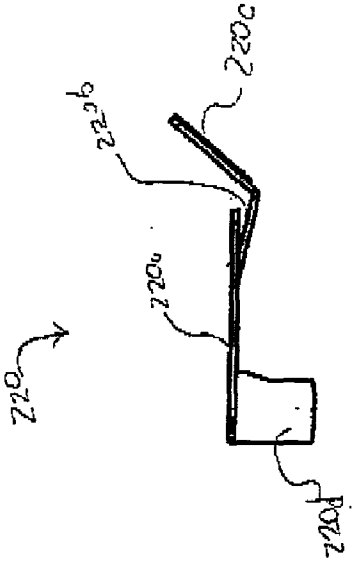

FIG. 6B

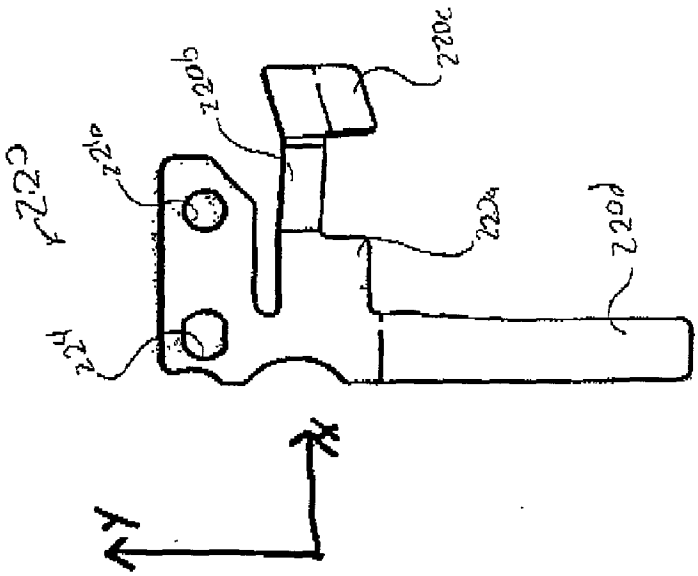

FIG. 6A

FIG. 7A

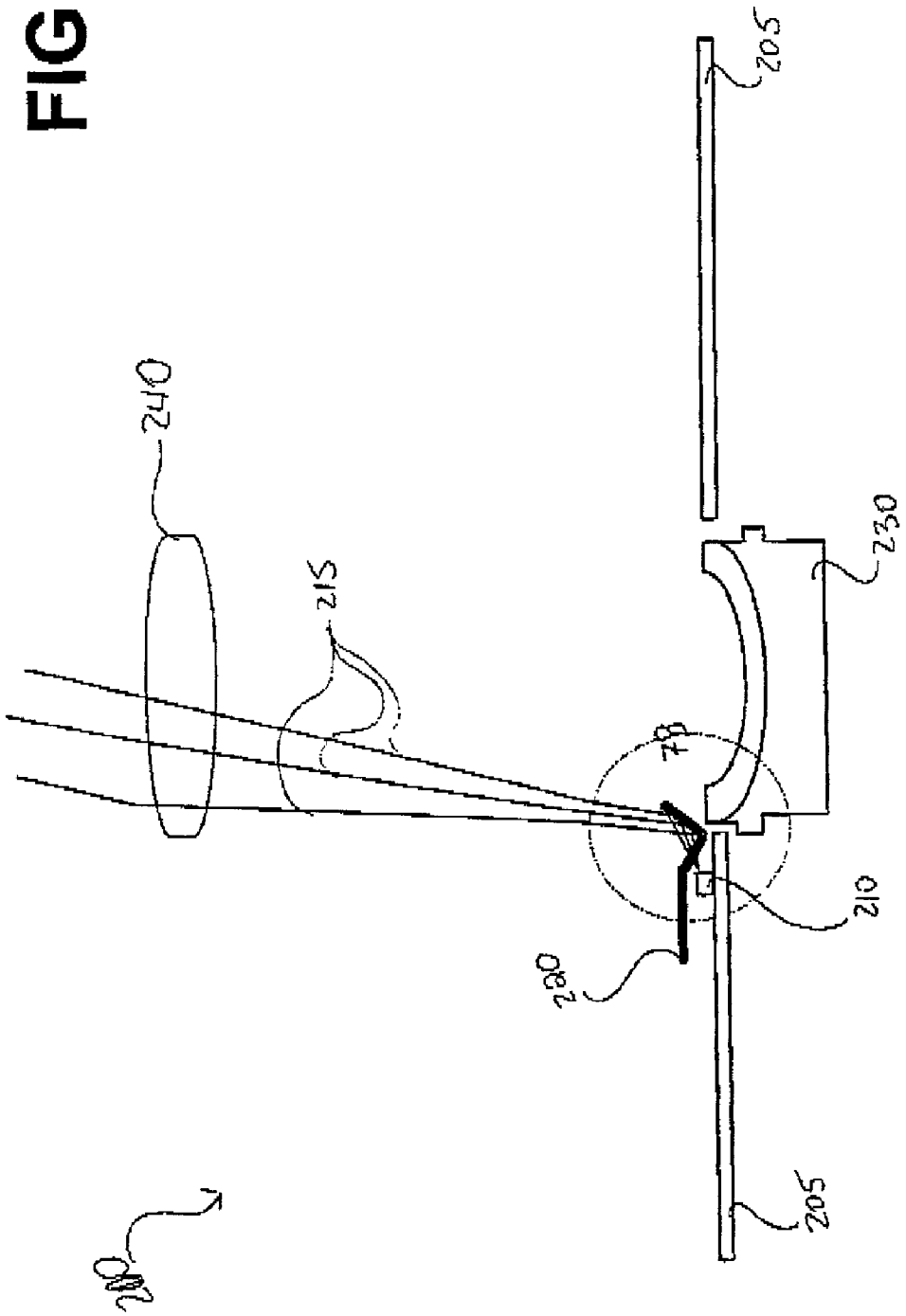

FIG. 7B

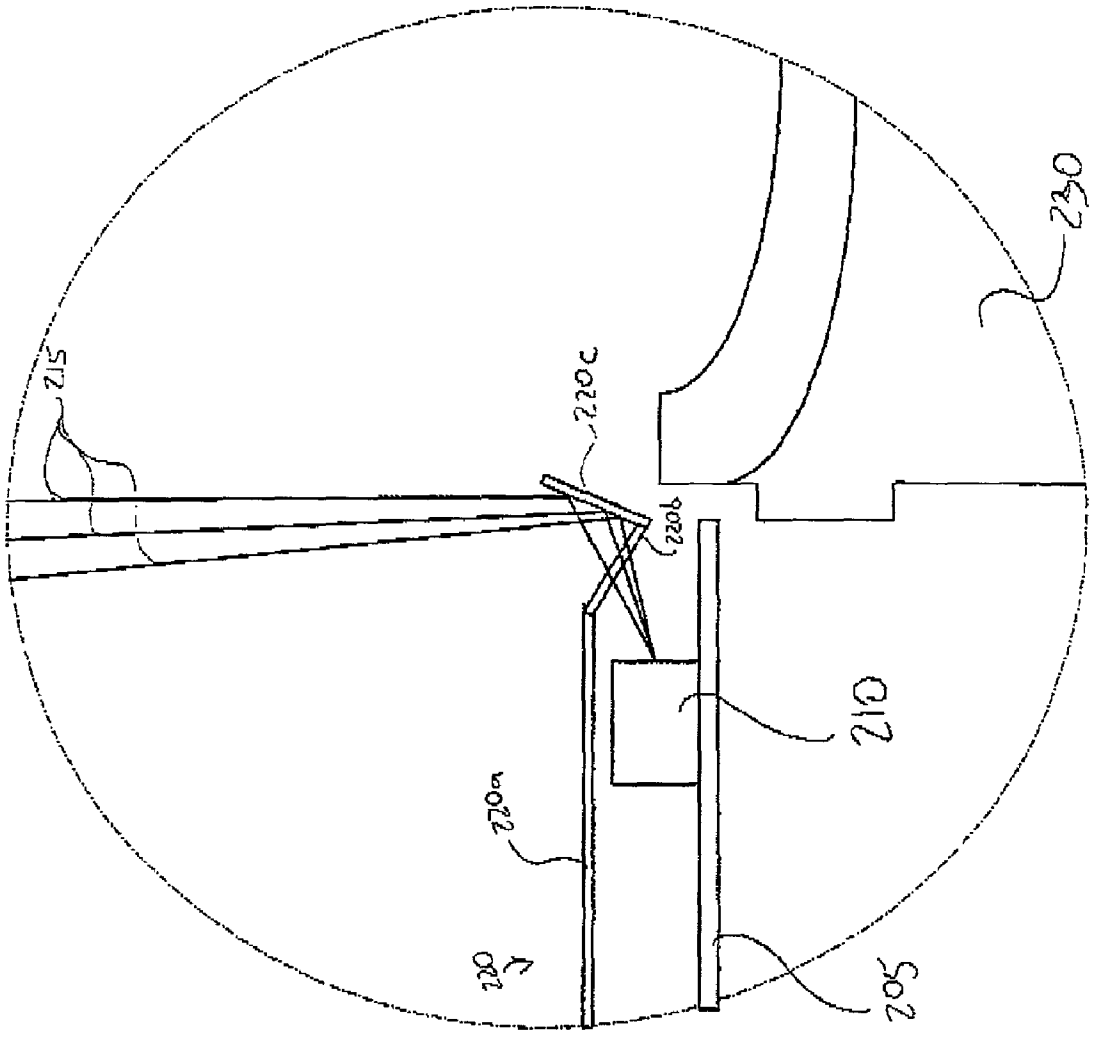

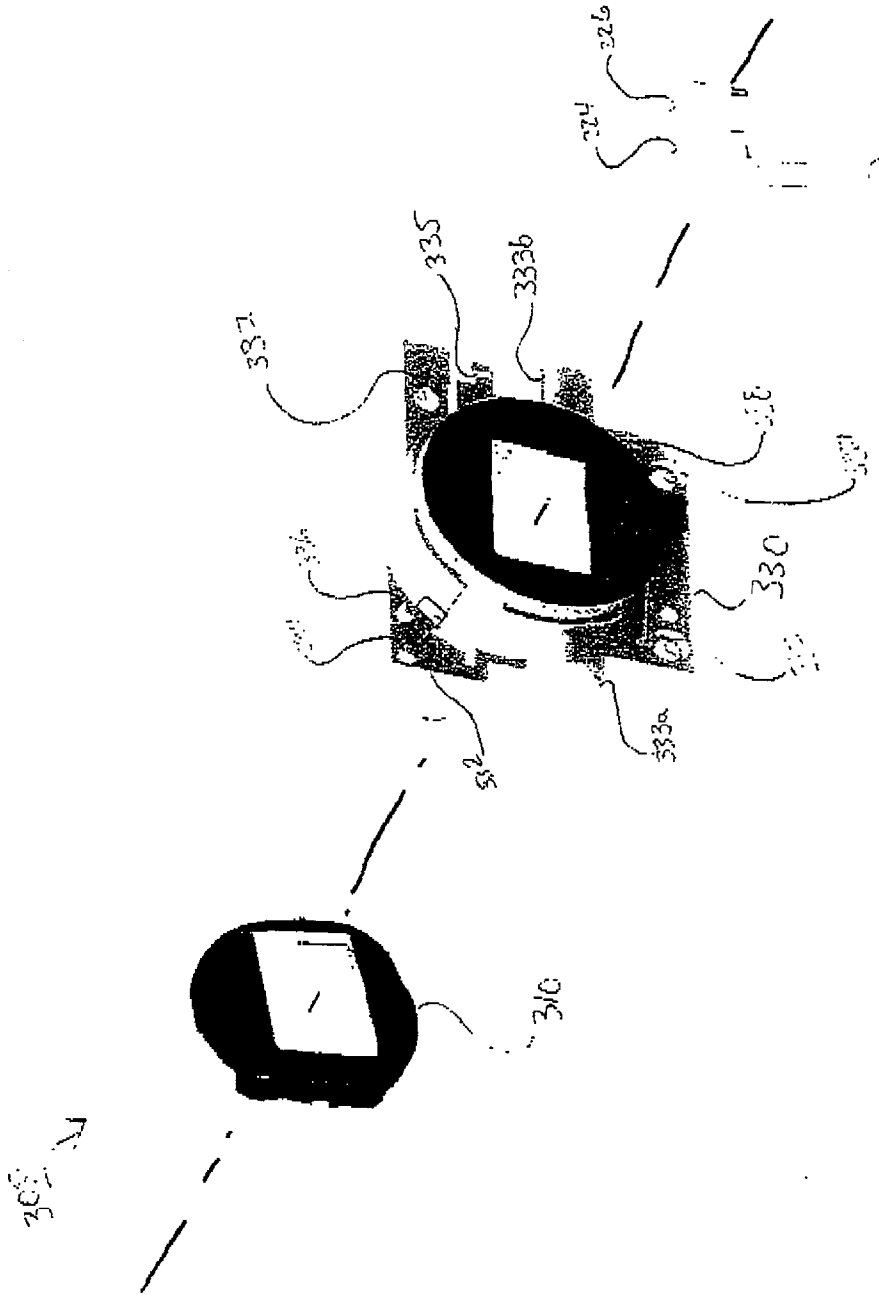

Fig. 8

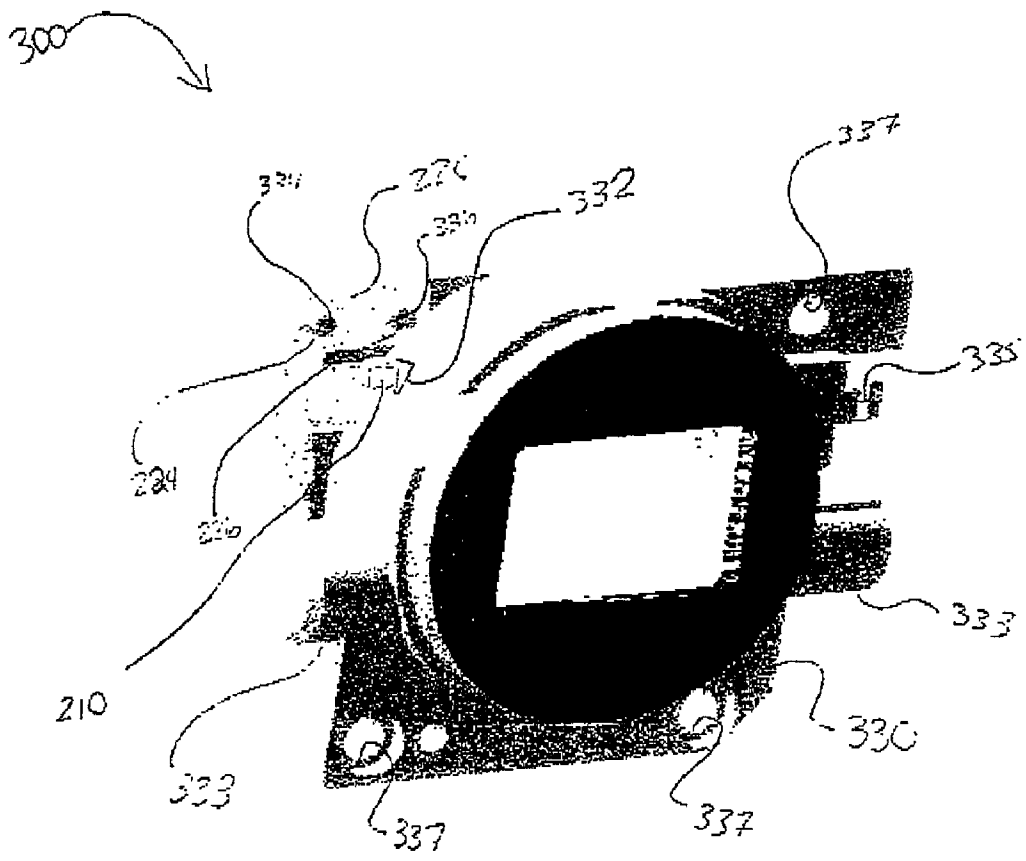

Fig. 9

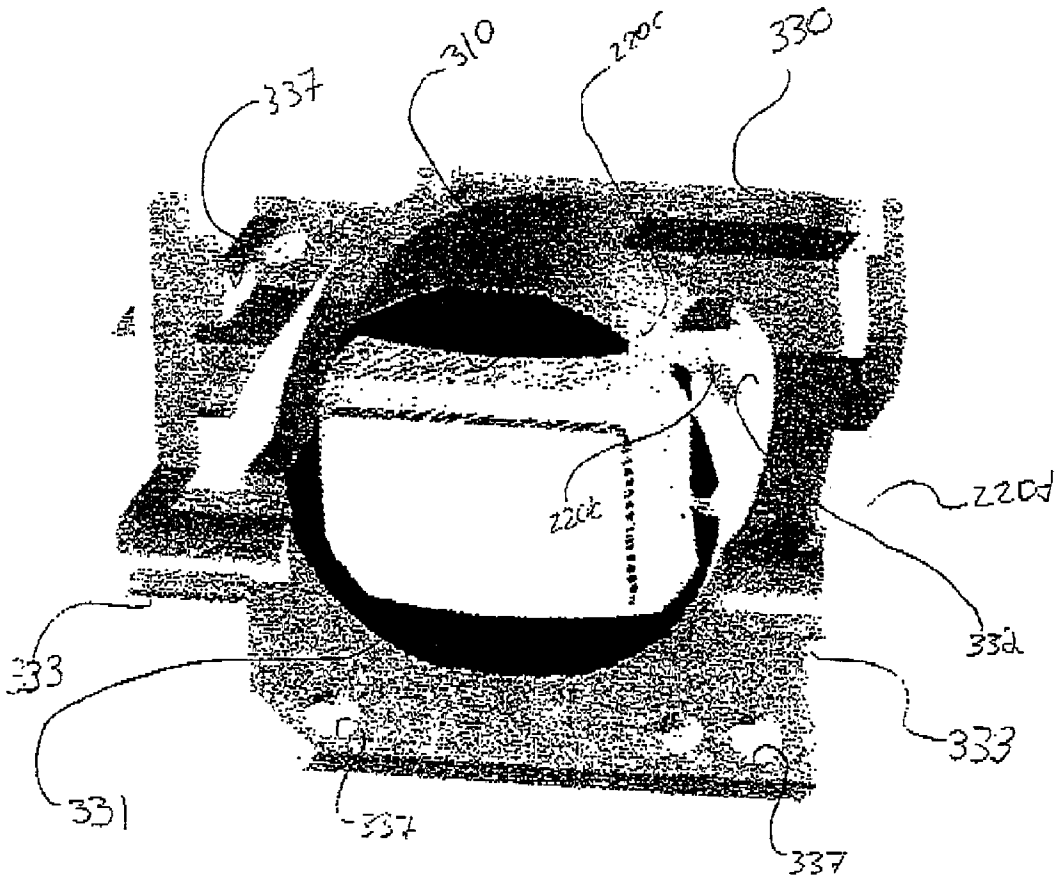

Fig. 10

FIG. 11A

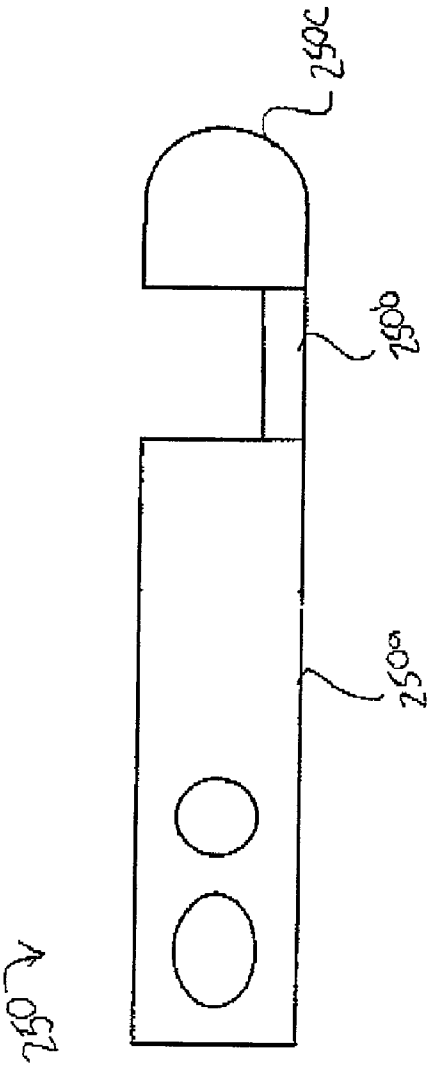

FIG. 11B

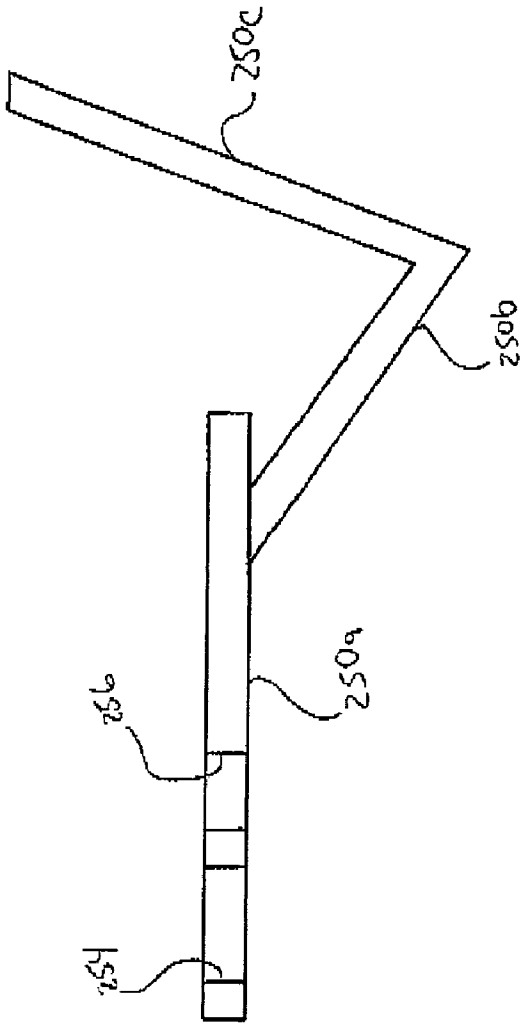

FIG. 12A

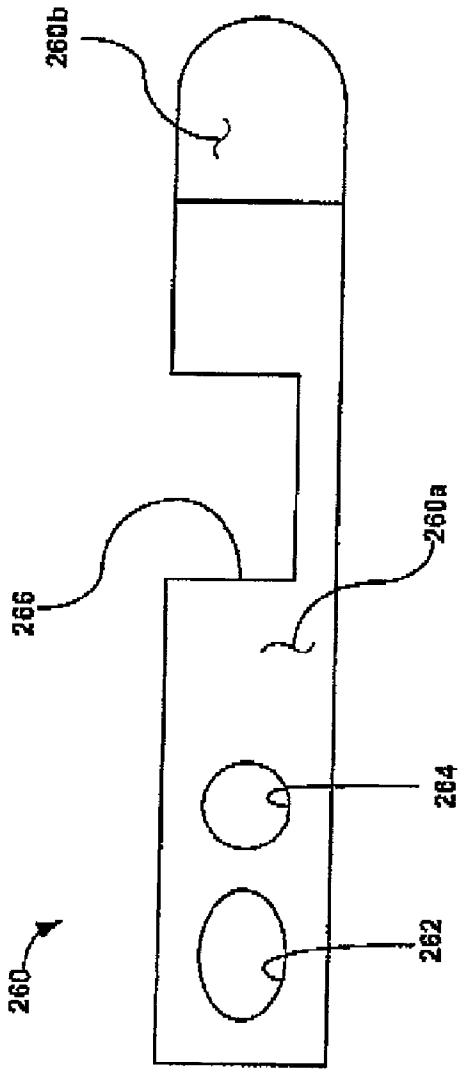

FIG. 12B

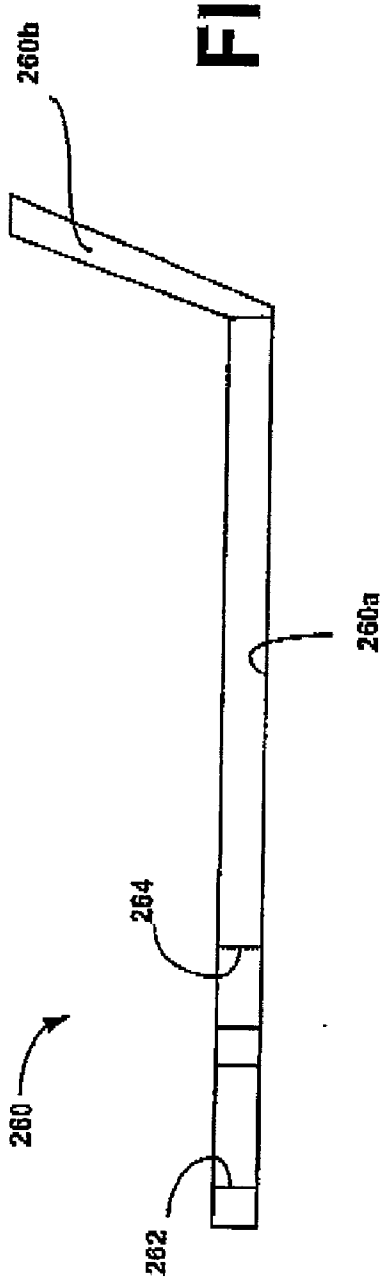

FIG. 13A

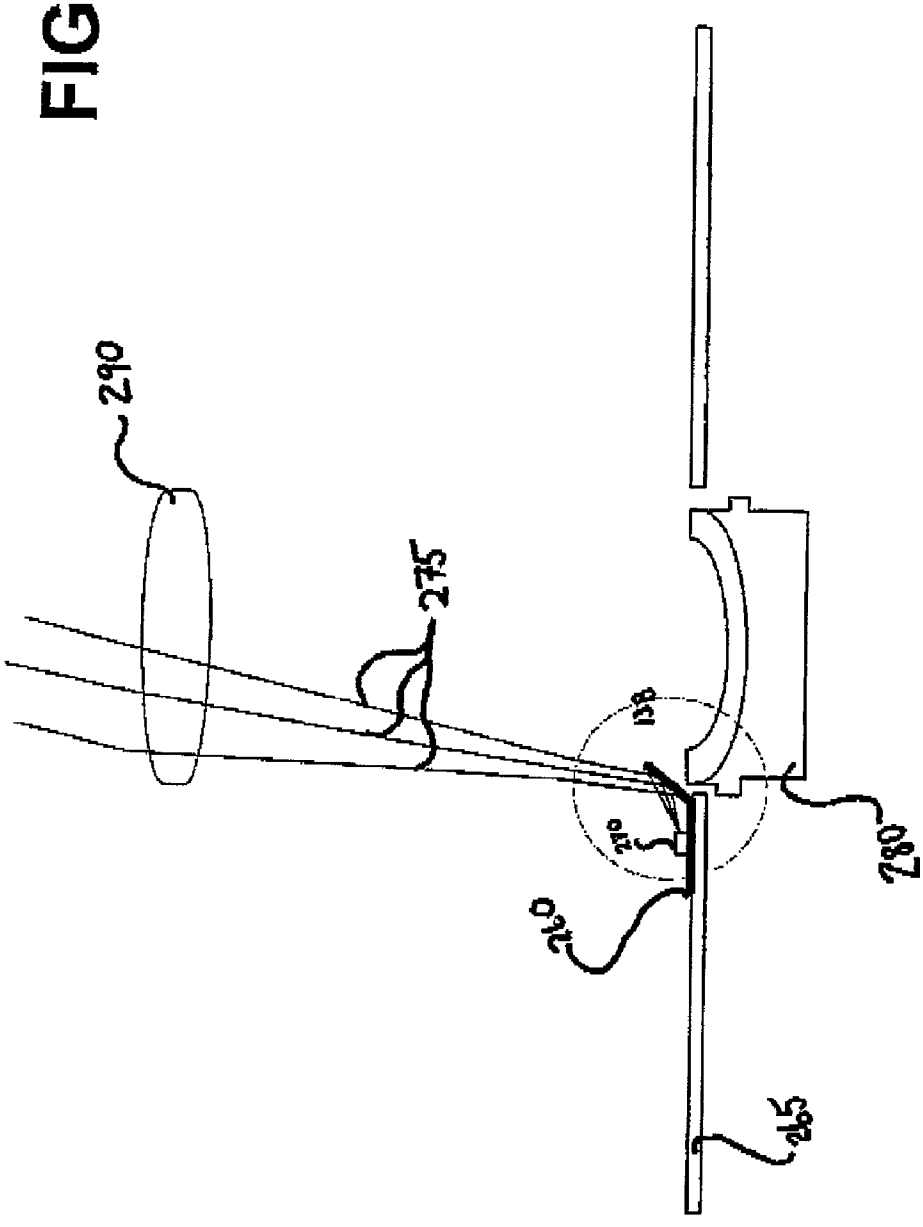

FIG. 13B

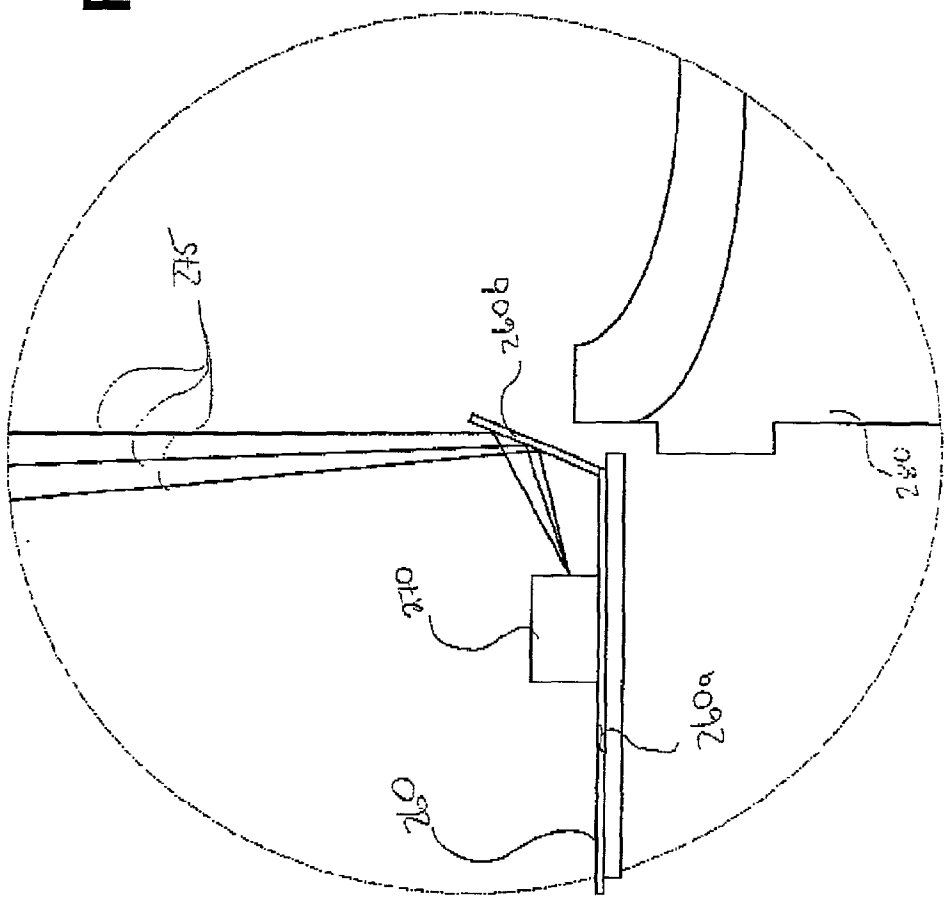

LED REFLECTOR DEVICE

FIELD OF THE INVENTION

[0001] The present invention relates to the field of cameras and, more particularly, to a reflector for directing light from an indicator located outside the viewfinder's line-of-sight into the viewfinder.

BACKGROUND OF THE INVENTION

[0002] In order to manufacture a compact and low cost camera, it is desirable that all electronic components be surface mounted to the pc-board. To provide an indicator light in the viewfinder, a surface-mount technology (SMT) LED is mounted to the camera pc-board. However, there is no direct line-of-sight from the SMT LED on the pc-board to the line-of-sight of the user using the viewfinder. Traditionally, non-SMT LEDs include a tiny bowl shaped reflector to direct light from the LED substrate. However, there exist LEDs that do not have an internal reflector. Rather, external optical solutions, such as light pipes and/or prisms have been used to direct the light from the LED to the desired viewing area. In a compact camera system using a LED, the addition of a separate light pipe or prism can be cumbersome and costly.

[0003] What is needed is an external LED reflector that directs light emitted from the LED into the viewfinder and which is low cost. These objects and others are met with the present invention.

SUMMARY OF THE INVENTION

[0004] The present invention is directed to a new and improved camera viewfinder reflector for directing light from an indicator outside the line-of-sight of the viewfinder into the viewfinder. In one embodiment the reflector is combined with an existing element of the camera assembly.

[0005] These and other objects and advantages of the present invention will become more readily apparent in the description which follows.

BRIEF DESCRIPTION OF THE DRAWINGS

[0006] The foregoing summary, as well as the following detailed description of the preferred embodiments, is better understood when read in conjunction with the appended drawings. For the purpose of illustrating the invention, there is shown in the drawings an exemplary embodiment that is presently preferred, it being understood, however, that the invention is not limited to the specific methods and instrumentality's disclosed. Additionally, like reference numerals represent like items throughout the drawings. In the drawings:

[0007] **FIG. 1** shows a perspective view from the front, right side of an exemplary camera useful with the present invention.

[0008] **FIG. 2** shows a perspective view from the rear, right side of the camera of **FIG. 1**.

[0009] **FIG. 3A** shows a top plan view of one particular embodiment of a LED reflector of the present invention.

[0010] **FIG. 3B** shows a side plan view of the LED reflector of **FIG. 4A**.

[0011] **FIG. 4A** shows a side partial view of a portion of the internal camera assembly including a viewfinder and a reflector in accordance with one embodiment of the present invention.

[0012] **FIG. 4B** shows an enlarged view of a portion of the system of **FIG. 4A**.

[0013] **FIG. 5A** shows a top plan view of a combination reflector and leaf spring in accordance with one particular embodiment of the present invention.

[0014] **FIG. 5B** shows a side plan view of the reflector of **FIG. 5A**.

[0015] **FIG. 6A** shows a top plan view of a combination reflector and leaf spring in accordance with another embodiment of the present invention.

[0016] **FIG. 6B** shows a side plan view of the reflector of **FIG. 6A**.

[0017] **FIG. 7A** shows a side partial view of a portion of the internal camera assembly including a viewfinder and a reflector in accordance with one embodiment of the present invention.

[0018] **FIG. 7B** shows an enlarged view of a portion of the system of **FIG. 7A**.

[0019] **FIG. 8** shows a side perspective exploded view of an exemplary camera viewfinder housing and reflector in accordance with one embodiment of the present invention.

[0020] **FIG. 9** shows a perspective view from the front left side of an exemplary viewfinder housing and reflector in accordance with one embodiment of the present invention.

[0021] **FIG. 10** shows a perspective view from the back side of the exemplary viewfinder housing and reflector of **FIG. 8**.

[0022] **FIG. 11A** shows a top plan view of a reflector in accordance with one particular embodiment of the present invention.

[0023] **FIG. 11B** shows a side plan view of the reflector of **FIG. 11**.

[0024] **FIG. 12A** shows a top plan view of a reflector in accordance with one particular embodiment of the present invention.

[0025] **FIG. 12B** shows a side plan view of the reflector of **FIG. 12A**.

[0026] **FIG. 13A** shows a side partial view of a portion of the internal camera assembly including a viewfinder and a reflector in accordance with one embodiment of the present invention.

[0027] **FIG. 13B** shows an enlarged view of a portion of **FIG. 13A**.

DETAILED DESCRIPTION OF THE PREFERRED EMBODIMENTS

[0028] Before explaining the disclosed embodiments of the present invention in detail, it is to be understood that the invention is not limited in its application to the details of the particular arrangement shown since the invention is capable of other embodiments. Also, the terminology used herein is for the purpose of description and not of limitation.

[0029] The present invention is directed towards a new and improved camera reflector for directing the light emitted from an LED disposed outside of a viewfinder into the line-of-sight of the viewfinder. The reflector of the present invention will now be described in connection with an exemplary camera **10** (**FIGS. 1 and 2**), which, as described herein, is a compact digital camera. However, this is not meant to be limiting. As can be seen from the present description, the reflector of the present invention is useful with any type of camera to direct light from an indicator disposed outside of the viewfinder into the viewfinder.

[0030] Referring now to **FIGS. 1 and 2**, the camera **10** includes an outer housing **11** having a front portion **12***a* and a back portion **12***b*. In the present example, the front portion **12***a* and the back portion **12***b* are made as two separate pieces to facilitate manufacturing of the housing **11**. It should be appreciated, however, that the housing may, alternatively, be comprised of any number of pieces. In a preferred embodiment, the housing **11** is constructed of a lightweight, yet rugged plastic material, but may, alternatively, be constructed of an alloy material, a metallic material or any other suitable material. Additionally, the outer surfaces of the front **12***a* and back **12***b* portions may be contoured, if desired, to improve gripping capabilities and provide a more ergonomic and aesthetically pleasing design.

[0031] Front portion **12***a* of housing **11** is adapted for connective engagement with the corresponding back portion **12***b* using conventional fastening means. The two halves form a substantially light tight connection when assembled together. In this particular example, the front and rear portions **12***a* and **12***b* are secured together using screws **14**.

[0032] The front and back portions **12***a*, **12***b* include a plurality of openings integrally formed therein. The openings are structured and disposed to allow access to the objective lens unit (opening **16**), the viewfinder assembly (openings **18***a* and **18***b*), LCD status display window **40**, function select controls **42** and external connector **30**.

[0033] The objective aperture **16** is disposed within an objective lens optical axis and is adapted for receiving and holding an objective lens cover **17**. The objective lens cover **17** is formed of a transparent material such as glass or plastic and may include an opaque portion disposed about its outer perimeter to provide some undesired light shielding capabilities. The objective aperture **16** preferably has a circular shape.

[0034] In the present camera **10**, a direct line-of-sight through the viewfinder is accommodated by front and rear viewfinder openings **18***a*, **18***b*, which are integrally formed in the front and rear housings, respectively. An eye lens optical axis can be defined through the viewfinder apertures **18***a* and **18***b*, and correspondingly, through the viewfinder lenses **21** and **22**.

[0035] A trigger button **13** is accessible through an opening disposed on the top face **15***a* of the housing **11**.

[0036] A status indicator opening **40** is provided through the rear housing **12***b*. A status LCD **41** is visible through the rear housing **12***b*. Additional openings for a number of user select buttons **42** are disposed in close proximity to the status LCD **41**. The number and orientation of the user select buttons **42** may vary to accommodate the particular camera **10** layout. Similarly, the functions provided may vary. Typical function selects include, on/off, timer on/off, etc. Additionally, the status LCD **41** may provide a variety of desired information including timer indication, battery status, number of remaining pictures, mode indicator, etc.

[0037] A mirror slide switch **60** is slideably engaged with the top face **15***a* of the housing **11**. The operation of mirror slide switch **60** is described more fully in a co-pending commonly assigned patent application entitled DUAL PURPOSE VIEWFINDER, filed on even date herewith.

[0038] Referring now to **FIGS. 3A and 3B**, there is shown a reflector **120** in accordance with one embodiment of the present invention. The reflector **120** defines a double reflection path from an indicator device, such as an LED, to the rear viewfinder lens **21**. The reflector **120** comprises a reflective material that, in the present embodiment, is stamped as a single piece from a sheet of stainless steel and machine bent to form the different reflective surfaces. However, this is not meant to be limiting. The reflector **120** may be made by other methods, and/or of several pieces. The reflector **120** may further be made using other reflective materials and/or using reflective coatings.

[0039] The reflector **120** includes a body **120***a*, a first reflector section **120***b*, a light pass section **120***c* and a second reflector section **120***d*, each section being separated from the previous section by a bend. Body **120***a* provides support for the reflector **120** and includes the connector openings **124** and **126** which permit the reflector **120** to be set in the camera **10** in a fixed relationship with the viewfinder and with a LED indicator. Light pass section **120***c* includes an aperture **122**, through which light reflected from the first reflector section **120***b* passes. Note that although the aperture **122** is shown, other means and designs of light pass section **120***c* may be employed to permit the light to pass from the first reflector section **120***b* to the second reflector section **120***d*.

[0040] Referring now to **FIGS. 4A and 4B**, there is shown a partial, side cut away view of a camera assembly **100** including a reflector in accordance with one embodiment of the present invention. The camera assembly **100** includes a reverse Galilean viewfinder system, including a negative objective lens **130** and a positive ocular lens **140**. During manufacture, a pc-board **105** is fixed around the housing for the negative objective lens **130**. The LED **110** is surface mounted to the pc-board **105**. The reflector **120** is mounted in a fixed relationship in optical alignment with the positive ocular lens **140** using connector pins or screws (not shown). The connector pins pass through the holes **124** and **126** (**FIGS. 3A and 3B**) of the reflector **120**. Other means for providing the LED reflector **120** in a fixed relationship with the lenses **130** and **140** may be used. The LED reflector **120** is mounted such that the second reflector section **120***d* is visible at the periphery of the negative objective lens **130**, without blocking the line-of-sight through the viewfinder.

[0041] In use, when the LED **110** is emitting light, the light is reflected from the bottom surface of the first reflector section **120***b*, through the aperture **122** of the light pass section **120***c* to the top surface of the second reflector section **120***d* and to the ocular lens **140**. The LED **110** may be used to provide any desired visual indication to the user, for example, when the camera is first turned on and/or while the digital camera **10** is acquiring new pictures. It can be seen that the reflector **120** of the present embodiments provides

an efficient and inexpensive means for directing light from the surface mounted LED into the viewfinder.

[0042] In another embodiment of the present invention, to further reduce the cost of the viewfinder assembly, a reflector can be fashioned from an existing component of the camera assembly. For example, camera **10** includes a novel dual-purpose viewfinder assembly that is the subject of the above referenced patent application entitled DUAL PURPOSE VIEWFINDER. The dual-purpose viewfinder of camera **10** includes a leaf spring fixed to the negative lens housing. That leaf spring may be adapted to perform the reflector functions, as will be described herein.

[0043] Referring now to **FIGS. 5A and 5B**, there is shown a combined leaf spring and reflector **150**. As with the reflector **120** (**FIGS. 3A and 3B**), the body portion **150***a* includes connector holes **154** and **156**. Likewise, the combined leaf spring/reflector **150** is formed of a body **150***a*, a first reflector section **150***b*, a light pass section **150***c* including an aperture **152** and a second reflector section **150***d*, all sections defined by the bends formed in reflector **150**. However, the reflector **150** additionally includes the leaf spring **150***e*. As described in the co-pending DUAL PURPOSE VIEWFINDER application, leaf spring **150***e* is used to bias a pivot arm of a flipping mirror in place during operation. Note that although an aperture **152** is shown, other means and designs of light pass section **150***c* may be employed to permit the light to pass from the first reflector section **150***b* to the second reflector section **150***d*.

[0044] Referring now to **FIGS. 6A and 6B**, there is shown a combined leaf spring and reflector **220** in accordance with another embodiment of the present invention. As with the above embodiments, the leaf spring/reflector **220** may be formed as a single piece punched or cut from a sheet of stainless steel or other reflective material. Alternatively, the leaf spring/reflector **220** may be formed by other processes and/or by using several pieces. The combined leaf spring/reflector **220** may additionally be made of other reflective materials and/or using reflective coatings.

[0045] The combined leaf spring/reflector **220** of the present embodiment is designed to use light emitted from the side of the LED. As such, only one reflection surface is needed. The leaf spring/reflector **220** includes a body **220***a*, a light pass section **220***b*, a reflector section **220***c* and a leaf spring **220***d*. The body **220***a* includes connector holes **224** and **226**. The light pass section **220***b* does not extend the entire height (Y-direction) of the reflector section **220***c* and functions as a narrow support arm for the reflector section **220***c*. This permits the light emitted from the side of an LED to pass by the light pass section **220***b* to the reflector section **220***c* and to the ocular lens **240**, as demonstrated in **FIGS. 7A and 7B**.

[0046] Referring now to **FIGS. 7A and 7B**, there is shown a side cut away view of a camera assembly **200** including a combined leaf spring/reflector **220**. The viewfinder assembly **200** is a reverse Galilean viewfinder including a positive ocular lens **240** and a negative objective lens **230**. The pc-board **205** surrounds the negative objective lens **230**. The SMT LED **210** is surface mounted to the pc-board **205**. The combined leaf spring/reflector **220** is mounted in a fixed relationship to the negative objective lens **230** using connector pins or screws (not shown). The connector pins pass through the holes **224** and **226** (**FIGS. 6A and 6B**) of the combined leaf spring/reflector **220**. Other means for providing the combined leaf spring/reflector **220** in a fixed relationship with the lens **230** and **240** may be used. The combined leaf spring/reflector **220** is mounted such that the reflector section **220***c* is visible at the periphery of the lens **230**, without blocking the line-of-sight through the viewfinder.

[0047] In use, light emitted from the side of the surface mounted LED **210** is reflected from the top surface of the reflector section **220***c* to the ocular lens **240** of the viewfinder assembly. In this embodiment, instead of reflecting off multiple surfaces of the reflector **220**, light passes from the side of the LED to the reflector section **220***c* without being obstructed by the narrow light pass section **220***b*. As the reflector section **220***c* is fixed in optical alignment with the ocular lens of the viewfinder, light **215** reflected from the reflector section **220***c* is visible to the user.

[0048] Referring now to FIGS. **8-10**, there is shown one particular example of a negative lens assembly **300** including the combined leaf spring/reflector **220**. Additionally, the negative lens assembly **300** includes the negative lens **310** and a negative lens housing **330**. The negative lens housing **330** includes a cavity **331** sized to receive the negative lens **310**. Additionally, the negative lens housing **330** includes an opening **332** through the sidewall of the housing **330** to permit a portion of the leaf spring/reflector **220** to pass through the housing. The connector pins **334** and **336** pass through the connector holes **224** and **226** of the reflector, respectively. Note that other means of fixing the combined leaf spring/reflector **220** to the housing **330** may be used.

[0049] When assembled, the light pass portion **220***b* passes through the opening **332** and the reflector section **220***c* is disposed in front of a portion of the upper right periphery of the negative lens. As such, the reflector section **220***c* is in fixed optical alignment with the ocular lens without obstructing the view through the viewfinder. The placement of the LED **210** (**FIG. 7A**) when the pc-board is placed is shown in shadow in **FIG. 9**. Note that in this particular embodiment, the negative lens housing **330** includes mirror supports **333***a* and **333***b*, the purpose of which is described more fully in the above referenced DUAL PURPOSE VIEWFINDER patent application. The leaf spring **220***d* is used to bias a pivot arm of a mirror (not shown) against the mirror supports **333***a* when in use. The other mirror pivot arm is maintained in place with a coil spring (additionally not shown) one end of which is connected to groove **335** of the negative lens housing **330**. The negative lens housing is connected to the rest of the viewfinder assembly using screws that pass through openings **337**. Additionally, the negative lens housing may include an opaque portion **338** disposed about its outer perimeter to provide some undesired light shielding capabilities.

[0050] Note that other forms of LED reflectors may be used and still be in accordance with the objectives of the present invention. For example, **FIGS. 11A and 11B** show another embodiment of a LED reflector **250** in accordance with the objectives of the present invention. The reflector **250** is of the single reflection type and includes a body **250***a*, a light pass section **250***b* and a reflector section **250***c*. It can be seen how the reflector **250** can be used in place of the combined leaf spring/reflector **220** in FIGS. **8-11**, if it is desired to omit the leaf spring.

[0051] Further, FIGS. **12A-12B** show yet another embodiment of a reflector which may be used in accordance with the present invention. Referring now to FIGS. **12A-13B**, there is shown a reflector **260** including only a body portion **260***a* and a reflector section **260***b*. Note that the body section **260***a* includes optional connector openings **262** for connecting the reflector **260** to the pc-board and **264**, alternatively, the body section **260***a* may be adhesively fixed or soldered to the pc-board. The body **260***a* contains a cutout portion **266** which surrounds the LED **270** on the pc-board **265**. The reflector body portion **260***a* has a lesser height than the LED **270**, thus permitting the light emitted from the side of the LED **270** to pass to the reflector section **260***b*. The reflector **260** may be stamped from a thin sheet of reflective material such as a heavy weight foil, or a thin sheet of aluminum or stainless steel. Alternatively, it can be seen that other reflective materials and/or coatings may be used. The reflector section **260***b* shall be angled and shall be long enough to extend into the line of sight of the viewfinder assembly, such as through aperture **332** of FIGS. **8-10**. As with the earlier described embodiments, a portion of the reflector section **260***b* is disposed at the periphery of the ocular lens **290**, such that it is located in a fixed optical alignment with the ocular lens **290** without obstructing the line-of-sight through the viewfinder. As such, light **275** reflected from the reflector section **260***b* will be visible at the ocular lens **290** of the camera viewfinder.

[0052] While the invention has been described with reference to certain embodiments, it will be understood by those skilled in the art that various changes may be made and equivalents may be substituted for elements thereof without departing from the scope of the invention. In addition, many modifications can be made to adapt a particular situation or material to the teachings of the invention without departing from the essential scope thereof. Therefore, it is intended that the invention not be limited to the particular embodiment disclosed as the best mode contemplated for carrying out this invention, but that the invention will include all embodiments falling within the scope of the appended claims.

What is claimed is:

1. A camera, comprising:

a viewfinder assembly including a first objective lens and a second ocular lens, said second ocular lens disposed in optical alignment with said first objective lens;

a visual indicator located outside of said viewfinder;

a reflector including at least one reflective section, at least a portion of said reflective section extending into said viewfinder in optical alignment with said second ocular lens; and

wherein light from said indicator is reflected from said reflective section to said ocular lens.

2. The camera of claim 1, wherein said visual indicator is an LED.

3. The camera of claim 2, wherein said LED is a surface mounted LED.

4. The camera of claim 3, wherein said reflector further includes at least a light pass section, wherein light from said LED passes said light pass section to said reflective section.

5. The camera of claim 4, wherein said reflector further includes at least a first reflector portion, wherein light from said LED is reflected from said first reflector portion, past said light pass section and to said reflective section.

6. The camera of claim 4, wherein said first lens and said second lens are part of a reverse Galilean viewfinder assembly.

7. The camera of claim 4, wherein said light pass section includes an opening through which light from said LED passes.

8. The camera of claim 4, wherein said light pass section has a width less than the width of said reflective section which permits light to pass said light pass section of said reflector to said reflective section.

9. The camera of claim 1, wherein said reflector further includes at least a light pass section, wherein light from said indicator passes said light pass section to said reflective section.

10. The camera of claim 9, wherein said reflector further includes at least a first reflector portion, wherein light from said indicator is reflected from said first reflector portion, past said light pass section to said reflective section.

11. A reflector for directing light from a remote indicator into the viewfinder of a camera, the reflector comprising:

a light pass section;

a reflective section, at least a portion of which is in optical alignment with the viewfinder, said reflective section including a reflection surface for reflecting light into the viewfinder; and

wherein said light pass section and said reflective section are separated by a bend.

12. The reflector of claim 11, wherein light from the remote indicator passes said light pass section to said reflective section.

13. The reflector of claim 12, wherein the indicator is a surface mounted LED.

14. The reflector of claim 13, wherein said light pass section includes an opening therethrough, said opening permitting light from said LED to pass to said reflective section.

15. The reflector of claim 12, wherein at least a portion of said light pass section has a width less than the width of said reflective section, wherein said reduced width section permits light from said LED to pass to said reflective section.

16. The reflector of claim 15, wherein said reflector is combined with an additional component of the camera.

17. The reflector of claim 16, wherein said reflector is additionally a leaf spring.

18. The reflector of claim 13, additionally including a first reflector section, wherein light from said LED is reflected from said first reflector section, past said light pass section and to said reflective section.

19. The reflector of claim 18, wherein said reflector is additionally a leaf spring.

20. A method of directing light from an indicator into the viewfinder of a camera, comprising the steps of:

(a) providing a camera, including:

a viewfinder assembly including a first objective lens and a second ocular lens, said first and said second lenses being in optical alignment;

a visual indicator located outside said viewfinder;

a reflector including a reflective section, at least a portion of which is located in optical alignment with said second ocular lens

(b) activating said visual indicator to provide a visual signal outside the viewfinder; and

(c) reflecting said visual signal from said reflective section to said second ocular lens.

21. The method of claim 20, wherein said reflector further includes a light pass section, said light pass section and said reflective section being separated by a bend.

22. The method of claim 21, wherein said visual signal is reflected past said light pass section to said reflective section.

23. The method of claim 22, wherein said reflector further includes at least a first reflector portion.

24. The method of claim 23, including the step of reflecting said visual signal off said first reflector section and past said light pass section in order to reflect said visual signal from said reflective section.

25. The method of claim 22, wherein said visual indicator is a surface mounted LED.

26. The method of claim 25, wherein said reflector is additionally a leaf spring.

* * * * *