Oct. 24, 1944. S. C. SMITH 2,361,132

CARBURETOR

Filed Sept. 23, 1937 4 Sheets-Sheet 1

FIG. 1

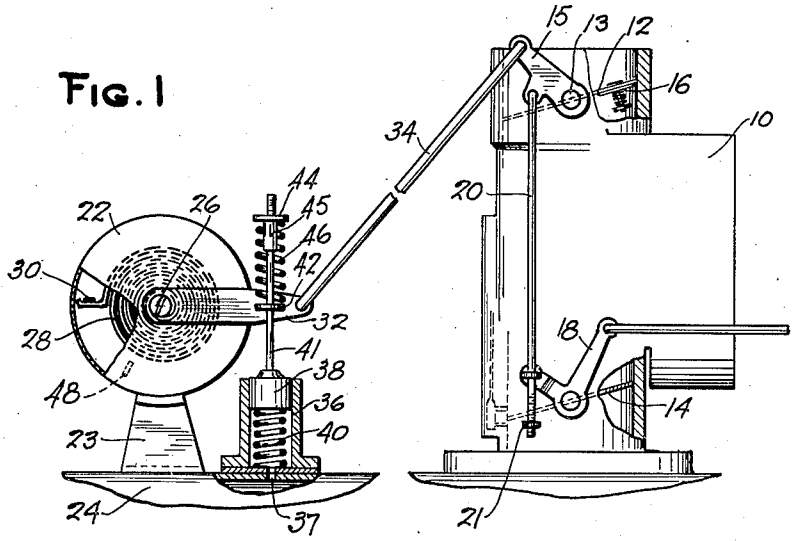

FIG. 2

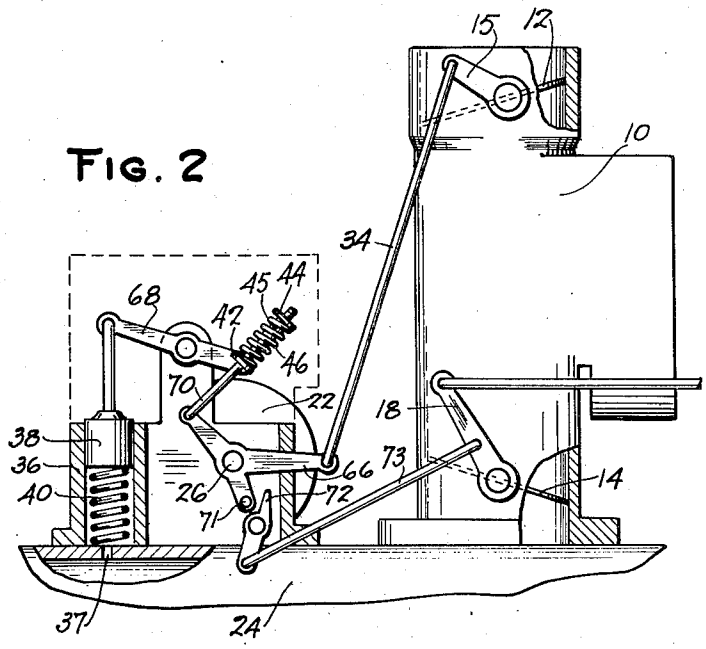

INVENTOR.
STUYVESANT C. SMITH
BY
A. L. Jr. & Grady
ATTORNEY.

Oct. 24, 1944. S. C. SMITH 2,361,132

CARBURETOR

Filed Sept. 23, 1937 4 Sheets-Sheet 2

FIG. 3

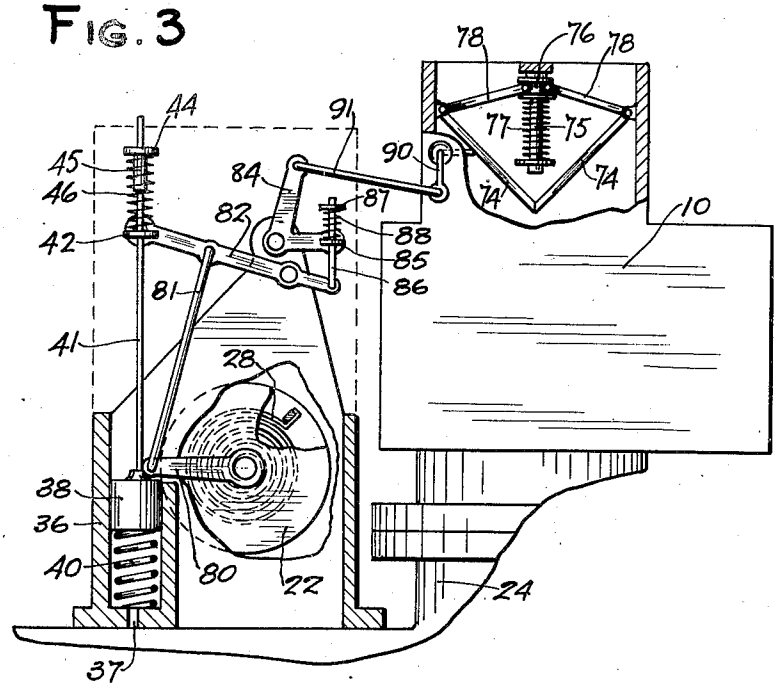

FIG. 4

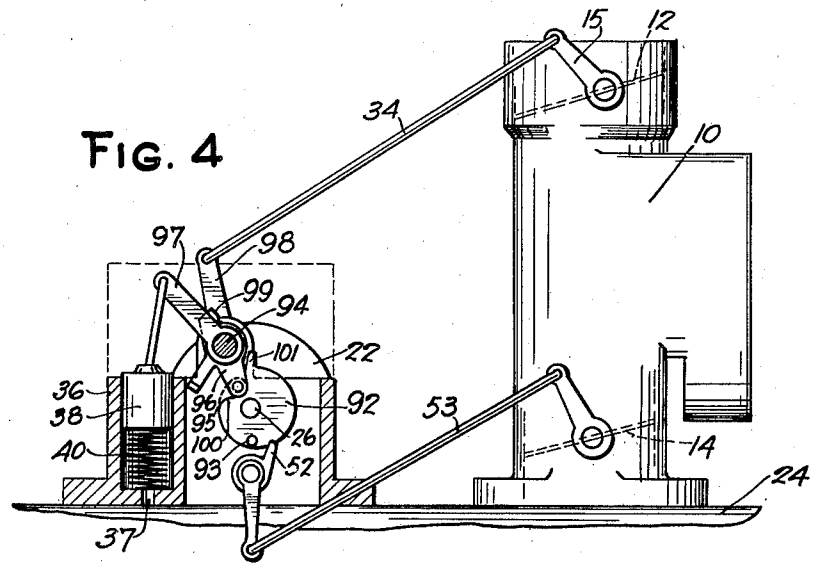

INVENTOR.
STUYVESANT C. SMITH
BY
A. L. McCrady
ATTORNEY.

Oct. 24, 1944. S. C. SMITH 2,361,132

CARBURETOR

Filed Sept. 23, 1937 4 Sheets-Sheet 3

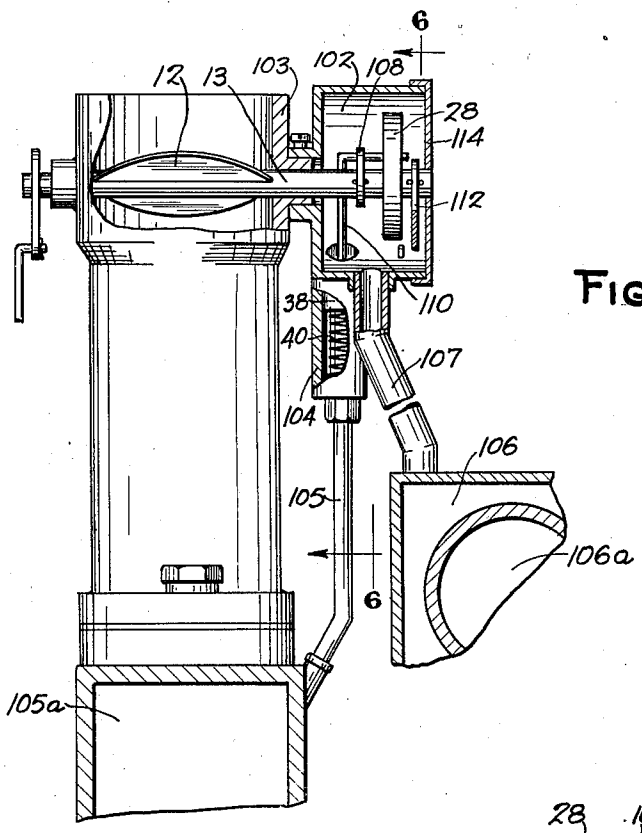

FIG. 5

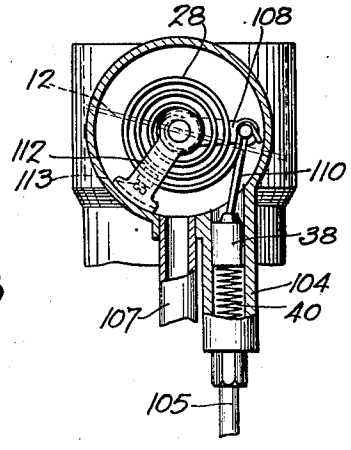

FIG. 6

INVENTOR,
STUYVESANT C. SMITH
BY
A. L. McGrady
ATTORNEY.

Oct. 24, 1944. S. C. SMITH 2,361,132

CARBURETOR

Filed Sept. 23, 1937 4 Sheets-Sheet 4

FIG. 7

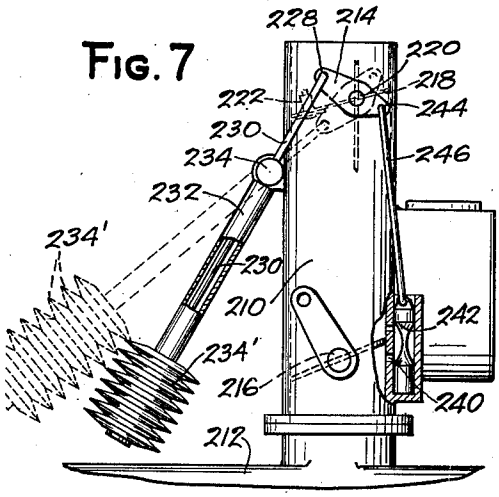

FIG. 8

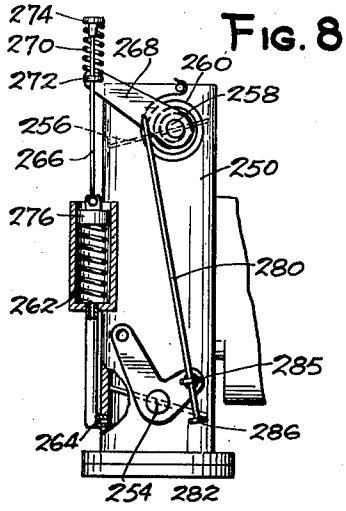

FIG. 9

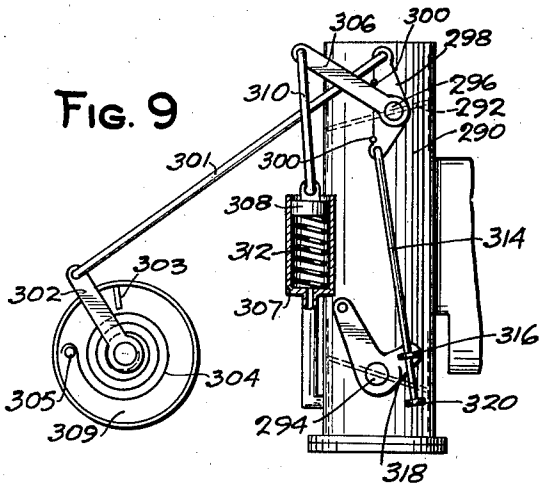

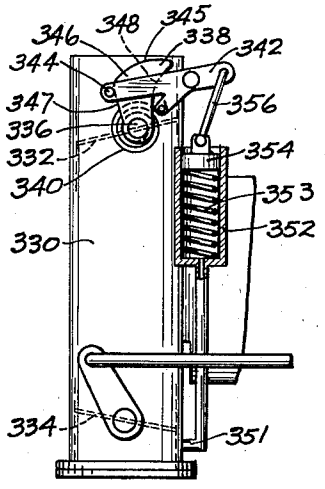

FIG. 10

FIG. 11

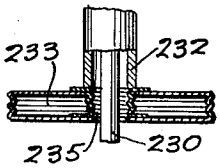

INVENTOR,
STUYVESANT C. SMITH
BY
A. Q. McGrady
ATTORNEY.

Patented Oct. 24, 1944

2,361,132

UNITED STATES PATENT OFFICE

2,361,132

CARBURETOR

Stuyvesant C. Smith, South Bend, Ind., assignor to Bendix Aviation Corporation, South Bend, Ind., a corporation of Delaware

Application September 23, 1937, Serial No. 165,248

10 Claims. (Cl. 123—119)

This invention relates to carburetors and more particularly to mechanism adapted for automatically controlling the carburetor choke.

The present application is a continuation in part of my copending applications Serial No. 641,898, filed November 9, 1932, and Serial No. 41,439, filed September 20, 1935 (division of application Serial No. 653,500, filed January 25, 1933, now issued as Smith Patent 2,030,331).

Carburetors for internal combustion engines, in order to be automatic in operation, must be adapted under all conditions to supply a fuel mixture proper for the particular stage of operation of the engine. During engine starting, when the engine is cold and cranked at a speed generally lower than its normal idling speeds, provision must be made for an excessively rich mixture, and immediately the engine commences to fire, and the speed is correspondingly increased, together with engine suction, the mixture ratio must be reduced, and thereafter controlled according to requirements and regulated accordingly. These varying conditions require tremendous and rapid changes in the various carburetor control elements to meet the requirements existing at various stages of engine operation. This invention is directed toward automatically controlling particularly the choke valve and throttle valves during engine starting and running by the utilization of the many variables in engine operation such as temperature, manifold suction, intake suction, speed, etc. in various novel and related fashions to produce substantially correct mixtures for the various engine operating conditions.

Certain embodiments of the present invention include a thermostat which is connected to the choke valve of the carburetor to control the richness of the mixture produced thereby, and a vacuum actuated piston coupled to the valve and thermostat by a spring which is tensioned to oppose the tension of the thermostat, this spring being adjustable so that the setting of the valve can be accurately controlled.

An object of the invention is to provide in a carburetor an automatic choke adapted to closely follow and respond to the variations in engine requirements by utilization of engine temperature and speed or dependent variables thereof.

A further object is to provide an automatic choke having thermo-sensitive means with mechanism whereby the effect of the thermo-sensitive means may be varied upon engine starting.

Another object is to provide in a carburetor a novel mechanism for positively "cracking" the throttle during choking.

A still further object is to provide an automatic choke adapted to operate a plain balanced choke valve.

Still another object of the invention is to provide a choke valve of simplified construction and having a minimum of parts.

A still further object is to provide a thermostatically controlled choke valve, wherein manifold vacuum is adapted to vary the effect of the thermostat.

Still another object is to provide a mechanism controllable by the carburetor throttle valve, whereby the choke can be positively opened for airing out after flooding.

Yet a further object is the provision of a thermostatic control adapted to urge a choke valve open or closed dependent on temperature, and vacuum operated mechanism for opening the choke slightly upon engine starting, and prior to warming up.

A further object is the provision of manifold vacuum sensitive means for varying thermostatic choke action.

The above and other novel features of the invention will appear more fully hereinafter from the following detailed description when taken in connection with the accompanying drawings. It is expressly understood, however, that the drawings are employed for purposes of illustration only and are not designed as a definition of the limits of the invention, reference being had for this purpose to the appended claims.

In the drawings wherein like reference numerals indicate like parts;

Figure 1 is a diagrammatic view, partly in section, showing the apparatus of the invention;

Figure 2 is a view similar to Figure 1 showing another modification;

Figure 3 shows the invention adapted to a particular carburetor;

Figure 4 is a view similar to Figure 1 showing another modification of the invention;

Figure 5 is a view of the control mechanism of the invention applied to a carburetor that is located at a point remote from the exhaust manifold;

Figure 6 is a cross sectional view taken along the line 6—6 of Figure 5 looking in the direction of the arrows.

Figure 7 is a view in elevation partly in section, of another form of the invention;

Figure 8 is a view in elevation partly in section,

of a carburetor embodying a further modified form of the invention;

Figure 9 is an elevation partly in section, of a further modified form of the invention;

Figure 10 is a view in elevation partly section, of a further modified form of the invention; and

Figure 11 is a sectional view of one form of thermostatic element adaptable for use in the modified form of Figure 7.

Referring now to the drawings in more detail, the apparatus shown in Figure 1 includes a carburetor 10 having a balanced choke valve 12 and a throttle 14. The carburetor is shown as a plain tube down draft carburetor, this type being illustrated by way of example only as the invention may be applied to other types of carburetors within the teachings of the invention. The shaft 13 of the choke valve carries a lever 15 fixed thereto and a lever 18 is fixed on the shaft of the throttle. These levers are connected by a rod 20 connected to lever 15 and coupled to lever 18 by a lost motion connection. As the throttle approaches its wide open position, lever 18 operates rod 20 to crack the choke valve so that a flooded condition of the engine can be corrected. The amount that the choke valve is opened is governed by an adjusting nut 21. The choke valve 12 is provided with a small poppet valve 16 of known construction to admit air for starting.

A thermostat casing 22 is mounted upon a suitable bracket 23 fixed upon the intake manifold of the engine adjacent to the carburetor, and a shaft 26 is journaled in the casing. A thermoresponsive element 28 is fixed to the shaft and wound therearound and is disposed so as to be heated by heat radiated from the exhaust manifold of the engine. The free end of the element bears against a stud 30 projecting from the casing. An arm 32 is fixed upon the shaft and its free end is connected to the choke lever 15 by a rod 34. When the engine is cold thermostat 28 is tensioned to rotate lever 32 and close the choke valve and to maintain it closed during starting.

A cylinder 36 is mounted upon the intake manifold 24 and communicates therewith through a suitable port 37. A piston 38 is fitted in the cylinder and urged upwardly therein by a spring 40. A rod 41 is fixed to the piston and extends through an ear 42 on lever 32 and therebeyond, the end of the rod being threaded to receive an adjusting nut 44. A sleeve 45 formed on nut 44 surrounds the rod, and a spring 46 surrounds the sleeve and bears against ear 42 and nut 44.

When it is desired to start the engine the throttle is set to starting position, that is, about one fourth open, and the choke valve is closed by the automatic mechanism just described. The engine is cranked and as soon as it begins firing piston 38 is drawn downwardly against the tension of spring 40. Sleeve 45 engages ear 42 and moves lever 32 to crack the choke valve so that the engine will not stall. Spring 46 is tensioned in opposition to the tension of the thermostat. As the engine warms up, the thermostat tension decreases and spring 46 moves lever 32 to open the choke valve more and thereby reduce the richness of the fuel mixture. As the choke valve opens the tension of spring 46 decreases as lever 32 moves away from nut 44. When the normal operating temperature of the engine is reached, thermostat 28 will have zero tension and the choke valve will be fully opened. As the thermostat is heated further, as it will be by heat radiated from the exhaust manifold of the engine, the end of the element moves away from bracket 30 and engages a second bracket 48. The thermostat is then tensioned in the opposite direction to aid spring 46 in holding the choke valve open. The particular type of thermostat shown is not new, being shown and more fully described in the copending application of S. F. Hunt, Serial No. 647,641, filed December 16, 1932. When the engine is stopped, spring 40 raises the piston and the tension of spring 46 is reduced. As the engine cools down, the thermostat is retensioned and lever 32 operated thereby to close the choke valve.

In the modification shown in Figure 2 thermostat shaft 26 carries a multiarm lever 66 and choke valve control rod 34 is connected to the free end of one of the arms. A pivoted lever 68 is connected to piston 38 and provided with an ear 42 through which a rod 70 extends. The rod 70 is connected to one of the arms of lever 66. A sleeve surrounds the rod, and a spring 46 surrounds the sleeve and bears against the ear and a nut 44 as before. A third arm of lever 66 carries a pin 71 against which a lever 72 is adapted to bear. Lever 72 is connected by rod 73 to the throttle lever and the lever 72 thus moves the pin and lever 66 to crack the choke valve when the throttle is wide open.

In the operation of the device, the thermostat is tensioned to hold the choke valve closed when the engine is cold. When the engine fires, piston 38 is drawn into the cylinder and spring 46 tensioned to oppose the tension of the thermostat to permit the choke valve 12 to open under the pressure difference on its faces. The tension of spring 46 is adjusted by nut 44 as before.

In Figure 3 I have shown the invention adapted to a carburetor having a choke valve which comprises two leaves 74 which are hinged to the side walls of the structure. A stud 75 is fixed in the carburetor midway between the leaves of the valve. A collar 76 is mounted on the stud for sliding, and is urged upwardly thereon by a spring 77. Collar 76 is grooved to receive the ends of arms 78 which are fixed on the leaves adjacent to the hinges. Air pressure on the upper face of the leaves and vacuum on the lower faces causes the leaves to swing on their hinges and the collar to move downwardly against the tension of spring 77. In the control mechanism, thermostat arm 80 is fixed on the thermostat shaft and connected by a rod 81 to a pivoted lever 82 which carries an ear 42. Piston 38 is urged upwardly in cylinder 36 by spring 40 and carries rod 41 which extends through the ear and is threaded to receive nut 44 by which spring 46 and sleeve 45 are held on the rod. A bell crank lever 84 is pivoted adjacent to lever 82 and carries an ear 85 through which rod 86 slidably projects. One end of this rod is pivotally connected to lever 82 and the other end is threaded to receive a nut 87. A spring 88 surrounds the rod and bears against ear 85 and nut 87. A crank arm 90 is journaled in the carburetor casing and connected to lever 84 by a rod 91. The free end of arm 90 bears against one of the leaves of the choke valve.

When the engine is cold and not running, thermostat 28, which is of the type shown in copending application of S. F. Hunt, Serial No. 647,641, above referred to, is tensioned to raise arm 80 and thereby rotate lever 82 clockwise on its pivot. Spring 88 is tensioned to rotate arm 84 and with it arm 90 to close the choke valve. The thermostat is tensioned sufficiently to keep the valve closed during starting of the engine. When the engine fires, piston 38 is drawn downwardly in the cylinder against the tension of spring 40 and

spring 46 is tensioned to oppose the thermostat and sleeve 45 engages and moves lever 82 counterclockwise. The tension of spring 88 is relieved and the choke valve opened slightly. Since the tension of spring 46 opposes the thermostat tension the effective force holding the valve closed is insufficient to resist the air pressure on it. The thermostat is arranged to decrease its tension as the engine warms up and the valve opens wider, being fully opened when the engine reaches normal operating temperature. As the valve opens, tension is built up in spring 75. When the engine is stopped spring 40 raises piston 38 to decrease the tension in spring 46 and as the engine cools tension is built up in the thermostat and functions to rotate arm 90 to close the valve with the aid of spring 75. Adjustments of the choke setting are made by adjusting nuts 44 and 87.

In the embodiment of the invention shown in Figure 4, the shaft of thermostat 28 carries a cam 92 upon which is mounted a pin 93. A lever 52 is pivotally mounted adjacent to the cam and connected to the throttle of the carburetor by suitable means 53. When the throttle is moved to wide open position, lever 52 engages and moves cam 92 to partially open the choke valve. A shaft 94 is journaled in the casing of the mechanism and carries a lever 96 which is fixed thereto and carries a roller 95 that engages the cam. A second lever 98 is fixed upon shaft 94 and connected by rod 34 to the choke valve 12. A lever 97 floats upon shaft 94 and is connected to piston 38. Spring 40 urges piston 38 upwardly to move lever 97 counterclockwise on shaft 94. Lever 96 carries an ear 99 which overhangs lever 97 so that the tension of spring 40 is applied to lever 98 to hold the choke valve closed.

When the engine is cold, shaft 26 is urged counterclockwise by the tension in the thermostat. A shoulder 101 on the cam strikes roller 95 to apply the thermostat tension to lever 98 to aid in keeping the choke valve closed while the engine is being cranked. Immediately the engine fires piston 38 is drawn downwardly against spring 40 and lever 97 is moved away from ear 99 so that the tension of spring 40 is removed from the valve and it is partially opened against the tension of the thermostat by the difference of air pressure on its faces. As the thermostat is heated cam 92 is rotated clockwise. Roller 95 rides over cam surface 100 to move lever 96 counterclockwise and thereby open the choke valve. When the engine reaches normal operating temperature, roller 95 engages a concentric portion of the cam to lock the choke valve open, and further rotation of the cam is without effect. Movement of lever 96 reengages ear 99 with lever 97 to lock the piston in its operated position so that it will not be vibrated by variations in pressure in the intake manifold during operation. This feature is more fully explained in S. F. Hunt Patent 2,015,752, granted October 1, 1935. When the engine is shut down, spring 40 raises piston 38 and closes the choke valve as soon as the tension in thermostat 28 rotates cam 92 back so that roller 95 engages surface 100.

In many V-type engines the intake manifolds and carburetor are located on top of the engine and the exhaust manifolds are outside and under the cylinders. In an arrangement of this kind the thermostat of the control mechanism cannot be located sufficiently close to the exhaust manifold to permit it to be operated by heat radiated therefrom. In Figures 5 and 6 I have shown a modification of the invention adapting it to an engine of this type. In this arrangement a casing 102 is mounted upon the boss 103 on the air horn of the carburetor in which choke valve shaft 13 is journaled. A cylinder 104 projects from the bottom of this casing and is connected by a pipe 105 to the intake manifold 105a of the engine. A stove 106 is placed over the exhaust manifold 106a of the engine and connected to the casing by a pipe 107 so that hot air will be conducted to the casing.

Shaft 13 projects through the casing, and thermostat element 28 is fixed to and wound around the shaft. A piston 38 fits in the cylinder and carries a rod 110 having a bent end over which the free end of the thermostat is hooked. A lever 108 floats on shaft 13 and the bent end of rod 110 extends through and is guided by the lever. A spring 40 fits in cylinder 104 and urges piston 38 upwardly to tension the thermostat so as to hold the choke valve closed when the engine is cold. A valve 112 floats upon shaft 13 and is connected to thermostat element 28 by a suitable clamp 113.

When the engine is not running and is cold, piston 38 is at the top of the cylinder and the thermostat is tensioned to hold the choke valve closed. Immediately the engine fires, piston 38 is drawn into the cylinder against the tension of spring 40 and the effective tension holding the valve closed is reduced to permit the valve to partially open. As the engine warms up, heat from the exhaust manifold heats stove 106 and hot air passes through pipe 107 into casing 102 to heat the thermostat. The casing is closed by a cover 114 which has a central opening into which the end of shaft 13 projects and through which air escapes from the casing. Thermostat 28 loses tension as it is heated and with this loss of tension, valve 12 is permitted to open more nearly wide open. Preferably the thermostat will be adjusted so that the valve will be wide open when the engine reaches its normal operating temperature. Further heating of the thermostat raises the hooked end of the element off of rod 110 and the element can move without damage to itself or to the casing. This movement of the element carries valve 112 across the opening of pipe 107 into the casing to block off the heat therefrom. When the engine is stopped spring 40 raises piston 38. As the thermostat cools, its hooked end is reengaged with rod 110 and the element is tensioned to close the valve. Valve 112 is moved to unblock pipe 107 and the apparatus is in readiness for another operation.

In Figures 1 to 4 inclusive I have shown the control mechanism as a separate unit mounted adjacent to the carburetor to simplify the figures, but it should be understood that the control mechanism may be included as an integral part of the carburetor within the teachings of the invention. Throughout the figures parts which are not materially different in construction and function bear the same reference numerals.

In the embodiment illustrated in Figure 7 a carburetor 210, secured to an intake manifold 212 has provided therein a choke valve 214 and throttle 216. The choke valve may be of the unbalanced butterfly type having a valve disc 218 mounted upon an offset shaft 220, the valve disc proper being preferably provided with an inwardly opening relief valve 222 of the poppet type as shown which is spring pressed to cover relief apertures provided thereunder in the valve disc 218. Suitably secured on the end of the valve shaft 220 is a crank 228 which is connected to

a rod **230** having sliding engagement with a tube **232** pivotally secured to the carburetor as at **234**. Fitted between the free end of the tube **232** and the end of the rod which projects beyond the free end of the tube is a series or pile of thermostatic elements **234'** which may be in the form of pairs of oppositely arranged bimetallic discs which tend to dish upon heating, thereby tending to expand. When vapor filled sylphon discs **233**, (see Figure 11), are used, there is provided a tubular sylphon core **235** to permit the passage of the rod **230** therethrough.

Preferably the rod **230** and tube **232** are so positioned as to bring the thermostatic element when cold close to a point on the motor which is quickly heated upon engine starting, which is preferably the exhaust manifold or an exhaust heated portion of the intake manifold. Upon being heated the thermostatic element not only opens the choke valve but moves to a position (shown in dotted lines in Figure 7) further from the source of heat and thereafter regulates the choke in a modified manner. Such an arrangement provides for relatively high initial choking and gradual lessening thereof upon engine starting.

Although when cold, the thermostat resiliently urges the choke closed, the unbalanced valve may open slightly against the resilient urge of the thermostat in response to engine suction created when starting and prior to any heat exchange between the manifolds and the thermostat.

For proper starting it is necessary that the mixture passage of the carburetor be opened partially so that substantial fuel charges may be drawn into the engine and for this purpose a bypass **240** around the throttle valve is provided. A spool valve **242** having a connection **246** with the choke by means of the arm **244** of the choke crank **228** is adapted to actuate the spool valve, thereby opening the bypass during choking. The contour of the spool valve may be such as to provide a gradually decreasing area of cross section for the channel as the choke moves to open position or may be otherwise constructed as to provide a different characteristic as may be desired.

The modified form shown in Figure 8 comprises the usual carburetor **250** having a choke valve **256** and a throttle **254**. To automatically regulate the choke valve, the same comprises an unbalanced valve disc **256** mounted on a shaft **258** which is thermostatically controlled by the spiral bimetallic thermostatic element **260**. To give the desired choking effect during cranking the valve **256** necessarily must be substantially locked closed and for this purpose the thermostatic element is made sufficiently stiff and placed under the required tension.

Since the tension required to produce the desired choking effect at cold motor cranking speeds is greater than that required once the engine commences to operate, a vacuum responsive motor **262**, connected either to the carburetor mixture passage on the engine side of the throttle valve as at **264** or to the intake manifold, is provided together with a connection **266**, through resilient means to a lever arm **268** mounted upon the choke shaft **258**. As illustrated the resilient means may consist of a spring **270** threaded upon the rod **266** so as to bear upon a swivel collar **272** secured to the lever **268** and upon an adjustable nut **274** upon the end of the rod. Upon high manifold vacuum, the piston **276** will be drawn downwardly within the suction motor **262** resiliently tending to open the choke valve **256**. By properly balancing the resiliency and tension of the spring **270** and the thermostatic coil **260**, an operating combination results which is capable of supplying the proper mixture to the engine under substantially all circumstances, and by further proper selection of the spring characteristics and by proper adjustment, the control may be applied to a choke utilizing a common balanced butterfly valve, of the same general type as the throttle valve **254**.

Since it often occurs that an engine is cranked with the ignition circuit open by mistake, or for some reason or other the engine becomes flooded, there may be provided a connection between the choke valve and throttle so that the choke valve can be positively opened to air the motor out and discharge excess fuel into the exhaust passages. For this purpose there is illustrated a connecting link **280** pivotally connected between the lever **268** on the choke valve and the crank **284** on the throttle valve **254**. So that ordinarily the operation of the throttle may not disturb the automatic operation of the choke valve, the link **280** is preferably connected to the throttle by a lost motion connection as shown wherein the rod or link **280** slidably engages a swivel collar **285** secured to the crank **284**, and provided at its end with a collar **286**, which is adapted to engage the swivel collar upon opening the throttle wide, so that further movement may open the choke.

Referring to the modification of Figure 9, there is shown a downdraft carburetor **290** having an unbalanced choke valve **292** and throttle **294**. Secured to the choke valve shaft **296** is a double crank member **298**, operatively connected through a link **301** to a crank **302** actuated by a thermostat **304**. A lever **306**, pivoted on the choke shaft **296** is adapted to operate between spaced pins **300** on the crank member **298**, thereby providing a lost motion connection. A vacuum operated cylinder **307** having a piston **308** is connected to the intake manifold preferably at any point on the engine side of the throttle valve **294**, and is adapted through the piston **308** and link **310** to actuate the lever **306** during the high vacuum which will in turn engage the lower stop pin **300** and positively open the choke a small amount. At such times as substantially no vacuum exists in the manifold the piston may take the upper position shown by reason of the urge of spring **312** thereby causing the lever **306** to engage the upper stop pin **300** and urge the choke closed.

The thermostatic bimetallic element **304** is preferably secured at its inner end so as to rotate the crank **302**, and at its outer end is adapted to hook upon a stud **305**. Upon heating of the element, due to its position adjacent some member of the internal combustion engine such as the exhaust manifold, tension tending to close the choke valve is gradually released due to the coiling action of the thermostat element, and when the element becomes hot enough, the outer end of the element may leave the stud **305** and coil in a clockwise direction until it strikes the abutment **303**, whereupon the thermostat element will commence to urge the choke valve to an open position. It will be readily appreciated that for adjustment purposes the stud **305** and stop **303** may be secured to a revolvable shell **309** which may be frictionally or otherwise secured in any position to adjust the tension on the thermostatic ribbon or element.

As in the modification of Figure 8, the carburetor **290** may have a means for positively opening the choke by extreme movement of the

throttle valve, there being provided for this purpose, a rod 314 pivotally secured in one end of the double crank 298, and slidably engaging a swivel collar 316 on the crank 318 controlling the throttle. A fixed collar 320 on the end of the rod serves to engage the swivel collar upon opening the throttle wide, thereby allowing the choke valve to be opened by extreme movement of the throttle valve.

The further modified form of Figure 10 is also illustrated as adapted to a downdraft carburetor 330 having a choke valve 332 and throttle 334. The choke valve may be of the unbalanced type and is carried on a shaft 336 to which is also secured a cam 338 and spiral thermostatic element 340. A pivoted lever 342 having preferably a roller follower 344 is adapted to engage the outer cam surface 346, and engage the inner cam surface 348 by the spur 350 on the lever, to which is also secured the outer end of the thermostatic element 340. By the use of a suction motor connected to the intake manifold as at 351, which motor comprises a cylinder 352 and piston 354, actuation of the lever 342 through the connecting link 356 takes place in accordance with the manifold vacuum, except as modified by the heat of the resilient thermostatic element, which is exposed to a source of heat resulting either directly or indirectly from engine operation.

The outer cam surface 346 has a steep nearly radial portion 347 and a low pitched spiral portion 345 which are adapted to engage the roller follower 344. The steep portion 347 acts as a choke lock preventing the choke from opening due to suction on the unbalanced valve, without the aid of the suction motor 352, the mechanical advantage of the steep cam surface when driving the roller being too low to permit choke opening due to suction alone. The generally spiral section 348 provides a means for determining the position of the lever 342 once the choke has opened, and thereafter may regulate the tension on the thermostat since movement of the lever, through the spur 350 varies the position of the outer end of the thermostatic ribbon. Should the choke for any reason stick after the engine commences to run, manifold vacuum acting on the piston 354 will tend to rock the lever, urging the spur 350 against the inner cam surface 348 thereafter forcing the choke open.

Operation of the device illustrated in Figure 10 produces a change in thermostat adjustment with changes in manifold vacuum. For example, upon sudden opening of the throttle, a cold motor is often prone to back fire due to the temporary existence of too lean a mixture, but with the structure shown, upon sudden drop in manifold vacuum as when the throttle is quickly opened, the piston 354 is released, allowing the spring 353 to urge the piston upward and rotate the lever 342 counterclockwise thereby instantaneously tightening the thermostat ribbon, and momentarily increasing the tendency to choke, which as a result enriches the mixture and tends to compensate for the sudden variations in throttle opening. It of course will be understood that the low pitch cam surface 345 regulates at all times the maximum tension which may be applied to the thermostatic ribbon for any given throttle position, and that the above operation occurs only at such times as when manifold vacuum is sufficiently high to actually remove the roller from the cam contour. This action may be termed an economizer action, for in normal steady operation, the choke is offered little resistance to opening permitting economical operation while upon sudden departure from steady operation, the resistance is instantly increased.

Though several embodiments of the invention have been illustrated and described, it is to be understood that the invention is not limited thereto but may be embodied in various mechanical forms. For example, various elements of the modifications may be interchanged, as one may be found more desirable in a specific case than another. As many such changes in construction and arrangement of parts may be made without departing from the spirit of the invention, as will be apparent to those skilled in the art, reference will be had to the appended claims for a definition of the limits of the invention.

Features not claimed herein are claimed in my copending application, Serial No. 39,531, filed September 7, 1935, as a division of my copending application Serial No. 641,898, above referred to.

I claim:

1. In a carburetor, an unbalanced choke valve, resilient thermostatic means for urging said valve towards closed position, and a manifold vacuum operated piston having a resilient operating connection with said valve for urging said valve toward open position against the urge of said thermostatic means.

2. In a carburetor, a choke valve, a throttle valve, a manifold vacuum responsive motor, resilient thermostatic means for urging said choke valve closed, a resilient connection between said motor and choke valve for urging said choke valve open upon high vacuum in said motor, and means for positively opening said choke valve upon movement of said throttle valve to suostantially wide open position.

3. In a carburetor choke, an unbalanced butterfly choke valve, thermostatic means forcibly urging said valve closed when cold, and forcibly urging said valve open when heated, and manifold vacuum sensitive means operatively connected to said valve for positively opening said valve upon existence of normal operating vacuum in the manifold.

4. In a carburetor, a pressure responsive choke valve, a throttle valve, thermostatic means for closing and opening said choke valve, manifold vacuum sensitive means including a cylinder and a piston for opening said choke valve, and connecting means between said choke valve and throttle valve to open said choke valve when said throttle valve is opened substantially wide.

5. A control mechanism for an internal combustion engine carburetor having a choke valve and a throttle, comprising a thermostat connected to the choke valve and tensioned when cold to hold the choke valve closed for starting and to permit the same to fully open when the engine reaches a predetermined temperature, a piston actuated by vacuum posterior to the throttle when the engine is running, and yieldable means connecting the piston to the valve in opposition to the thermostat.

6. A control mechanism for an internal combustion engine carburetor having a choke valve and a throttle, comprising a shaft, a lever fixed on the shaft, means connecting the lever to the choke valve, a thermostat connected to the shaft and arranged to rotate the same to close the choke valve when the engine is cold, an ear on the lever, a rod extending through the ear, a spring fixed on the rod and bearing against the ear, and means connected to the rod and actuated

by vacuum posterior to the throttle for tensioning said spring to oppose the thermostat and open the choke valve.

7. A carburetor having a choke valve, a carbureting passage, a throttle valve controlling the carbureting passage, temperature responsive means adapted to urge the choke valve toward the closed position when cold and to permit the choke valve to fully open when heated to a predetermined temperature, pressure responsive means communicating with the carbureting passage posterior to the throttle valve, and yielding means connecting the pressure responsive means to the temperature responsive means.

8. A carburetor having an air inlet passage, a pressure responsive choke valve controlling the air inlet passage, a carbureting passage, a throttle valve controlling the carbureting passage, temperature responsive means controlling the choke valve, fluid pressure actuated means communicating with the carbureting passage posterior to the throttle valve to modify the action of the temperature responsive means, and yielding means between the temperature responsive means and the fluid pressure actuated means.

9. A control mechanism for a carburetor having an air inlet passage and a carbureting passage, a pressure responsive choke valve controlling the air inlet passage, a throttle valve controlling the carbureting passage, temperature responsive means adapted to exert a force when cold and to discontinue said force when heated to a predetermined temperature, connecting means between the temperature responsive means and the choke valve, and pressure responsive means yieldingly connected to said connecting means.

10. A control mechanism for a carburetor having an air inlet passage and a carbureting passage, a pressure responsive choke valve controlling the air inlet passage, a throttle valve controlling the carbureting passage, temperature responsive means adapted to exert a force when cold and to discontinue said force when heated to a predetermined temperature, connecting means between the temperature responsive means and the choke valve, and pressure responsive means communicating with the carbureting passage beyond the throttle valve and yieldingly connected with the connecting means to modify the action of the temperature responsive means.

STUYVESANT C. SMITH.