May 31, 1932. H. V. MARSH 1,860,547

PLACARD

Filed Jan. 18, 1929

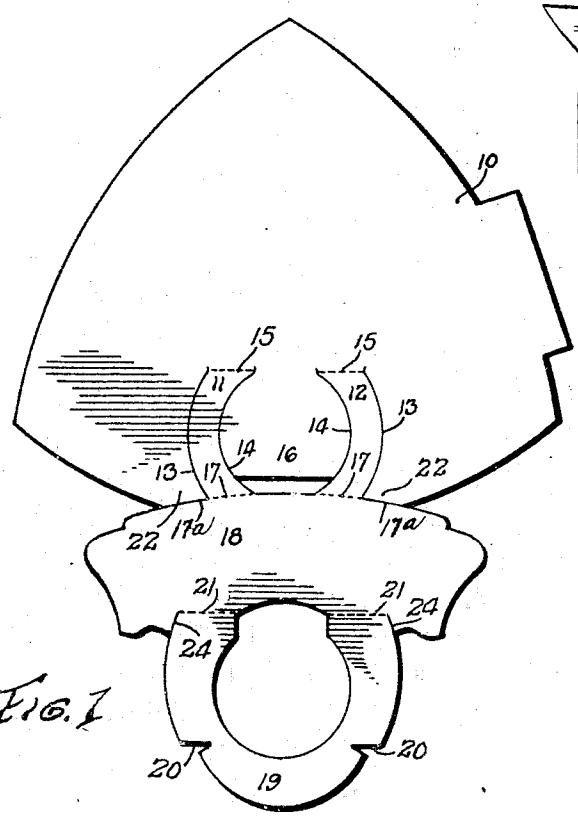

FIG. 1

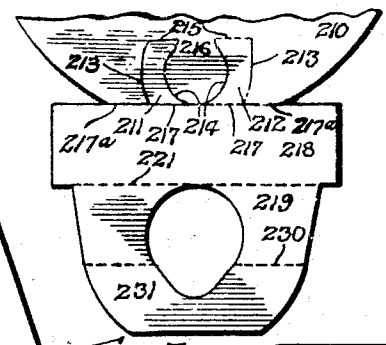

FIG. 5

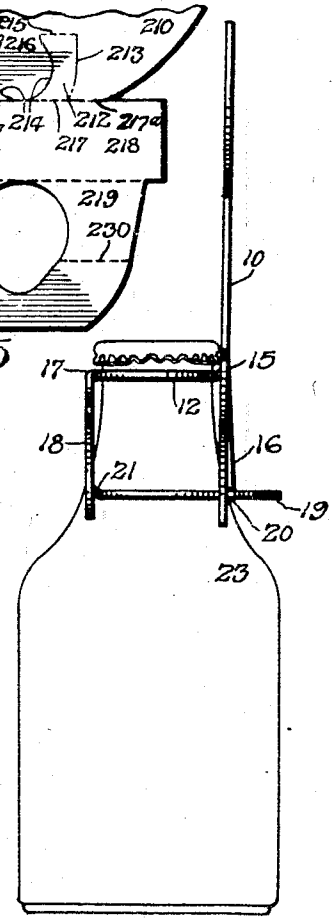

FIG. 3

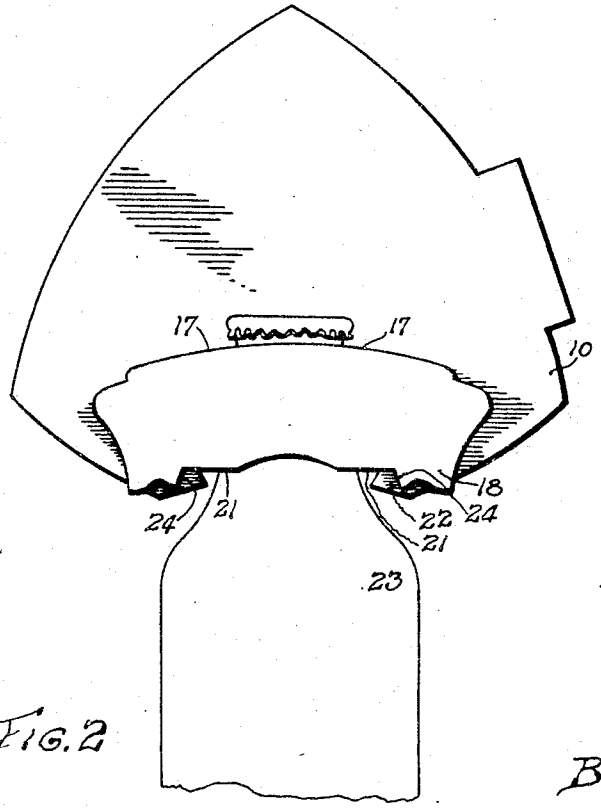

FIG. 2

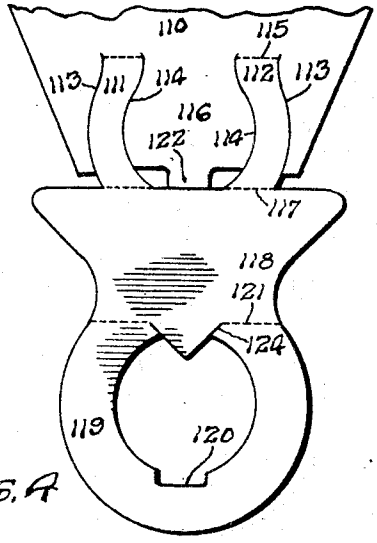

FIG. 4

INVENTOR
Harry V. Marsh

BY [signature]
ATTY.

Patented May 31, 1932 1,860,547

UNITED STATES PATENT OFFICE

HARRY V. MARSH, OF CHICAGO, ILLINOIS

PLACARD

Application filed January 18, 1929. Serial No. 333,338.

The present invention relates to a placard adapted to be employed upon a bottle having a tapering neck, and has particularly to do with the structural features whereby such placard is maintained in an upright position for best displaying the subject matter appearing thereupon.

Among the objects of the present invention are included the following:

An improved placard adapted to be held upon a bottle neck by a plurality of supporting members.

A unique combination of a holding means with a placard whereby the display matter upon such placard is held upright in two spread apart vertical planes.

Unique means interlocking the parts of the placard whereby the relation predetermined for the parts thereof is maintained during display.

Novel structural features whereby a placard may be placed about a bottle and held in position thereon fully displaying all of the subject matter imprinted thereupon.

These, and such other objects as may hereinafter appear, are obtained by the novel construction, unique combination, and improved arrangement of the several parts of the placard, two forms of which are illustrated in the accompanying single sheet of drawings, in which

Figure 1 is a plan view of a blank for forming the placard;

Figure 2 is a front view thereof showing its application about a bottle;

Figure 3 is a side elevation of the placard shown in Figure 2;

Figure 4 is a fragmentary plan view of a blank showing a modified form of section aligning means; and

Figure 5 is a reduced fragmentary plan of a slight modification of the invention.

Like reference characters are used to designate similar parts in the drawings and in the description of the invention which is hereinafter given.

Reference now should be had to Figures 1, 2 and 3, which figures should be read conjointly.

The main body of the blank is indicated by the numeral 10. This forms the main section of the placard and may be of any suitable size or configuration. It may be adapted so far as its periphery is concerned to be cut to suit the advertising material or illustration thereupon.

Extending into the body of the placard or blank are two arms 11 and 12 which are formed by slits 13 and 14 at their opposite sides. The upper ends of slits 13 and 14 are hinged, being separated from body 10 by score lines 15 which permit of the arms 11 and 12 being projected forwardly. There is integral with and projecting from the body 10, intermediate arms 11 and 12, a small section of material 16 which engages the bottle on which the placard is used to assist in maintaining the body 10 upright upon such bottle about which the placard may be used.

The end of the member 16 may be clipped off as a precaution to insure the proper assembly of the device and a quick understanding of the user whereby he may convert the blank shown in Figure 1 into the placard shown in Figures 2 and 3.

Arms 11 and 12, at their lower ends, terminate in transverse score lines 17, said scores dividing said arms from a smaller display section 18 forming a part of the device. Said score lines 17 are in alignment with the top edge of section 18 which extends therebetween, and also in alignment with slits 17*a* which divide the blank from which the device is made into the parts 10 and 18, such slits running from the periphery of the device to the outer ends of score lines 17, so that when the arms 11 and 12 are projected outwardly until horizontal, the section 10 being vertical, the section 18 may be articulated with respect to said arms 11 and 12 also to provide a vertical display face generally smaller than the face of body 10.

Projecting downwardly from the body 18 is a generally circular portion 19 which is adapted to extend around bottle 23, in a horizontal plane beneath and parallel to that occupied by the arms 11 and 12. The inner part of circular portion adjacent to body 18 is enlarged to facilitate the ready attachment of the device to a bottle, and at its outer pe-

riphery instead of being regular, it is niched as indicated at 20 and at opposite sides, to receive, when assembled for use, the points 22, upon the body 10 and which are formed thereon by the intersection of slits 13 and 17*a*.

Section 19, as is previously indicated, is bent inwardly in a plane below that occupied by arms 11 and 12, the niches 20 being filled by the points 22 so that the section 10 and the section 18, both employed for advertising purposes, will be held in a substantially vertical position and particularly so when a bottle 23 is inserted upwardly through the opening surrounded by the circular portion 19 and through the opening intermediate the arms 11 and 12, and sections 10 and 18.

The diameter of circular portion 19 is generally less than the width of the face of member 18. Intermediate the two, there are aligned scores 21, the inner and adjacent ends of which terminate in the periphery of the central lower arcuate edge of member 18. The outer ends of scores 21 terminate in slits 24 in alignment with the periphery of member 19 and dividing the outer and lower sections of member 18 therefrom. By the arrangement shown, the lower edges of member 18 are allowed to extend downwardly beyond the scores 21 hingedly connecting parts 18 and 19.

A second form of interlock between the parts is disclosed in Figure 4. The main body of the device illustrated in said figure is indicated 110, the arms 111 and 112, the slits forming said arms 113 and 114, the scores at the top of said arms 115 and the section between said arms 116. Projecting from the section 116 is a finger 122.

The scores separating the arms 111 and 112 from the body 118 are designated 117, the material between sections 110 and 118 being cut away as shown.

The lower bottle encircling member is designated 119, and it is separated from the part 110 by the scores 121 and slits 124. The central bottom edge of the material of member 118 is defined by said slits 124 and may be continued to a point where said slits would intersect, if extended. In said member 119, is a slot or niche 120 into which the finger 122 is adapted to be inserted when the device is in assembled relation. This device, like that illustrated in Figures 1, 2 and 3, is adapted to be assembled in such a manner that it is always maintained with two vertical spaced apart parallel display surfaces 110 and 118, there being an interlock between the several parts because of the insertion into slot or niche 120 of finger 122 whereby such vertical spaced apart parallel relation between parts 110 and 118 is maintained at all times.

In Figure 5, is a slight modification of the invention. The parts 210, 211, 212, 213, 214, 215, 216, 217, 217*a*, 218, 219, and 221 correspond to the parts 10, 11, 12, 13, 14, 15, 16, 17, 17*a*, 18, 19, and 21 of Figure 1, except that extension 219 is slightly more extensive than extension 19 and has two horizontal scores 230 thereacross, the inner ends of said scores 230 across member 219 terminating in the opening therein, which opening is somewhat elliptical in configuration. In assembly, the flap 231 which comprises that part of member 219 below the scores 230 is turned vertically upward and inserted between the section 216 and the lower portion of body 210, with said section 216 at the front thereof and the body 210 at the back thereof. The outer edge of part 231 is preferably straight to engage, in the assembled relation, the underside of members 211 and 212. This provides a different type of interlock from that illustrated in the preceding figures and one equally as efficient.

I claim:

1. A placard comprising a display body, a supporting member having a top section adapted to be horizontally disposed and taken from the material of said display body, a second display section separate from and parallel to said body display section, said second display section being of greater width than the supporting members of the device, and a bottom supporting member depending from said second display section and parallel to said top section, said body engaging said bottom member to interlock therewith, and to maintain said device in an assembled relation.

2. A placard comprising a main display body adapted to be secured to a bottle, a supporting member therefor having as a part thereof an extension rigid with said display body, arms hinged to said body at the side of said extension and extending about the neck of said bottle, another supporting section parallel to said arms and also extending about said bottle, and a secondary display section intermediate said arms and said other supporting section.

3. A placard comprising a display body adapted to be disposed upon a bottle and having an extension rigid therewith, a supporting member projecting from substantially the central portion of said body and at the sides of said extension adapted to be horizontally disposed about the neck of said bottle and hingedly connected to said body remote from its edges, a secondary display section spaced apart and parallel to said body display section, and a bottom supporting section parallel to said projecting supporting member and also surrounding said bottle.

4. A placard having a display body adapted to be disposed upon a bottle, and a supporting member therefor comprising opposed arms horizontally disposed about the neck of said bottle and separated from said display body by pairs of substantially parallel slits through said body remote from its edges, a display section parallel to said display

body section, a bottom section parallel to said opposed arms and also surrounding said bottle, and an extension from said display body engaging said bottom section.

5. A placard comprising a body adapted to be disposed at one side of a bottle, a depending supporting member having a top section adapted to be horizontally disposed about the neck of said bottle and hingedly connected to said body remote from its edges, a secondary display section adapted to be disposed at the other side of said bottle and parallel to said body section, a bottom section parallel to said top section and also surrounding said bottle, said body having a part engaging said bottom section to interlock therewith to maintain said device in an assembled relation with said body and display section vertically parallel and said bottle surrounding members in spaced apart horizontal parallel position.

6. A placard having a centrally disposed rigid extension and a projecting supporting member at the side of said extension adapted to surround the neck of a bottle and comprising a horizontal section hingedly connected to the body of said placard remote from its edges, a display section parallel to said body section and adapted to occupy a portion of the same horizontal plane occupied by said placard, and a bottom supporting member parallel to said projecting supporting member and having a section arranged to receive a part of said body to interlock therewith to maintain said device in assembled relation.

7. A placard comprising a body adapted to be disposed at one side of a bottle and above its body, a supporting member having a top section adapted to be horizontally disposed about the neck of said bottle, a display section adapted to be disposed at the other side of said bottle and parallel to said body section and above the body of the bottle, and a bottom supporting member parallel to said top member and also surrounding the neck of said bottle, said body having corners and said bottom supporting member slits receiving said corners to maintain said placard and supporting member.

HARRY V. MARSH.