March 29, 1932. S. TESE 1,851,122

BLASTING CARTRIDGE

Filed Oct. 29, 1931.

Fig. 1.

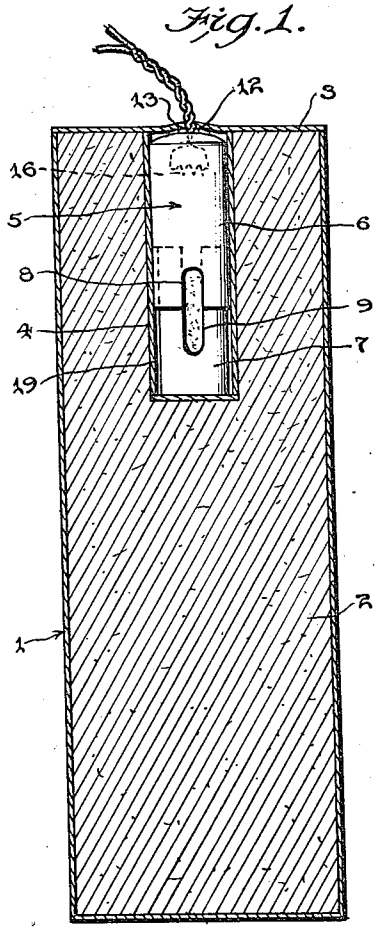

Fig. 2.

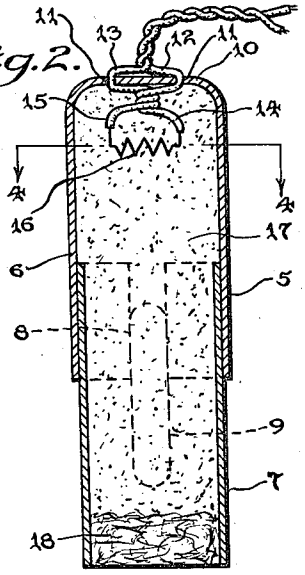

Fig. 3.

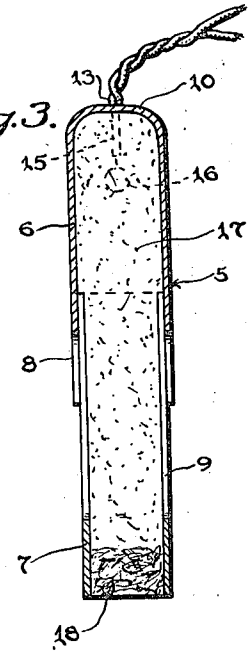

Fig. 4.

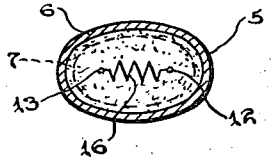

Inventor

Stephen Tese,

By

Attorney

Patented Mar. 29, 1932 1,851,122

UNITED STATES PATENT OFFICE

STEPHEN TESE, OF ROCHESTER, NEW YORK, ASSIGNOR OF ONE-HALF TO FRED TERRIGINO, OF ROCHESTER, NEW YORK

BLASTING CARTRIDGE

Application filed October 29, 1931. Serial No. 571,916.

The invention relates to a dynamite exploding device for blasting cartridges.

The object of the present invention is to improve the construction of dynamite exploding devices for blasting cartridges and to provide a simple, practical and efficient dynamite exploding device of strong, durable and comparatively inexpensive construction adapted to be readily applied to a dynamite blasting cartridge and capable of being exploded by an ordinary battery.

A further object of the invention is to provide a dynamite exploding device of this character in which there will be no liability of the battery wires accidentally pulling out of the exploding device or affecting the arrangement of the terminals of the wire within the exploding device and which will facilitate arrangement of the terminals of the battery wires within the dynamite exploding device so as to insure a positive exploding of the same when the battery circuit is closed.

With these and other objects in view, the invention consists in the construction and novel combination and arrangement of parts hereinafter fully described, illustrated in the accompanying drawings, and set forth in the claims hereto appended, it being understood that various changes in the form, proportion, and minor details of construction, within the scope of the claims, may be resorted to without departing from the spirit of the invention or sacrificing any of the advantages thereof.

In the drawings:

Figure 1 is a longitudinal sectional view of a blasting cartridge provided with a dynamite exploding device constructed in accordance with this invention, the dynamite exploding device being shown in elevation with the paper covering thereof in section.

Fig. 2 is an enlarged longitudinal sectional view of the dynamite exploding device.

Fig. 3 is a longitudinal sectional view of the dynamite exploding device taken at right angles to Fig. 2.

Fig. 4 is a transverse sectional view on the line 4—4 of Fig. 2.

In the accompanying drawings, in which is illustrated the preferred embodiment of the invention, the blasting cartridge comprises a container 1 constructed of stiff waterproof paper or other suitable material and containing a charge of dynamite 2 to which the paper container is glued both at the sides and at the top and bottom. The top wall 3 of the container 1 is adapted to retain in a socket or hole 4 the dynamite exploding device of the present invention.

The hole 4 in the dynamite, which may be made by any suitable means, entends downwardly from the top of the stick or charge, as clearly illustrated in Fig. 1 of the drawings, and is approximately elliptical in cross section to conform to the configuration of the casing 5 of the dynamite exploding device. By gluing the container to the dynamite stick and also gluing the top of the container over the upper end of the stick and the upper end of the casing of the dynamite exploding device, the latter is securely retained in the hole in the dynamite.

The casing 5, which may be constructed of brass, copper, steel or any other suitable material, is composed of two telescoping sections 6 and 7 provided in its sides with registering slots 8 and 9 forming openings in the sides of the casing 5 when the sections are assembled. The casing is arranged vertically in the stick or charge at the top thereof and the upper section 6 of the tubular casing 5 is provided with a top wall 10, while the lower section 7 is open at the upper and lower ends.

The top wall 10 of the upper section is provided with spaced perforations 11 through which pass insulated battery wires 12 and 13 which are twisted or knotted at the inner face of the top wall 10 to form a stop to limit

the outward movement of the insulated electric wires. The terminals 14 and 15 of the battery wires 12 and 13 are bared below the top wall 10 and the said bared terminals are connected by a resistance piece 16 of iron, steel, or other suitable material, which may be secured to the bared terminals 14 and 15 by any suitable means, such as twisting the ends of the resistance around the bared terminals or by soldering the terminals 14 and 15 to the resistance, but any other suitable attaching means may be employed. The resistance, which is disposed transversely of the upper section of the casing, is arranged along the major axis of the elliptical cross sectional formation of the casing.

After the terminals of the wires 12 and 13 and the connecting resistance have been properly prepared, the wires are drawn upwardly into proper position adjacent the top wall of the upper section of the casing, and the wires are then twisted exteriorly of the casing, as clearly shown in Figs. 2 and 3 of the drawings, whereby the wires are firmly connected to the casing and the interiorly arranged terminals securely held against movement independently of the casing. The telescoping sections also facilitate the placing of the wires and the resistance in proper position within the casing 5, as the wires may be readily seen from the opening or end of the upper section. The sections are assembled after the wires have been placed in position.

The casing is filled with a suitable detonating powder 17, which may be the same as that described in my co-pending application, filed on or about the 9th day of June, 1931, Serial No. 543,189, but any suitable powder adapted to be ignited by the resistance and electric wires may, of course, be employed for exploding the charge of dynamite. The openings formed by the slots of the telescoping sections of the casing afford a passageway for the fire resulting from igniting the powder. Also, the open lower end which is filled with a packing 18 of cotton or other suitable material, will afford a passageway for the fire or flame resulting from igniting the charge of powder.

The side openings formed by the slots 8 and 9 of the sections are covered with a thin coating or covering 19 of paper or other suitable material to retain the powder in the casing, and the said covering 19 is also extended over the lower end of the casing 5 for retaining the packing in place. The thin paper readily burns and does not interfere with the exploding of the dynamite when the charge of powder within the casing is ignited. When the battery circuit containing the wires 12 and 13 is closed, the resistance 16 connecting the bared terminals of the wires is caused to glow and will positively ignite the charge of powder contained within the casing, and the ignition of the charge of powder and the exploding of the dynamite does not depend on a spark jumping from one terminal to another of the said wires.

The blasting cartridge is waterproof and the dynamite exploding device is securely retained in the hole in the dynamite, and the blasting cartridge may be handled with perfect safety, as there will be no liability of an explosion of the dynamite until the blasting cartridge is placed in position and the battery circuit closed.

What is claimed is:

1. A blasting cartridge including a charge of dynamite, a container therefor of stiff waterproof paper secured by an adhesive to the dynamite and having a top portion extending over the said charge of dynamite and secured to the same, and a dynamite exploding device embedded in the dynamite and retained therein by the said top of the container, said dynamite exploding device comprising a casing having a top wall and open at the lower end and provided with a charge of exploding powder, a packing arranged within the lower end of the casing and retaining the exploding powder therein, and electric wires passing through the top wall of the casing at spaced points and twisted at the inner and outer faces of the said top wall, and a resistance connecting the terminals of the said wires within the casing and adapted to ignite the said powder when a current is passed through the wires.

2. A dynamite exploding device for blasting cartridges comprising a casing adapted to contain an exploding charge and composed of telescoping upper and lower tubular sections, the upper section being provided with a top wall and said upper and lower sections being also provided with registering slots, electric wires passing through the top wall of the upper section at spaced points and having terminals arranged within the casing and provided with a connecting resistance for igniting the said charge when the current is passed through the wires.

3. A dynamite exploding device for blasting cartridges comprising a casing adapted to contain an exploding charge and composed of telescoping upper and lower tubular sections, the upper section being provided with a top wall and the lower section having its lower end open, said upper and lower sections being also provided with registering slots, electric wires passing through the top wall of the upper section at spaced points and having terminals arranged within the casing and provided with a connecting resistance for igniting the said charge when the current is passed through the wires, a packing filling the lower open end of the said lower section and retaining the charge therein, and a thin paper covering arranged over the said slots

and over the open end of the lower section.

4. A dynamite exploding device for blasting cartridges comprising a casing substantially elliptical in cross section and adapted to contain an exploding powder, said casing being composed of upper and lower telescoping sections having registering slots, the upper section being provided with an end wall, electric wires passing through the said end wall of the casing at spaced points and having terminals arranged within the said casing, and a resistance disposed transversely of the casing along the major axis of the elliptical formation thereof and connecting the said terminals.

In testimony whereof, I have hereunto set my hand, this 27th day of October, 1931.

STEPHEN TESE.