PCT WORLD INTELLECTUAL PROPERTY ORGANIZATION
International Bureau

INTERNATIONAL APPLICATION PUBLISHED UNDER THE PATENT COOPERATION TREATY (PCT)

(51) International Patent Classification 6 : A61B 17/58	A1	(11) International Publication Number: WO 95/03745
		(43) International Publication Date: 9 February 1995 (09.02.95)

(21) International Application Number: PCT/IB94/00178

(22) International Filing Date: 24 June 1994 (24.06.94)

(30) Priority Data:
08/101,601 3 August 1993 (03.08.93) US

(71) Applicant: HOWMEDICA INC. [US/US]; 235 East 42nd Street, New York, NY 10017 (US).

(72) Inventors: ASNIS, Stanley, E.; 38 Cornwall Lane, Port Washington, NY 11050 (US). CROMBIE, John, S.; 212 First Avenue, Newark, NJ 07107 (US).

(74) Agents: SPIEGEL, Allen, J. et al.; Pfizer Inc., 235 East 42nd Street, New York, NY 10017 (US).

(81) Designated States: AU, CA, DE (Utility model), JP, KR, European patent (AT, BE, CH, DE, DK, ES, FR, GB, GR, IE, IT, LU, MC, NL, PT, SE).

Published
With international search report.

(54) Title: RATCHETING COMPRESSION DEVICE

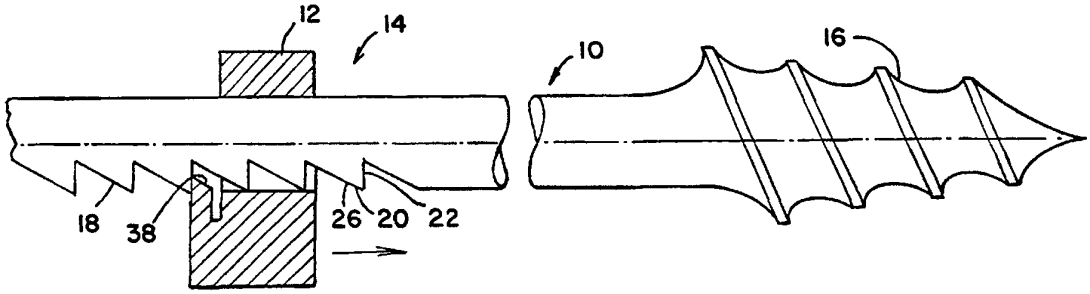

(57) Abstract

A ratcheting compression device (14) is provided which is very strong, which can be customized in length, which can be retightened periodically to maintain compression, which allows precise placement and alignment of bones with both grossly tuned compression and finely tuned compression, and in which only a limited inventory of parts is required. The two-piece compression device (14) comprises (a) a novel first piece (10) having a bone screw (16) located at a first end thereof and having a ratcheting means (18) located near the second end thereof and comprising teeth (20) having their crests (27) lying substantially in a plane and (b) a novel second piece (12) comprising an anti-rotation means which acts in cooperation with the ratcheting means (18) of the first piece (10) to compress two segments of bone together. In yet other embodiments, two embodiments of a driver are provided for quickly driving the stop onto the ratcheting means (18) to a desired extent. In a further embodiment, a customized method for compressing and fixing a first bone segment and a second bone segment together is provided.

FOR THE PURPOSES OF INFORMATION ONLY

Codes used to identify States party to the PCT on the front pages of pamphlets publishing international applications under the PCT.

AT	Austria	**GB**	United Kingdom	**MR**	Mauritania
AU	Australia	**GE**	Georgia	**MW**	Malawi
BB	Barbados	**GN**	Guinea	**NE**	Niger
BE	Belgium	**GR**	Greece	**NL**	Netherlands
BF	Burkina Faso	**HU**	Hungary	**NO**	Norway
BG	Bulgaria	**IE**	Ireland	**NZ**	New Zealand
BJ	Benin	**IT**	Italy	**PL**	Poland
BR	Brazil	**JP**	Japan	**PT**	Portugal
BY	Belarus	**KE**	Kenya	**RO**	Romania
CA	Canada	**KG**	Kyrgystan	**RU**	Russian Federation
CF	Central African Republic	**KP**	Democratic People's Republic of Korea	**SD**	Sudan
CG	Congo			**SE**	Sweden
CH	Switzerland	**KR**	Republic of Korea	**SI**	Slovenia
CI	Côte d'Ivoire	**KZ**	Kazakhstan	**SK**	Slovakia
CM	Cameroon	**LI**	Liechtenstein	**SN**	Senegal
CN	China	**LK**	Sri Lanka	**TD**	Chad
CS	Czechoslovakia	**LU**	Luxembourg	**TG**	Togo
CZ	Czech Republic	**LV**	Latvia	**TJ**	Tajikistan
DE	Germany	**MC**	Monaco	**TT**	Trinidad and Tobago
DK	Denmark	**MD**	Republic of Moldova	**UA**	Ukraine
ES	Spain	**MG**	Madagascar	**US**	United States of America
FI	Finland	**ML**	Mali	**UZ**	Uzbekistan
FR	France	**MN**	Mongolia	**VN**	Viet Nam
GA	Gabon				

RATCHETING COMPRESSION DEVICE

Field of the Invention

This invention relates to orthopedic implants and relates in particular to orthopedic compression devices for compressing and clamping bone.

Background of the Invention

In the prior art, a variety of devices for compressing bone have been known. See, for example, U.S. Patent 4,456,005, U.S. Patent 4,688,561, U.S. Patent 4,796,612 and U.S. Patent 5,217,462. In U.S. Patent 5,167,664 a ratcheting bone screw is disclosed.

It is an object of this invention to provide another compression device which is very strong, which can be customized in length, which can be retightened periodically to maintain compression, which allows precise placement and alignment of bones with both grossly tuned compression and finely tuned compression, and in which only a limited inventory of parts is required.

Summary of the Invention

These and other objects are satisfied by the ratcheting compression device of the invention.

According to the invention, a two-piece compression device comprises (a) a novel first piece having a bone screw located at a first end thereof and having a ratcheting means located near the second end thereof and comprising teeth having their crests lying substantially in a plane and (b) a novel second piece comprising an anti-rotation means which acts in cooperation with the ratcheting means of the first piece to compress two segments of bone together.

In a preferred embodiment, the novel anti-rotation means is a stop (e.g., nut or ball) with a keyed throughhole, the stop being specially formed to co-act with the ratcheting teeth so as to allow movement of the stop in only one direction and thereby to compress the segments of bone together and so as also to prevent rotation between the stop (or second piece) and the pin (or first piece).

In another preferred embodiment, the novel first piece according to the invention to be used with the special stop of the invention is a long cylindrical piece with a bone screw at one end and a ratchet component having ratchet teeth with their crests lying substantially in one plane (or a plurality of planes) at the other end.

In yet other embodiments, two embodiments of a driver of the invention are provided for quickly driving the stop onto the ratcheting means to a desired extent.

In a further embodiment, a customized method for compressing and fixing a first bone segment and a second bone segment together comprises:

(a) drilling the first end of the elongated piece of the device of the invention through the first bone segment and into the second bone segment (or inserting the elongated piece into a pre-drilled hole) and advancing the screw threading of the device of the invention as far as desired;

(b) ratcheting the second piece of the device of the invention down onto the ratchet component of the first piece of the device of the invention as far as desired so as to provide a gross compression adjustment to nearly the final compression adjustment; and

(c) turning the first piece or the second piece of the device of the invention (and thus also the second piece or the first piece, respectively, neither part being able to rotate with respect to the other piece) so as to provide fine compression adjustment.

Also according to the invention, step (b) is preferably done quickly with the ratcheting gun of the invention.

Also according to the invention, an optional additional step of cutting off the elongated piece to a desired extent is preferably done, either following or immediately preceding step (c), after gross compression adjustment has been done.

DESCRIPTION OF THE PREFERRED EMBODIMENTS

Brief Description of the Drawings

Figure 1 is a plan view of an embodiment of the first piece of the invention of the compression device of the invention, showing the ratcheting means at one end thereof and the bone screw at the other end thereof.

Figure 2 is an elevational view, partially in cross-section of the ratcheting means of Figure 1, as taken along the line 2-2 in Figure 1.

Figure 3 is a plan view of an embodiment of the second piece of the compression device of the invention, which acts in cooperation with the first piece of the device as shown in Figure 1, with an anti-rotation means (in the form of a keyed stop) which acts with the ratcheting means shown in Figure 1 so as to compress two segments of bone together, this keyed stop being (in one embodiment) a hex nut.

Figure 4 is a cross-sectional view of the hex nut shown in Figure 3 as taken along the line 4-4 in Figure 3.

Figures 5 and 6 are alternative embodiments of a keyed stop (e.g., hex-nut or ball) of the device of the invention.

Figure 7 is a plan view, partially in cross section of an embodiment of an assembled two-piece device of the invention, showing the embodiments of Figure 1 and of Figure 4 assembled together in combination.

Figures 8 and 9 show schematic illustrations of alternative embodiments of a driver of the invention for use in driving the keyed nut down onto the ratcheting means of the first piece of the device of the invention.

Figure 10 is an illustration of steps used to produce an embodiment of a keyed stop of the invention.

DETAILED DESCRIPTION OF THE DRAWINGS

Referring to the drawing, shown in Figure 1 is an embodiment of a first piece 10 of the invention to be used in combination with an embodiment of a second piece 12 of the invention (shown in Figures 3 through 6), so as to provide an embodiment of the compression device of the invention 14 (shown assembled together in Figure 7). First piece 10 is a pin having located at (or near) its distal end a bone thread 16 and having located near its mid-portion ratcheting means 18 and having preferably a substantially smooth portion 19 at or near its proximal end. Ratcheting means 18 comprises preferably asymmetric teeth 20 which are located preferably on only one surface of first piece 10 and are located at the proximal end thereof. Asymmetric teeth 20 are angled as shown in Figure 1 and in Figure 7, with one side 22 of each tooth being substantially perpendicular to the centerline 24 of first piece 10, and with the other side 26 of each tooth (when extended) forming an angle α 28 with centerline 24. Angle α 28 is an acute angle. The crests 27 of the teeth 20 lie in a single plane in this embodiment (or alternatively in another embodiment the teeth can lie with their crests in a plurality of planes).

In Figure 2, ratcheting means 18 is shown partially in cross-section, taken along the line 2-2 in Figure 1, with centerline 24 and angle α 28 shown. As clearly shown in Figures 1 and 2, first piece 10 can be formed from a pin (e.g., an Apex® pin sold by Howmedica) having a bone thread 16 at one end thereof and a smooth portion 19 at the other end thereof and by machining the mid-portion of the pin to provide a flat surface 30 on the pin and by machining opposite to that flat surface the asymmetric teeth 20 which were described above.

In Figure 3, an embodiment of second piece 12 is shown in the form of a hex nut which has been machined so that it has a keyed throughhole 29 with a flat surface 32 which corresponds substantially to the flat surface 30 on first piece 10 and with a curved portion 36 which corresponds substantially to the curved portion 34 on first piece 10. Second piece 12 as shown in Figure 3 also has a flexible interference lip 38 (which is preferably an integral part of second piece 12) for mating with the asymmetric teeth 20 (described below and shown assembled together in Figure 7).

In Figure 4, second piece 12 is shown in cross-section, with flexible interference lip 38, which interacts in combination with asymmetric teeth 20, as described below.

In Figure 5, second piece 12 is shown in cross-section. A keyed throughhole 29 is broached to produce a flat surface 32 and a curved portion 36 positioned at a distance a (40) and b (42), respectively, from the centerline 24.

The production is described further below with reference to Figure 10.

Integral portion 46 is preferably cut so that it has the shape of interference lip 38 which will coact with asymmetric teeth 20. (Thus, inference lip 38 will have preferably substantially the shape of an asymmetric tooth which can fit within the space between any two adjacent asymmetric teeth 20.)

In Figure 6, an alternative embodiment of second piece 12 is shown, in the form of a ball or cylinder, having a keyed throughhole 29, with a flat surface 32 and a curved portion 36. Additionally, flexible interference lip 38 is present. Also slot 50 is shown. Slot 50 is used for rotating the stop 12 (as a receptacle for the driver).

In Figure 7, first piece 10 of the invention and second piece 12 of the invention are shown assembled together so as to provide the ratcheting compression device 14 of the invention. Second piece 12 has been positioned quickly onto first piece 10 by a driver (described below with reference to Figure 8), second piece 12 being movable in only one direction (as shown by the arrows in Figure 7). Flexible interference lip 38 is shown in mating position within ratcheting means 18, which is preferably asymmetric teeth 20.

In Figures 8 and 9, schematic illustrations of alternative embodiments of a driver suitable for assembling second piece 12 onto first piece 10 are shown.

In Figure 8, a specially-designed ratcheting gun 50 for use in inserting the compression device 14 of the invention is shown in cross-section. The ratcheting gun 50 has a main body portion 52, which houses therewithin a first end 54 of trigger 56.

First end 54 is attached to main body portion 52 by a pivot pin 58 and is maintained in its position in a relaxed state by a torsion spring 60. The second end 62 of trigger 56 extends outside main body portion 52 and has indentations 64 for enabling trigger 56 to be easily grasped. Trigger 56 also has attached thereto at pivot 66 a prong 68 which is supported by spring 70 within main body portion 52. Prong 68 has a second end 72 which has a cooperating portion 74 which fits within each (one at a time) of the asymmetric teeth 20 of the compression device 14 of the invention when spring 70 is in its relaxed position.

In the operation of ratcheting gun 50 in Figure 8, trigger 56 is pulled back towards main body portion 52 and against the action of torsion spring 60, thereby causing cooperating portion 74 of second end 72 to be pulled against one of the asymmetric teeth 20 (as shown in Figure 8 towards the left). Second piece 12 which is positioned adjacent to interacting end 76 of ratcheting gun 50 is forced thereby to the right as depicted by the arrow in Figure 8) and the entire gun 50 moves so as to move second piece 12. Interacting end 76 (corresponding to a muzzle end) of ratcheting gun 50 is specially shaped so that it cooperates with second piece 12.

To assemble this embodiment of the device of the invention one can use the gun as a holder for the stop 12. Then one can manually insert first piece 10 through the stop (or second piece) 12. When ratcheting means 18 engages with second end 72 of prong 68, one then positions the stop 12 on the interacting end 76 of the gun 50 and then manually inserts first piece 10 through the stop (or second piece) 12 into the gun 50. When the first of the asymmetric teeth 20 engages with the second end 72 of prong 68, one can use the trigger 56 to continue the compression mechanically.

In Figure 9, an alternative embodiment of a ratcheting gun is shown in cross-section. Corresponding parts are numbered as in Figure 8. This embodiment of the gun has an independent ratcheting pusher rod 102 (independent of the ratchet teeth of the pin 10) and has a holder 100 (which can be a pin lock, for example). In this embodiment, the pusher rod 102 (having interacting end 76 as integral part thereof) moves so as to move second piece 12. The gun 50 provides the mechanical advantage to get the second piece 12 engaged with the first of the asymmetric teeth 20.

In Figure 10, the steps in the manufacture of second piece 12 are depicted schematically, in Figures 10a through 10e. In Figure 10a, a hex-shaped piece of metal

78 is shown. In Figure 10b, that same piece of metal 78 is shown after a slit 80 has been cut into the hex-shaped piece 78, but only partially therethrough. In Figure 10c, slit 80 is positioned such that it forms a first, smaller portion in the hex-shaped piece of metal 78 and a second, larger portion 84. As shown in Figure 10c, first smaller portion 82 is then drilled so as to produce a hole 86 having a diameter a 88; and second (larger) portion 84 is broached (or otherwise shaped) so as to produce a keyed throughhole 29 (which is D-shaped, for example).

Figure 10d is taken along the line X-X′ in Figure 10c with corresponding parts labeled correspondingly.

In Figure 10e, in the final step of the production of the ratcheting screw (or second piece 12), the major portion of first (smaller) portion 82 in hex-shaped piece of metal 78 is removed, leaving behind tab 94. If desired, tab 94 can be shaped so that it appears as in Figure 5 with a flat 46; or alternatively, if desired, it can be shaped so that it is angled as shown in Figure 4 at flexible interference lip 38.

The specially shaped stop of the invention is preferably machined from one piece of metal (which can be any material that is suitable for implants, for example stainless steel). The stop has an outer flange which can be in the shape of a hexagon or round or any other suitable shape, as desired. The stop preferably has a keyed throughhole with a flexible interference lip.

The pin of the invention has at or near its distal end any suitable bone thread. It has asymmetric teeth which are preferably located on one surface near the mid-portion of the pin. Alternatively, teeth can be provided on more than one flat surface, as desired, for example on two or three or more surfaces. The pin also preferably has a smooth portion at the proximal end thereof, although it is not absolutely required.

The two-piece implant of the invention provides precise placement and alignment of bones (using the shaft or pin portion), and the specially designed stop (or nut) portion of the device provides (together with the first portion or pin portion or shaft portion) compression and fixation of bones. The shaft or pin portion is cut off to provide a customized device length or left on to provide a custom length screw with a long driving shaft.

The two piece device of the invention is inserted in the following manner. The pin is first driven into and through a first bone segment and then into a second bone segment in the same manner as a threaded pin is driven into bone. Next, the stop of

the invention is ratcheted down onto the ratchet component, preferably with the ratchet gun of the invention, as far as desired and nearly to the position of the final compression adjustment, thus providing a gross compression adjustment. The teeth of the ratchet are angled such that the stop can be driven down only in one direction. The shape of the throughhole in the nut and the shape of the pin (i.e., the shape of the first piece 10 and second piece 12) mate in such a way that the nut cannot rotate on the pin. If the first compression described above has resulted in the screw tip advancing more than desired, the combination of the screw and bone pin can be backed out by turning the combination of the two part device as a screw; and, if desired, the screw can then be further shortened with the ratchet. Alternatively, if desired, the combined device can be advanced further, by turning the combined device as a screw and performing the final compression as a lag screw. After the compression has been completed, the end of the device opposite the threading can, if desired, be left so that it protrudes out of the skin or alternatively, it can be cut off, if desired, so as to provide a customized device length.

The two-piece device of the invention has significant advantages over other known devices. Due to the capabilities of length customization described above, only a limited inventory of parts is required. The device is very versatile, and with only a few types of threaded pins and with a few different shapes of nuts, many combinations can be made. One can customize the screw length by cutting off the ratcheting portion, as desired. One can achieve gross compression very rapidly by use of the ratchet and one can then follow that compression by a very fine adjustment of compression by use of the device as a lag screw and by rotating the two-part device. The bone thread also can be initially placed into the bone very quickly with a drill to almost its final length, and the compression can be achieved very quickly with the ratchet. The final compression with the lag screw can be made, and if the screw tip has advanced too much, the device can be backed out and can be shortened in length with the ratchet so as to provide additional compression. The device provides options of either having the end opposite the bone thread be left protruding out of the skin or cut off; if it is left protruding out of the skin, the compression can be adjusted (either increased or decreased) or the entire device can later be removed without further surgery. This option provides both an external and internal fixation device. The device provides a very strong compression device, and even devices of very small sizes will be very

strong due to the design of the device, which features a solid core of metal through the entire pin. The pin portion can be used through jigs to aim the device under fluoroscopy; this is not possible with a classical screw where the screw head interferes with the jig.

Further advantages of the compression device 14 of the invention are that the device can be driven by turning either first piece 10 or second piece 12, and it is not necessary to remove the shaft (or first piece 10) to perform this compression.

The pin can be self-drilling and can be used with any combination of jigs.

In performing surgery, the surgeon is not always sure what length of the pin is needed to produce the desired compression. However, with the device of this invention, the length can be adjusted (as described herein).

Because the tab is made of metal, the device of the invention is very strong and rigid and the ratcheting gun 50 as described herein is generally needed to insert the second piece 12. Because of the asymmetric teeth 20 of the first piece 10, the second piece 12 can be moved only in one direction and cannot be removed from the first piece 10, thus providing a compression device 14. The device of the invention 14 can be removed as a one piece device (as a normal screw would be removed) by rotating the stop 10.

CLAIMS

1. An implant for compressing a first bone segment and a second bone segment together, said implant comprising:

(a) a first elongated piece having a first end and a second end and comprising:

(1) a screw threading located at least substantially adjacent to said first end and

(2) a ratchet component comprising teeth which are positioned near said second end and having their crests lying substantially in a plane; and

(b) a second piece comprising an antirotation means for use in cooperation with said first elongated piece, wherein said second piece is to be ratcheted down from said second end so as to compress said first bone segment and said second bone segment together and wherein said second piece has a lock component which locks with teeth of said ratchet component in a manner such that said second piece can be moved only in one direction with respect to said first piece and such that said second piece is locked rotationally with respect to said first elongated piece.

2. An implant according to claim 1, wherein said first elongated piece has a solid inner core, a centerline l and a flat surface, wherein teeth of said ratchet component are positioned substantially opposite to said flat surface, and wherein said first elongated piece has a smooth portion at its second end.

3. An implant according to claim 2, wherein said first elongated piece is in the shape of a substantially cylindrical rod, and wherein teeth of said ratchet component are angled at an acute angle with respect to said centerline l.

4. An implant according to claim 3, wherein said second piece is a stop having a keyed center aperture which is substantially similar to and slightly larger in cross section than the cross section of said substantially cylindrical rod.

5. An implant according to claim 4 wherein said keyed center aperture has a flexible interference lip which comprises said lock component and which locks with teeth of said ratchet component.

6. An implant for compressing a first bone segment and a second bone segment together, said implant comprising:

(a) a first elongated piece having a first end and a second end to be used in cooperation with an antirotation means and comprising:

(1) a screw threading located at least substantially adjacent to said first end and

(2) a ratchet component comprising teeth which are positioned at least substantially adjacent to said second end and having their crests lying substantially in a plane.

7. An implant according to claim 6, wherein said first elongated piece has a solid inner core, a centerline l and a flat surface, wherein teeth of said ratchet component are positioned substantially opposite to said flat surface, and wherein said first elongated piece has a smooth portion at its second end.

8. An implant for compressing a first bone segment and a second bone segment together, said implant comprising:

an antirotation means for use in cooperation with an elongated piece, wherein said antirotation means is to be ratcheted down along a ratchet component on said elongated piece so as to compress said first bone segment and said second bone segment together and wherein said antirotation means has a lock component comprising a flexible interference lip which locks with teeth of said ratchet component in a manner such that said antirotation means can be moved only in one direction with respect to said elongated piece and such that said antirotation means is locked rotationally with respect to said elongated piece.

9. An implant according to claim 8, wherein said first elongated piece has a solid inner core, a centerline l and a flat surface, and wherein teeth of said ratchet component are positioned substantially opposite to said flat surface.

10. A ratcheting gun for linear translation with respect to each other of a first part having asymmetric teeth and a second part having a mating shape, comprising in operable communication:

(a) a main body portion;

(b) a spring-loaded trigger having

(1) a first end attached by a pivot to said main body portion; and

(2) a second end extending outside said main body portion; and

(c) a spring-loaded prong attached to said spring-loaded trigger which operates in cooperation with said asymmetric teeth of said first part of said device so as to permit said second part of said device to move only in a single direction with respect to said asymmetric teeth of said first part of said device.

11. A ratcheting gun according to claim 10, wherein said main body portion has a muzzle end having

(1) a shape which mates and cooperates with said second part of said device and

(2) having an aperture in which said first part having asymmetric teeth of said device can be positioned and held and wherein said second part can be advanced with respect to said teeth of said first part by said muzzle end.

12. A ratcheting gun according to claim 10, wherein said main body portion has as aperture in which said first part having asymmetric teeth of said device can be fixed and including also a ratcheting pusher rod having pusher rod teeth which are independent of said asymmetric teeth of said first part.

13. A ratcheting gun for inserting an implant of claim 1, comprising in operable communication:

(a) a main body portion;

(b) a spring-loaded trigger having

(1) a first end attached by a pivot to said main body portion; and

(2) a second end extending outside said main body portion; and

(c) a spring-loaded prong attached to said spring-loaded trigger which operates in cooperation with said asymmetric teeth of said ratchet component of the device of claim 1 so as to permit said asymmetric teeth to move only in a single direction and so as to push said second piece of the device of claim 1 towards said screw threading of said first elongated piece of the device of claim 1, so as to compress said first bone segment and said second bone segment together.

14. A method for compressing and fixing a first segment of bone and a second segment of bone together, said method comprising:

(a) drilling said first end of said elongated piece of the device of claim 1 into said first bone segment and into said second bone segment and advancing said screw threading of the device of claim 1 as far as desired;

(b) ratcheting said second piece of the device of claim 1 down onto said ratchet component of said first piece of the device of claim 1 as far as desired so as to provide a gross compression adjustment to almost final compression adjustment; and

(c) turning a piece selected from the group consisting of said first piece of the device of claim 1 and said second piece of the device of claim 1 so as to provide fine compression adjustment.

15. A method according to claim 14 and including also the step of:

(d) cutting off said elongated piece so as to provide a customized length after gross compression adjustment has been done as in step (c).

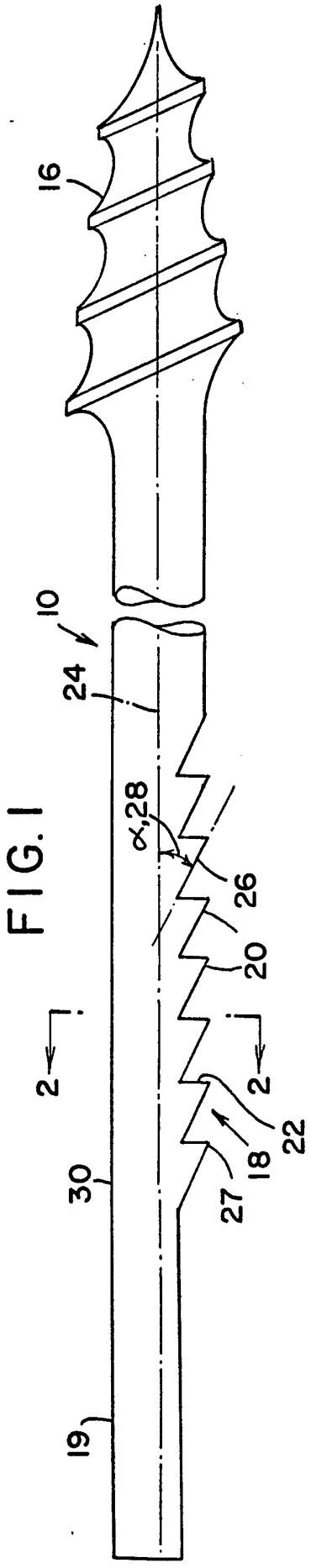

FIG. 1

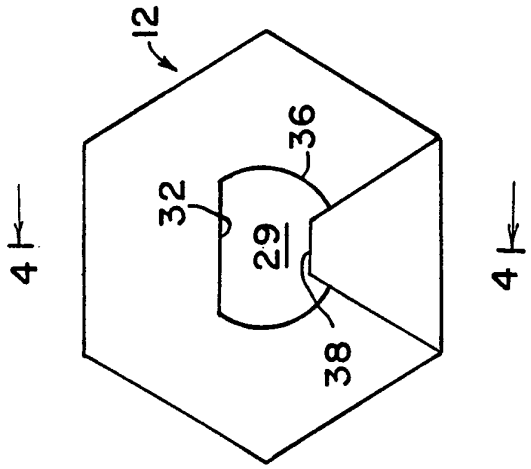

FIG. 3

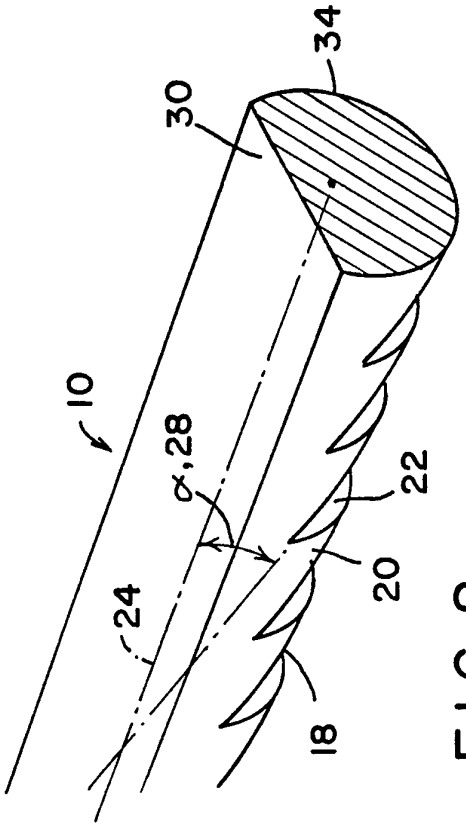

FIG. 2

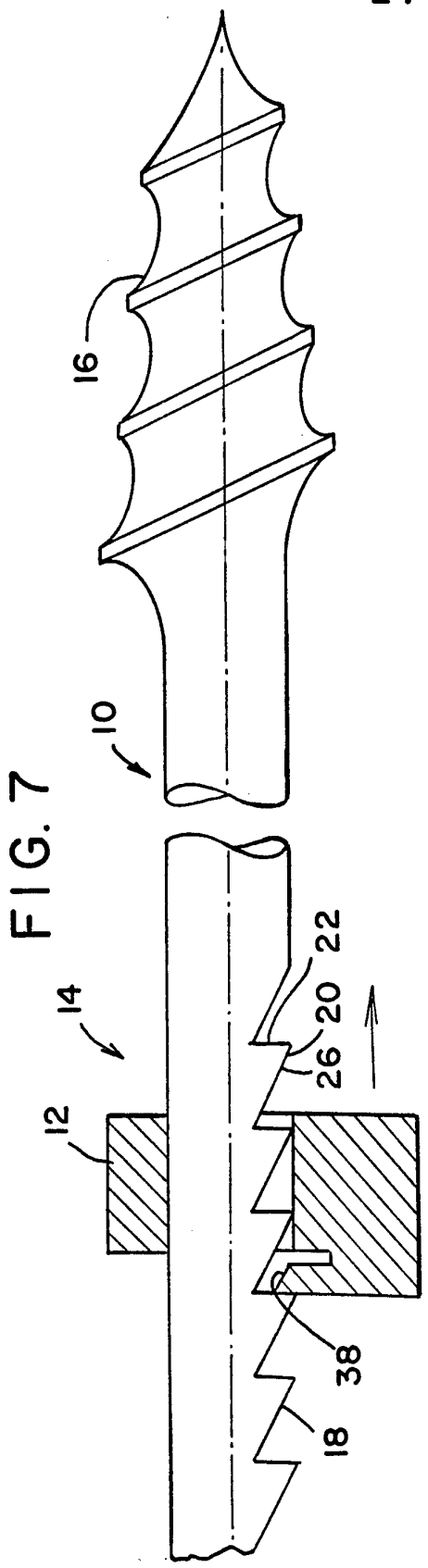

FIG. 7

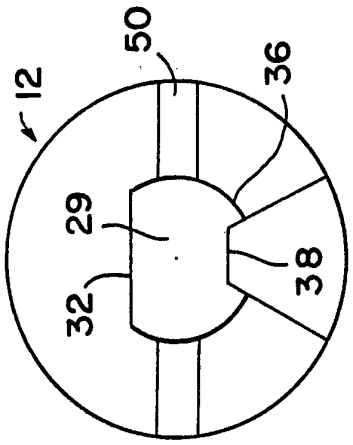

FIG. 6

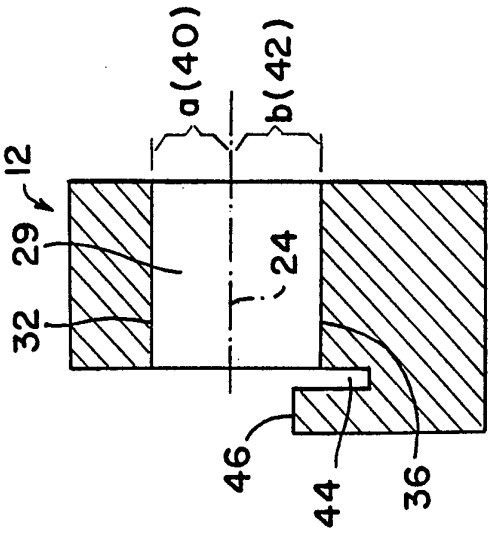

FIG. 5

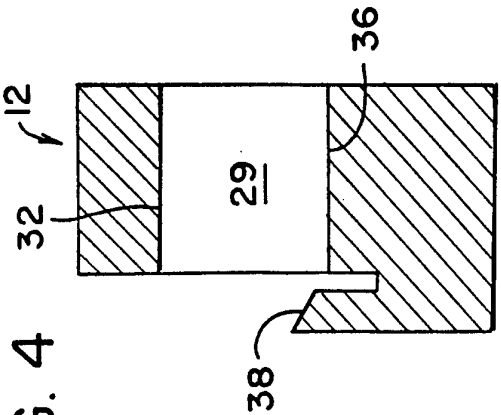

FIG. 4

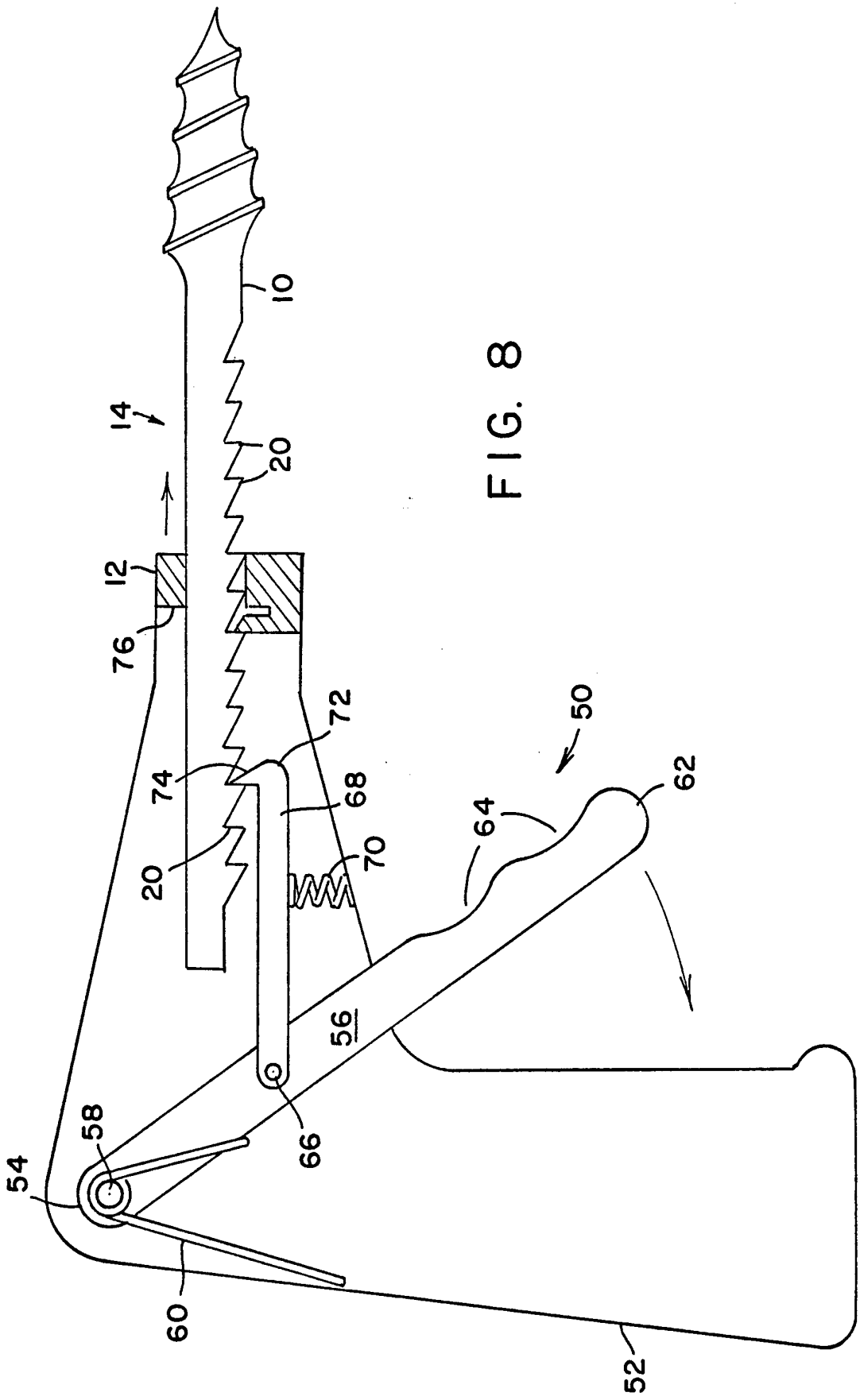

FIG. 8

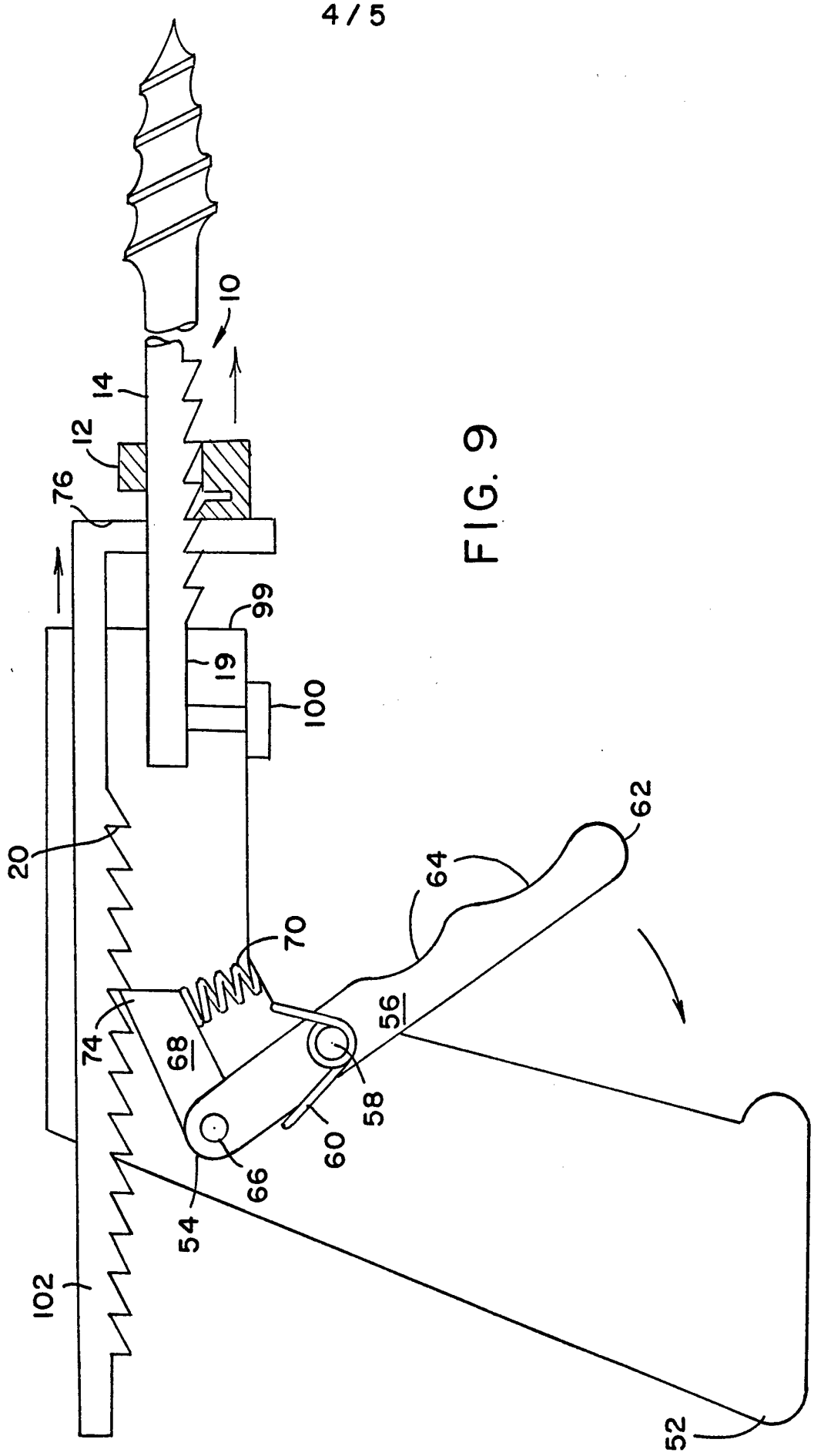

FIG. 9

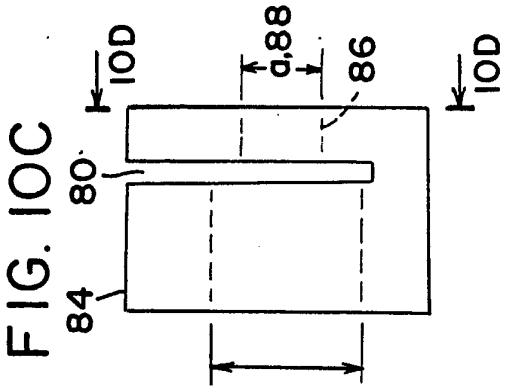

FIG. 10C

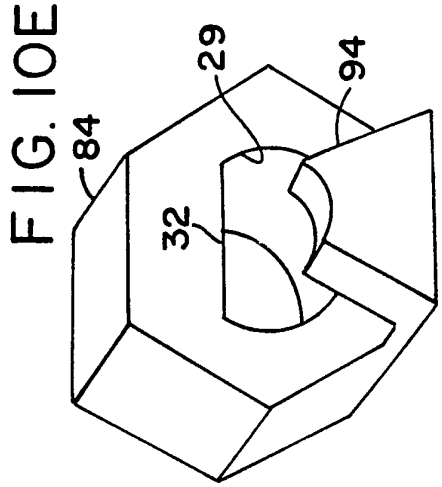

FIG. 10E

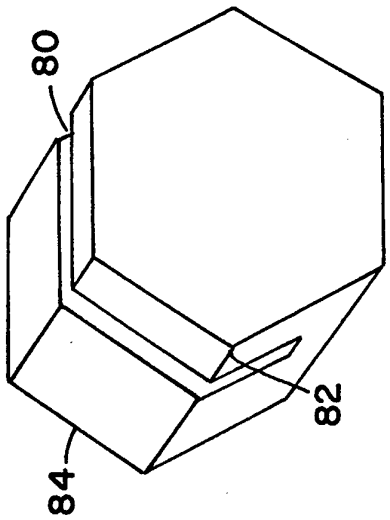

FIG. 10B

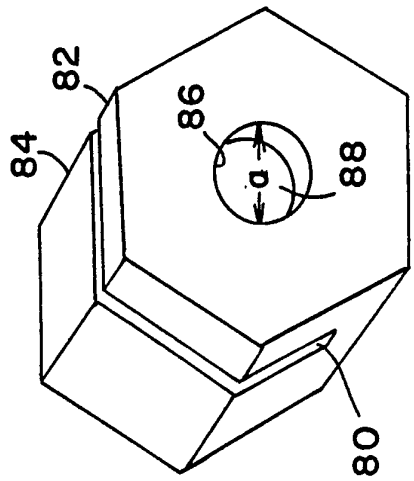

FIG. 10D

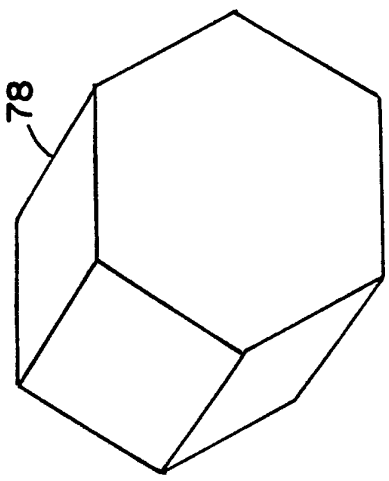

FIG. 10A

INTERNATIONAL SEARCH REPORT

Internati Application No
PCT/IB 94/00178

A. CLASSIFICATION OF SUBJECT MATTER

A 61 B 17/58

According to International Patent Classification (IPC) or to both national classification and IPC 6

B. FIELDS SEARCHED

Minimum documentation searched (classification system followed by classification symbols)

A 61 B

Documentation searched other than minimum documentation to the extent that such documents are included in the fields searched

Electronic data base consulted during the international search (name of data base and, where practical, search terms used)

C. DOCUMENTS CONSIDERED TO BE RELEVANT

Category *	Citation of document, with indication, where appropriate, of the relevant passages	Relevant to claim No.
A	US, A, 5 167 664 (R.A. HODOREK) 01 December 1992 (01.12.92), abstract; fig. 1,2; column 2, lines 12-48 (cited in the application). --	1,6,8, 14
A	CH, A, 475 754 (P. KLEUSER) 15 September 1969 (15.09.69), the whole document, especially column 2, lines 34-39. --	1,6,8
A	US, A, 5 217 462 (S.E. ASNIS et al.) 08 June 1993 (08.06.93), fig. 1-3,11-13; column 3, line 45 - column 4, line	1,6,14

[X] Further documents are listed in the continuation of box C.

[ ] Patent family members are listed in annex.

* Special categories of cited documents :

"A" document defining the general state of the art which is not considered to be of particular relevance

"E" earlier document but published on or after the international filing date

"L" document which may throw doubts on priority claim(s) or which is cited to establish the publication date of another citation or other special reason (as specified)

"O" document referring to an oral disclosure, use, exhibition or other means

"P" document published prior to the international filing date but later than the priority date claimed

"T" later document published after the international filing date or priority date and not in conflict with the application but cited to understand the principle or theory underlying the invention

"X" document of particular relevance; the claimed invention cannot be considered novel or cannot be considered to involve an inventive step when the document is taken alone

"Y" document of particular relevance; the claimed invention cannot be considered to involve an inventive step when the document is combined with one or more other such documents, such combination being obvious to a person skilled in the art.

"&" document member of the same patent family

Date of the actual completion of the international search	Date of mailing of the international search report
28 September 1994	14. 10. 94

Name and mailing address of the ISA	Authorized officer
European Patent Office, P.B. 5818 Patentlaan 2 NL - 2280 HV Rijswijk Tel. (+ 31-70) 340-2040, Tx. 31 651 epo nl, Fax (+ 31-70) 340-3016	LUDWIG e.h.

Form PCT ISA/210 (second sheet) (July 1992)

C.(Conunuation) DOCUMENTS CONSIDERED TO BE RELEVANT

Category *	Citation of document, with indication, where appropriate, of the relevant passages	Relevant to claim No.
	49; column 5, lines 33-54 (cited in the application) --	
A	US, A, 4 903 692 (H.W. REESE) 27 February 1990 (27.02.90), the whole document. --	1,6,14
A	US, A, 4 796 612 (H.W. REESE) 10 January 1989 (10.01.89), the whole document (cited in the application). --	1,6,14
A	US, A, 4 119 091 (A.J. PARTRIDGE) 10 October 1978 (10.10.78), abstract; fig. 2,3; column 1, lines 53-66. ----	8

INTERNATIONAL SEARCH REPORT

Internatic application No.
PCT/IB 94/00178

Box I Observations where certain claims were found unsearchable (Continuation of item 1 of first sheet)

This international search report has not been established in respect of certain claims under Article 17(2)(a) for the following reasons:

1. [X] Claims Nos.: 14,15
because they relate to subject matter not required to be searched by this Authority, namely:
Remark: Although Rule 39(iv)PCT under Article 17(2)(a)(i) has to be applied to claims 14,15, the search was also carried out for these claims.

2. [ ] Claims Nos.:
because they relate to parts of the international application that do not comply with the prescribed requirements to such an extent that no meaningful international search can be carried out, specifically:

3. [ ] Claims Nos.:
because they are dependent claims and are not drafted in accordance with the second and third sentences of Rule 6.4(a).

Box II Observations where unity of invention is lacking (Continuation of item 2 of first sheet)

This International Searching Authority found multiple inventions in this international application, as follows:

1. [ ] As all required additional search fees were timely paid by the applicant, this international search report covers all searchable claims.

2. [ ] As all searchable claims could be searches without effort justifying an additional fee, this Authority did not invite payment of any additional fee.

3. [ ] As only some of the required additional search fees were timely paid by the applicant, this international search report covers only those claims for which fees were paid, specifically claims Nos.:

4. [ ] No required additional search fees were timely paid by the applicant. Consequently, this international search report is restricted to the invention first mentioned in the claims; it is covered by claims Nos.:

Remark on Protest

[ ] The additional search fees were accompanied by the applicant's protest.

[ ] No protest accompanied the payment of additional search fees.

ANHANG

zum internationalen Recherchenbericht über die internationale Patentanmeldung Nr.

ANNEX

to the International Search Report to the International Patent Application No.

ANNEXE

au rapport de recherche international relatif á la demande de brevet international n°

PCT/IB 94/00178 SAE 91698

In diesem Anhang sind die Mitglieder der Patentfamilien der im obengenannten internationalen Recherchenbericht angeführten Patentdokumente angegeben. Diese Angaben dienen nur zur Unterrichtung und erfolgen ohne Gewähr.

This Annex lists the patent family members relating to the patent documents cited in the above-mentioned international search report. The Office is in no way liable for these particulars which are given merely for the purpose of information.

La présente annexe indique les membres de la famille de brevets relatifs aux documents de brevets cités dans le rapport de recherche international visée ci-dessus. Les reseignements fournis sont donnés á titre indicatif et n'engagent pas la responsibilité de l'Office.

Im Recherchenbericht angeführtes Patentdokument Patent document cited in search report Document de brevet cité dans le rapport de recherche	Datum der Veröffentlichung Publication date Date de publication	Mitglied(er) der Patentfamilie Patent family member(s) Membre(s) de la famille de brevets	Datum der Veröffentlichung Publication date Date de publication
US A 5167664	01-12-92	keine - none - rien	
CH A 475754	31-07-69	keine - none - rien	
US A 5217462	08-06-93	AU A1 15824/92	06-10-92
		AU B2 648723	28-04-94
		CA AA 2104680	06-09-92
		DE U1 9290023	05-01-94
		EP A1 574517	22-12-93
		EP A2 611018	17-08-94
		JP T2 6500039	06-01-94
		WO A1 9215257	17-09-92
US A 4903692	27-02-90	keine - none - rien	
US A 4796612	10-01-89	keine - none - rien	
US A 4119091	10-10-78	CH A 618866	29-08-80
		DE A1 2730571	12-01-78
		DE C2 2730571	29-10-87
		FR A1 2357229	03-02-78
		FR B1 2357229	10-11-83
		GB A 1552677	19-09-79
		IE B 45156	30-06-82
		JP A2 53005889	19-01-78
		JP B4 61000104	06-01-86
		SE A 7707866	07-01-78