US 20010001445A1

(19) **United States**

(12) **Patent Application Publication** (10) **Pub. No.: US 2001/0001445 A1**

GALLIEN (43) **Pub. Date: May 24, 2001**

(54) **INTERLOCKING CORNER PROTECTORS FOR STACKABLE ENCLOSURES**

(76) Inventor: **ROBERT ALAN GALLIEN**, LOS GATOS, CA (US)

Correspondence Address:
MICHAEL L HARRISON
4320 STEVENS CREEK BOULEVARD
SUITE 150
SAN JOSE, CA 95129

(*) Notice: This is a publication of a continued prosecution application (CPA) filed under 37 CFR 1.53(d).

(21) Appl. No.: **09/348,435**

(22) Filed: **Jul. 7, 1999**

Publication Classification

(51) **Int. Cl.**[7] **B65D 85/48**

(52) **U.S. Cl.** **206/453**; 206/314

(57) **ABSTRACT**

An improved system and design of interlocking corner protectors for use with stackable enclosures employs a unique interlocking structure whose geometry allows the protectors to serve as interlocking elements when mated with an identical or compatible protector, and to serve as a foot or spacer when the enclosure is placed on a plane surface. The system and the unique structure allows for efficient production and stockage. A first type of protector, which can be fabricated from a first tool, is useable on any corner of a 90 degree cornered enclosure. A second type of protector, which can be fabricated from a second tool, is useable on any corner which combines 90 degree and 135 degree angles, corner and is compatible with and interlocks with the first type of protector. When applied to suitably dimensioned enclosures, the protectors allow the enclosures to stack and to interlock compatibly with one another, whether the enclosures have 90 degree or 135 degree corners. Thus, merely two types of protectors need be fabricated and stocked, thereby reducing tooling costs and parts stocks.

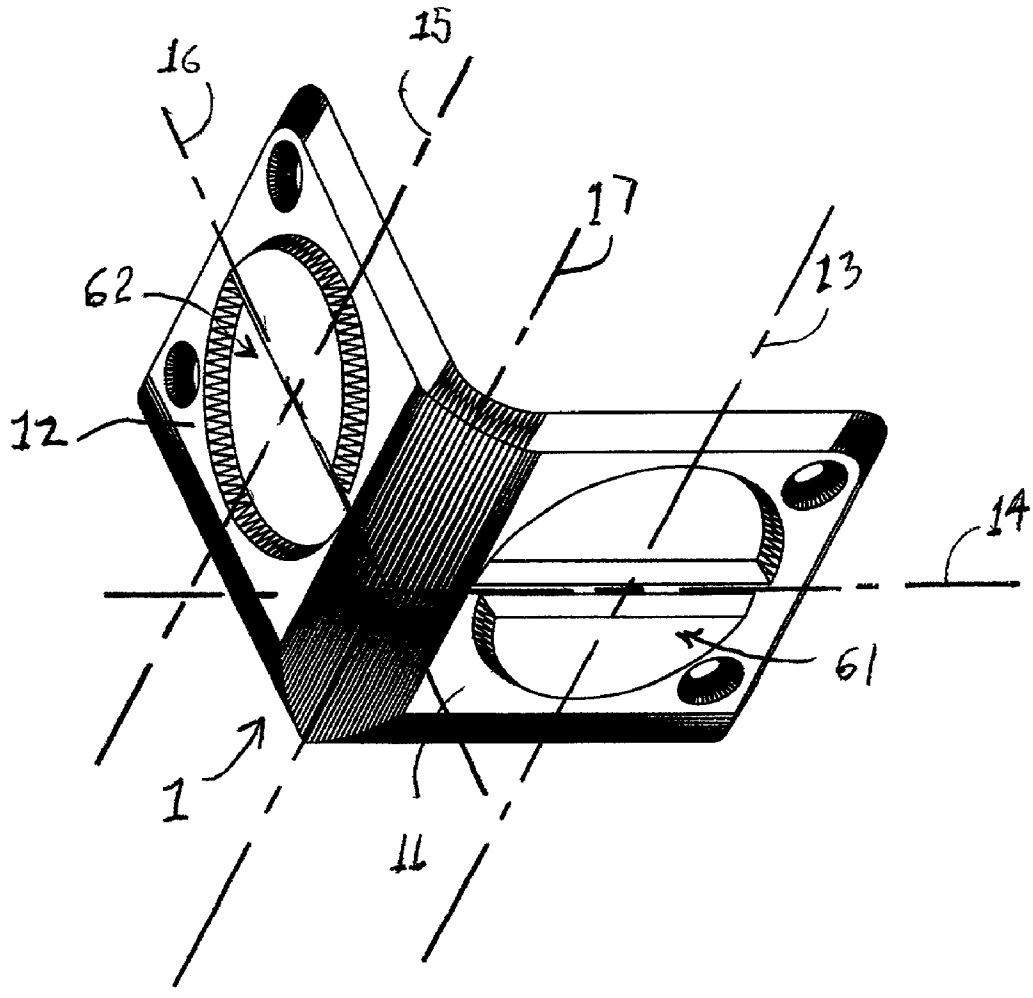

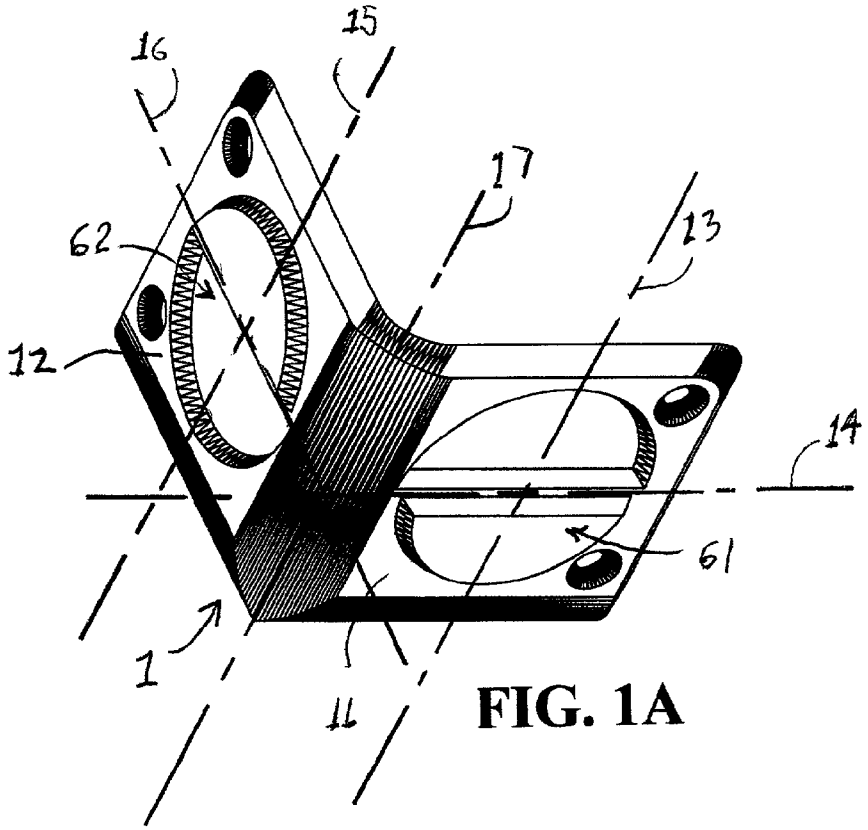

FIG. 1A

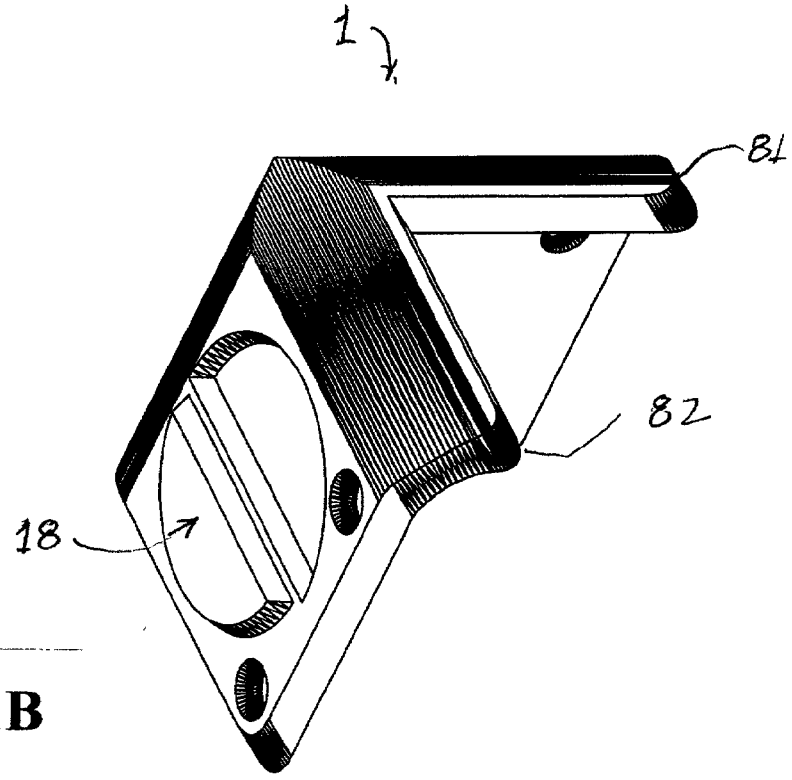

FIG. 1B

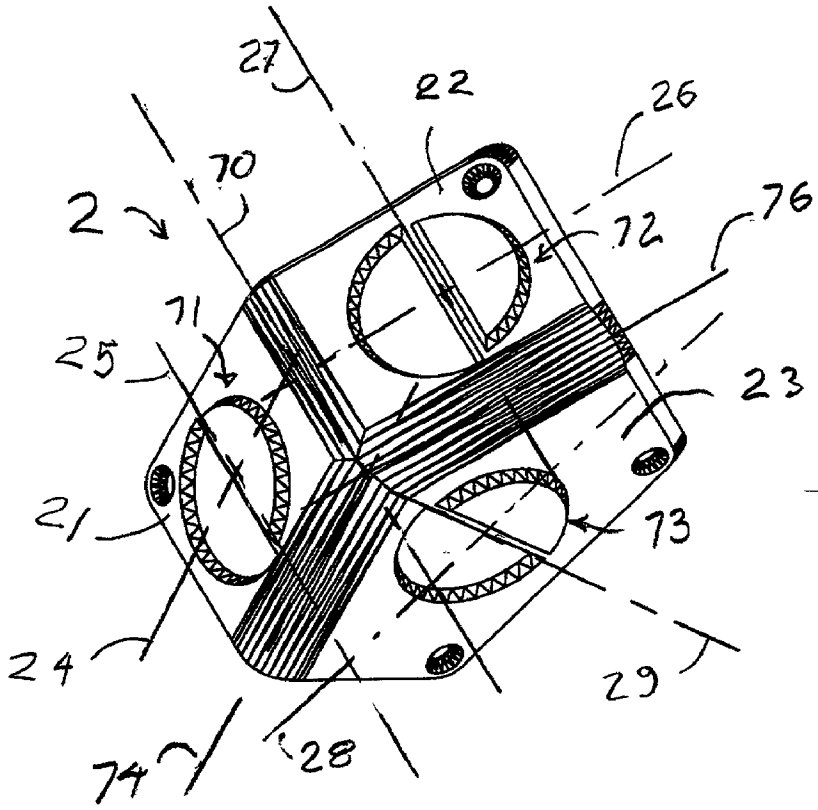

FIG. 2A

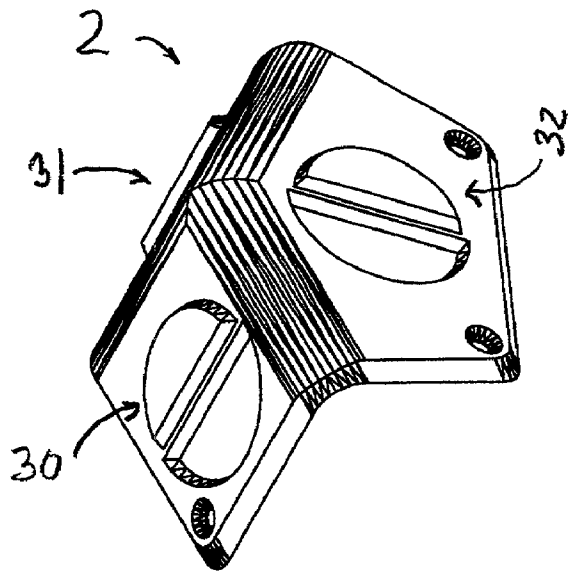

FIG. 2B

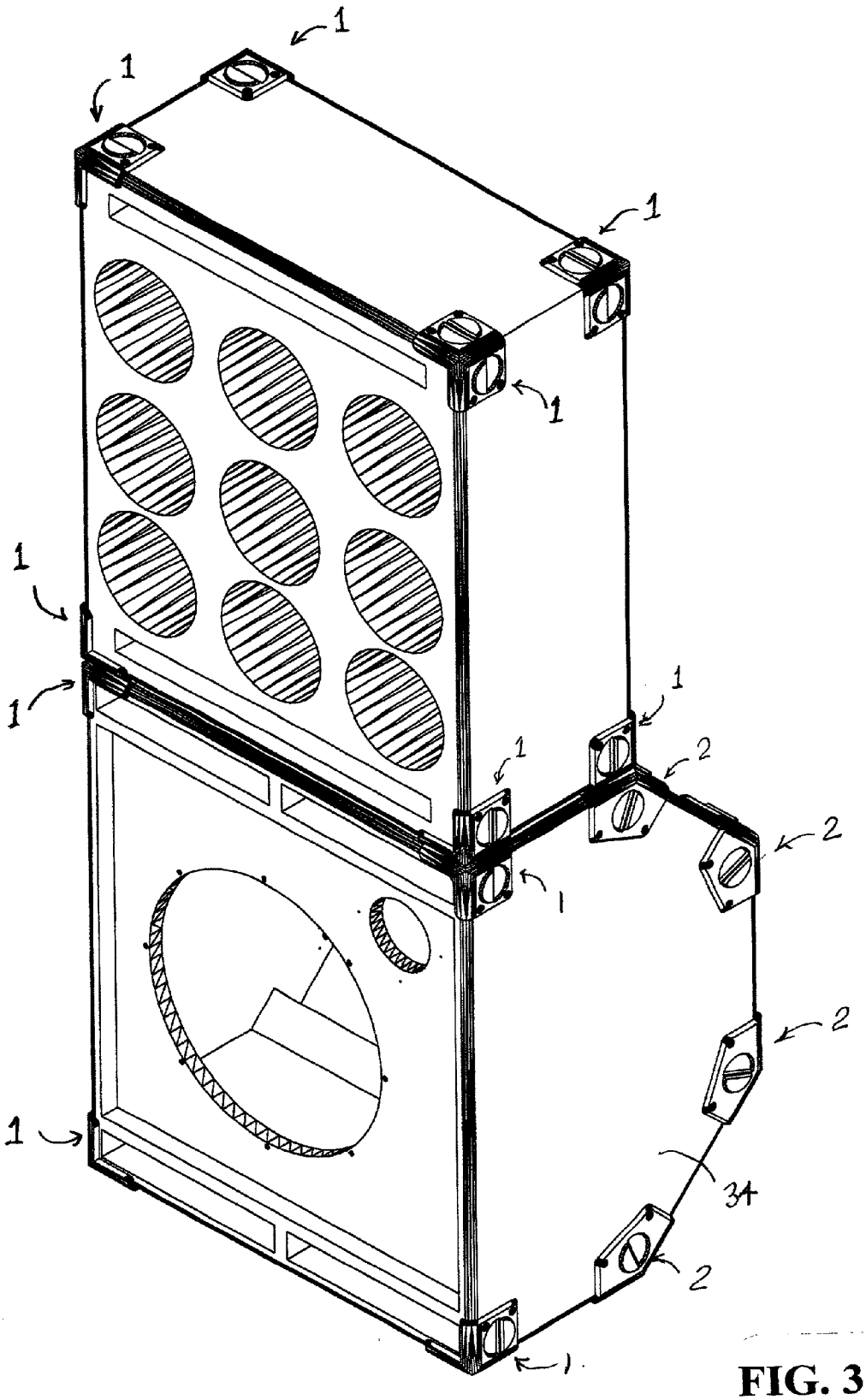

FIG. 3

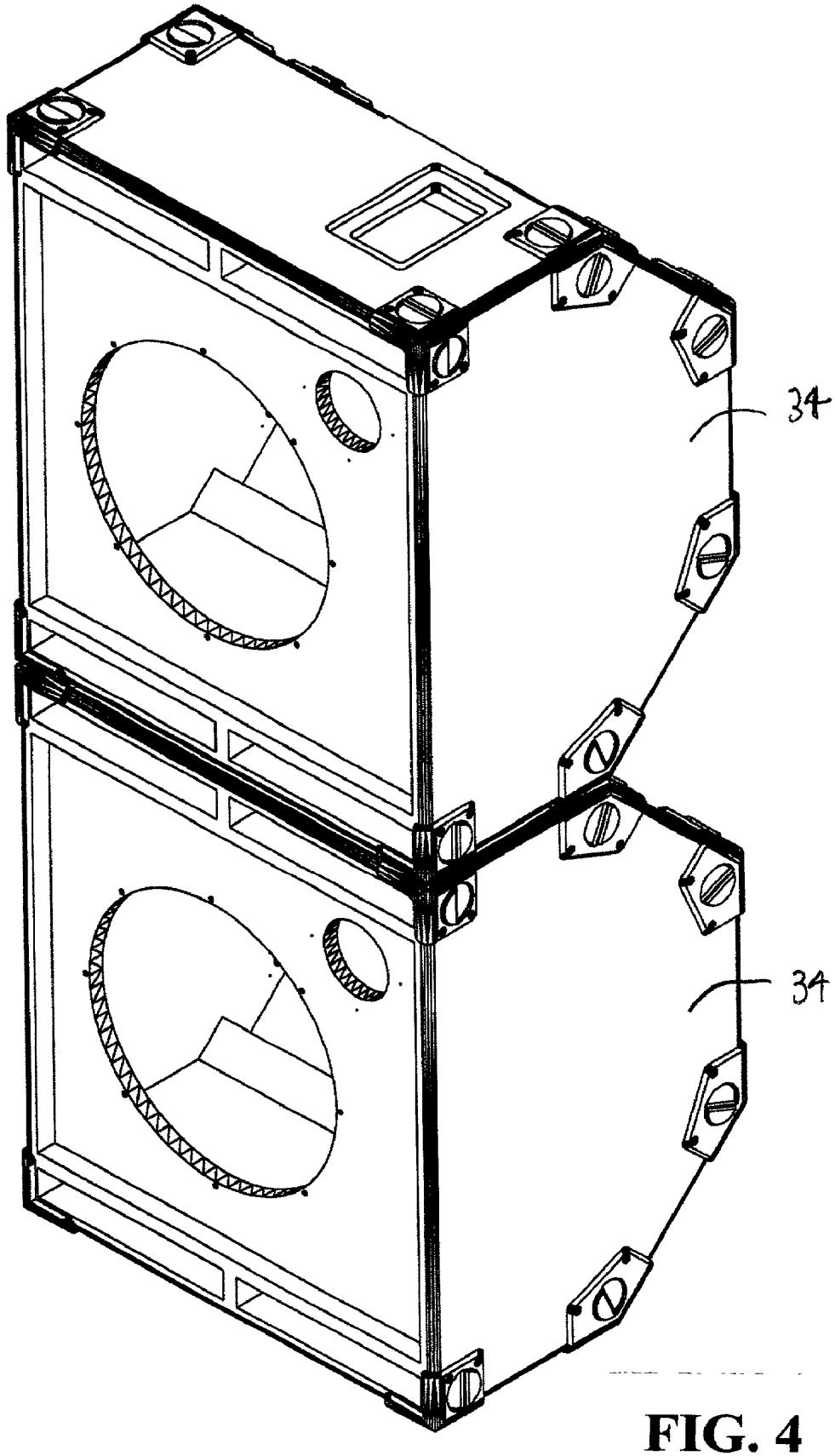

FIG. 4

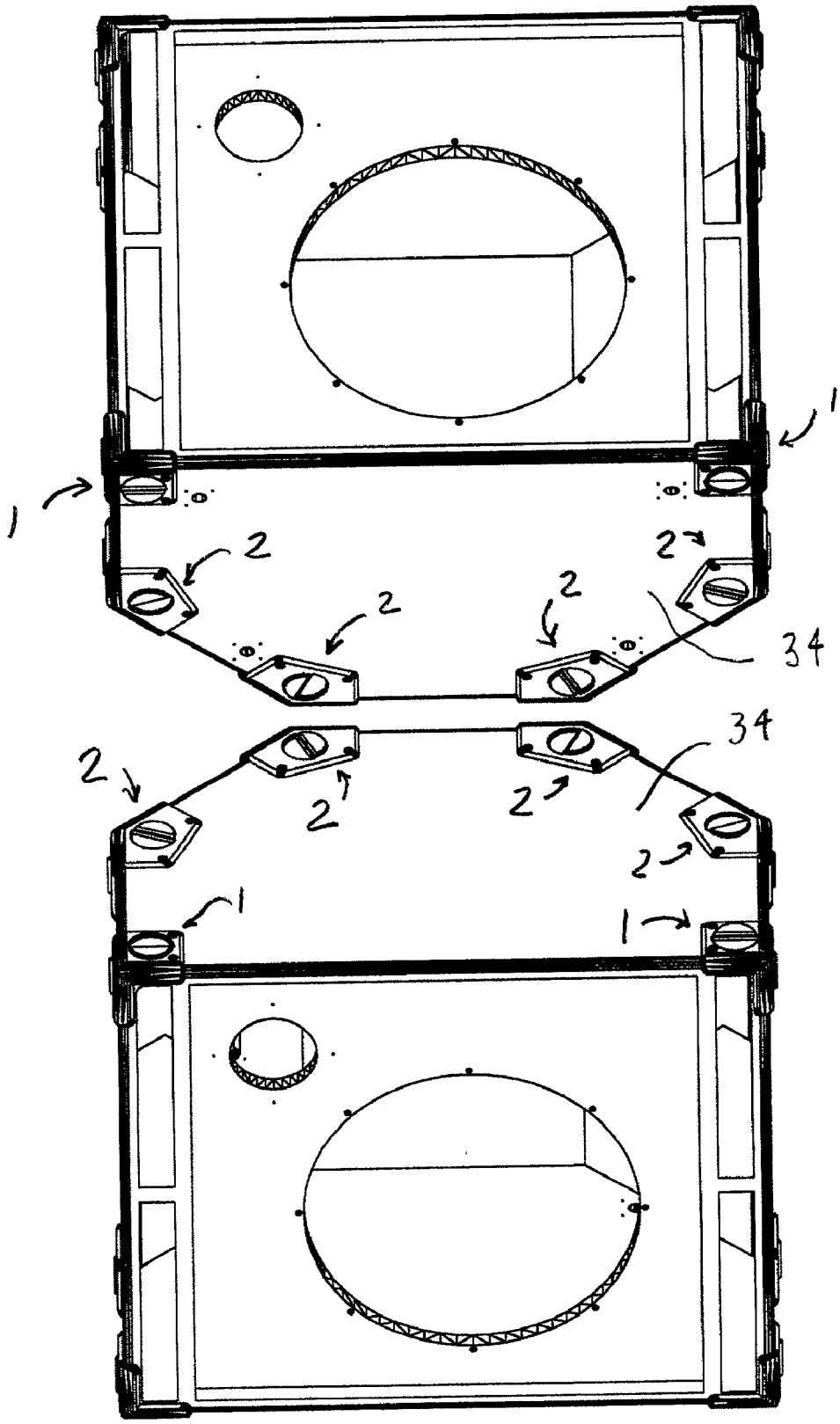

FIG. 5

INTERLOCKING CORNER PROTECTORS FOR STACKABLE ENCLOSURES

BACKGROUND OF THE INVENTION

[0001] 1. Field of the Invention

[0002] The present invention relates to corner protectors for containers, cases, enclosures, and the like, and in particular to corner protectors having unique structure that enables stacking and interlocking of enclosures which are fitted with such protectors with those of another enclosure or enclosure fitted with the same or a compatible protector.

[0003] 2. Prior Art

[0004] The use of corner protectors is well known. It has long been the response to the problem that is posed by the very geometry of rectangular solids: the corners are the most exposed, and, as a consequence, the most vulnerable to damage. It is well known to use a layer of a durable conforming material to prevent damage to the enclosure itself, and to prevent injury to persons accidentally coming into contact with exposed, sharp corners.

[0005] In addition, it has long been recognized that the corner protection device could be fabricated of such durable material, having sufficient mechanical strength to add its own strength to that of the enclosure itself, that it would provide a reinforcement function, strengthening the structure of the enclosure in the region adjacent to the corner to which the device is applied.

[0006] For the most part, corner protectors have been applied to enclosures having only 90 degree relationships between adjacent sides. That is of course the simplest form of a box, the well known rectangular solid enclosure available in virtually any dimensions, having six sides and eight corners. This is the most common shape because it is the simplest, most easily constructed, and most universally useful of all box shapes.

[0007] In recent years, a specialized enclosure having eight sides, two of which are oriented at 45 degrees to two adjacent sides, has become increasingly popular, often being used as a loudspeaker enclosure. An example of such an enclosure is shown in FIG.'S **3**, **4** and **5**. These enclosures are popular in certain fields such as music performance, public address systems, and the like, because they have more desirable acoustic properties when used as loudspeaker enclosures than do conventional rectangular boxes. They are somewhat stronger mechanically as well. In addition, their most appealing feature for many users is that when such enclosures are used as loudspeaker enclosures, and constructed with back panels that are at 45 degrees, they are inherently capable of being usefully placed in two additional stable positions, as an inherent feature of the shape. Thus, in addition to the six theoretical stable positions of a rectangular solid, the 45 degree-backed enclosure of FIG.'S **3**, **4** and **5**, when rested on either one of the 45 degree back panels, is capable of eight stable positions, some of which may not however be useful.

[0008] When loudspeaker drivers are installed on the front of the enclosure, as shown in FIG.'S **3**, **4**, and **5**, and the enclosure is rested on one of the 45-degree sides, the loudspeaker will be directed upward at a 45-degree angle. This facilitates use of such a loudspeaker enclosure as a monitor speaker, which is directed not toward the audience but toward the performers. The use of a monitor is desirable because it gives a performer the ability to hear a truer rendition of the sounds that are being produced than does relying on the sound reflected back from room walls, or transmitted circuitously through the air.

[0009] The use of such enclosures has heretofore suffered from the lack of a suitable versatile and efficient system for interlocking and stacking the enclosures. This is because the conventional corner protector/interlock cannot be applied to the corners formed by the 45-degree back, which corners have an included angle of 135 degrees. Although corner protectors have been devised for these angles, they have not heretofore efficiently solved the problem of enabling the enclosures to be stacked and interlocked to other, rectangular enclosures, or to enclosures of the same type.

[0010] It is desirable for example to be able to place a conventional rectangular enclosure on one having 45 degree backs, as depicted by the enclosures shown in **FIG. 3**. It is also desirable to be able to use the 45 degree-backed enclosures stacked one on another using what is conventionally called their bottom sides, as shown in **FIG. 4**, and to stack them on their six-edged sides, as shown in **FIG. 5**.

[0011] Some of the prior art protectors have been able to stack for rectangular enclosures, but require special attention to the orientation of the protector so that a mating surface in the proper alignment is provided. This requires that each of the 135 degree angle corners be dealt with specially, and causes corresponding increases in the cost of manufacture of such enclosures.

[0012] Therefore a need exists for a corner protector system and corner protector devices which will efficiently enable the stacking and interlocking of both conventional rectangular enclosures and angled-back enclosures, either to enclosures of the same kind or to mixtures of enclosures of each kind having compatible corner spacing and orientation, without special adaptations being made for each different corner of the enclosures.

SUMMARY OF THE INVENTION

[0013] Accordingly, it is an object of the present invention to provide a corner protector system and corner protector devices for fitting to the corners of enclosures, cases, containers, boxes, and the like, where it is desired to enable the enclosures or cases to be safely stacked.

[0014] It is a further object of the present invention to provide a corner protector system and corner protector devices that can be efficiently tooled, manufactured and stocked.

[0015] It is yet another object of the present invention to provide an interlocking, stackable corner protector which can accommodate both 90 degree and 135 degree corners.

[0016] It is yet another object of the present invention to provide an interlocking, stackable corner protector which will allow stacking and interlocking with minimum need for specially orienting the adjacent enclosures, or the protectors.

[0017] These and other objects of the present invention are accomplished by providing an improved design of corner protectors for use with stackable enclosures. The corner protectors described provide both protection of the protrud-

ing corners and fixation of stacked enclosures into an aligned position so that they do not slide apart, become unbalanced and thereby become dislodged. These functions are provided by means of a specialized interlock element having a novel geometry. The novel geometry allows the production of one type of protector which can be applied to any 90-degree cornered enclosure and which will still mate to an identical, but differently oriented protector mounted on the adjacent corner of another enclosure having a similar facing dimension.

[0018] The above, and other features and advantages of the present invention will be set forth more completely in the description of the preferred embodiment, including the following drawings.

BRIEF DESCRIPTION OF THE DRAWINGS

[0019] **FIG. 1A** is an overall perspective view, with the inside edge to the foreground, of an interlocking, stackable corner protector suitable for application to 90 degree corners, in accordance with the present invention.

[0020] **FIG. 1B** is an overall perspective view, with the outside edge to the foreground, of an interlocking, stackable corner protector suitable for application to 90-degree corners, in accordance with the present invention.

[0021] **FIG. 2A** is an overall perspective view, with the outside edge to the foreground, of an interlocking, stackable corner protector suitable for application to 135 degree corners, in accordance with the present invention.

[0022] **FIG. 2B** is an overall perspective view, with the outside and front or back edges to the foreground, of an interlocking, stackable corner protector suitable for application to 135 degree corners, in accordance with the present invention.

[0023] **FIG. 3** is an overall perspective view of interlocking, stackable corner protector in accordance with the present invention, installed on enclosures of the type used to contain and transport amplifier equipment, loudspeakers, and the like. The upper enclosure contains only 90 degree corners and is fitted with suitable 90 degree corner protectors in accordance with the present invention. The lower enclosure has both 90 degree and 135 degree corners, each of which is fitted with corner protectors of the appropriate angle in accordance with the present invention.

[0024] **FIG. 4** is an overall perspective view of two loudspeaker enclosures having interlocking, stackable corner protectors in accordance with the present invention, installed on loudspeaker enclosures with rear corners having 135 degree angles.

[0025] **FIG. 5** is an overall perspective view of two loudspeaker enclosures of the type shown in **FIG. 4**, having interlocking, stackable corner protectors in accordance with the present invention installed. The enclosures are shown in process of being aligned for stacking on their sides, showing the complementary fit of the adjacent corner protectors in this configuration.

DESCRIPTION OF THE PREFERRED EMBODIMENT

[0026] In the following description, the term "enclosure" will be used to describe any of many different types of enclosures, cases, containers, boxes, and the like, having the general characteristic that they enclose a volume, have sides that are generally planar, and have corners that are the result of three intersecting sides. For the purpose of this discussion, it will be assumed that the corners of the enclosures are the result of intersections of the sides at angles of approximately 90 degrees or approximately 135 degrees, and that the sides are generally planar. It will be appreciated however that the sides may in practice be perforated for mounting of loudspeaker drivers, for example, or otherwise adapted to a particular use, and that the material of the sides may in some instances only partially extend over the areas defined by the edges of the enclosure.

[0027] An attractive feature of the present invention is that the use of only two configurations of corner protectors allows the protection of all corners of enclosures in which the sides intersect at generally 90 degree or 135 degree angles, and interlocking stacking of compatible corners. A first version of the protector in accordance with the present invention can be used on any corner of a rectangular solid, while maintaining the interlocking feature, regardless of which corner of the enclosure it is installed on. A second version of the corner protectors in accordance with the present invention applies to corners having one 135-degree angle, maintaining the ability to interlock between matching sides, even when enclosures of the more common style, having only 90 degree corners, are stacked with enclosures having some 135 degree corners.

[0028] The geometry which makes this compatibility possible is a pattern of raised and lowered surfaces which is symmetrical about one axis and anti-symmetrical, or complementary, about another axis. The geometry of the preferred embodiment of the invention is described in detail in the following paragraphs.

[0029] In **FIG. 1A**, **FIG. 1B**, **FIG. 2A**, and **FIG. 2B** the two versions, **1** and **2**, of compatible, stackable, interlocking corner protectors in accordance with the present invention are shown. The two versions work together as a system.

[0030] In **FIG. 1A** and **FIG. 1B** is shown the first type of corner protector **1**, intended for use on corners of the most common type of enclosure, a rectangular box. The protector **1** has at least two sides, **11** and **12**, which are generally orthogonal, and which adapt to and attach to the planes of one pair of sides of an enclosure. The inner sides of the protector are adjacent to the outside angle formed by the sides. On the first side **11** and the second side **12** are patterns **61** and **62** respectively of raised and depressed elements consisting of generally half-circular areas, which are either raised or depressed with respect to the surfaces of the sides **11** and **12**. The shapes of the patterns thus produced must be generally symmetrical with reference to the axes of symmetry and generally complementary with respect to the axes of complement. In this description, the term "complementary" shall mean that the raised parts on one part of the patterns correspond to similarly shaped depressed parts on the opposite side of the axis of complement.

[0031] Although the shapes of these patterns are generally symmetrical with reference to axes of symmetry and generally complementary with respect to axes of complement, they have differing orientations with respect to the edges of the enclosure to which they will be mounted. For convenience, the pattern of the first side **11** will be referred to as

the first pattern **61**, while the pattern of the second side will be referred to as the second pattern **62**

[**0032**] The specific location of the patterns is not important from a theoretical standpoint, except that the centers of the patterns must be located such that the patterns will align with a complimentary pattern on an enclosure having a matching foot print. Three views of such match ups, showing the mounting of both type **1** protectors and type **2** protectors are shown in **FIG. 3**, **FIG. 4**, and **FIG. 5**.

[**0033**] For practical reasons, the pattern should be located close to the intersections of the sides, i.e.: close to the corners. It is also important that the protectors be mounted such that the interlocking patterns are located at the same positions with respect to the sides of the enclosure, for each matching corner. The protectors shown in **FIG. 1**A, and **FIG. 1B** are fitted with flanges **81** and **82** which, in addition to protecting the edges of the enclosure in the region of the corners, facilitate precise placement and alignment of the protector; if the protector **1** is placed with its sides and the flanges snug to the enclosure sides, the patterns on the protectors will automatically align to complementary patterns of other matching protectors mounted on other enclosures having the same foot print.

[**0034**] The orientations of the patterns **61** and **62** on their respective sides, **11** and **12**, are critical. To accurately describe the orientation, the pattern **61** on the first side **11** may be considered as having two axes: a first axis of symmetry **13**, and a first axis of complement **14**. These axes are generally orthogonal to each other and lie on the outer surface of the first side **11**. The first axis of symmetry **13** is parallel to the line of intersection **17** formed by the intersection of the first side **11** and the second side **12**.

[**0035**] The pattern **62** on the second side **12** may be similarly considered as having two axes: a second axis of symmetry **15**, and a second axis of complement **16**. These axes are also generally orthogonal to each other and lie close to or on the outer surface of the second side **12**. The second axis of symmetry **15** is parallel to the line of intersection **17** formed by the intersection of the first side **11** and the second side **12**.

[**0036**] The patterns are matching in the sense that if they were detached from the protector **1** and rotated to similar orientations, they would appear to be identical. However, they are oriented in a fixed position on the protectors such that when the protector **1** is rotated as necessary to fit any given corner, the pattern is automatically aligned to match the pattern on another protector **1**, on another enclosure having a similar foot print.

[**0037**] The first axis of symmetry **13** and the second axis of symmetry **15** are spaced equidistant from the line of intersection **17** formed by the intersection of the first side **11** and the second side **12**.

[**0038**] The first axis of complement **14** and the second axis of complement **16** lie generally in a plane that is perpendicular to the line of intersection **17**, formed by the intersection of the first side **11** and the second side **12**. This plane is located such that the axes of complement are spaced away, from the edges of the enclosure which are parallel to the plane, by the same distance that the axes of symmetry are spaced away from the line of intersection **17**.

[**0039**] An imaginary reference point may be considered to be located at the edge of the first pattern **61** on the axis of complement **14** adjacent to the line of intersection **17** of the first side **11** and the second side **12**.

[**0040**] On the second side **12** is located a second pattern **62** of raised and depressed elements, which are areas of the surface raised or depressed with respect to the nominal surface of the second side **12**. This pattern is essentially equivalent to the first pattern **61** translated to the second side **12** and rotated 180 degrees about an axis that is generally orthogonal to both the second axis of symmetry **15** and the second axis of complement **16**. The result of this rotation would be that a reference point on the second pattern **62** which corresponds to the imaginary reference point on the first pattern **61** would be oriented toward the line of intersection **17** formed by the intersection of the first side **11** and the second side **12**.

[**0041**] The first protector **1** is capable of stacking and interlocking either with the second protector **2** or with another of the first type of protector **1**. Alignment and interlocking between two of the first type of protectors **1** is illustrated in **FIG. 3**, by the protectors **1** on the fronts of the two enclosures shown. Alignment and interlocking of type **1** with type **2** protectors is shown at the back and bottom of the upper enclosure in **FIG. 3**.

[**0042**] A second type of corner protector **2** is shown in **FIG. 2**A and **FIG. 2B**. This is an interlocking, stackable corner protector for enclosing and protecting the corners of enclosures which have corners combining 90 degree and 135 degree angles, and for enabling such enclosures to be stacked and interlocked with enclosures which have identical or compatible corner protectors.

[**0043**] The second type of protector **2** preferably has three sides, identified herein as first side **21**, second side **22**, and third side **23**. The planes of the first side **21** and the second side **22** are fixed at a position generally 135 degrees from one another.

[**0044**] The plane of the third side **23** is positioned generally orthogonally to the planes of the first side **21** and the second side **22**. The third side **23** is adjacent to the inside angle which is formed by the intersection of the plane of the third side **23** with the line of intersection **70**.

[**0045**] On the first side **21** and the second side **22** are located the same patterns of raised and depressed elements described above, consisting of generally half-circular elements which are raised and depressed with respect to the surfaces of the sides **21** and **22**. In addition there is a similar pattern on the third side **23**. The pattern on the first side **21** will be referred to as the first pattern **71**, the pattern on the second side will be referred to as the second pattern **72**, and the pattern on the third side **23** will be referred to as the third pattern **73**.

[**0046**] As in the instance of the first protector **1**, the pattern on the first side **21** may be considered as having two axes: a first axis of symmetry, **24** in **FIG. 2**A, and a first axis of complement, **25** in **FIG. 2A**. The axes are generally orthogonal to one another and lie on the outer surface of the first side **21**. The first axis of symmetry **24** is perpendicular to the line of intersection **70** formed by the intersection of the first side **21** and the second side **22**.

[0047] The pattern on the second side **22**, similarly, may be considered as having two axes: a second axis of symmetry **26**, and a second axis of complement **27**. These axes are also generally orthogonal to one another and lie close to or on the outer surface of the second side **22**. The second axis of symmetry **26** is perpendicular to the line of intersection **70** formed by the intersection of the first side **21** and the second side **22**.

[0048] The third side may be considered to have a third axis of symmetry **28** and a third axis of complement **29**, which axes are generally orthogonal to one another and lie close to or on the outer surface of the third side.

[0049] The third axis of symmetry **28** is generally orthogonal to the line of intersection **70** of the first side **21** and the second side **22**, and is spaced from said line of intersection by a distance that is preferably equal to the distance by which the first axis of complement **25** is spaced from the line of intersection **70** formed by the intersection of the first side **21** and the second side **22**.

[0050] The third axis of complement **29** intersects the line of intersection **70** of the first side **21** and the second side **22**, and bisects the angle formed by the intersection of the first side **21** and the second side **22**.

[0051] The first axis of symmetry **24** and the second axis of symmetry **26** are spaced equidistant from the line of intersection **74** formed by the intersection of the first side **21** with the third side **23**, and from the line of intersection **76** formed by the intersection of the second side **22** with the third side **23**, respectively.

[0052] The first axis of complement and the second axis of complement lie generally in a plane that is parallel to the line of intersection **70**, formed by the intersection of the first side **21** and the second side **22**. The axes of complement **25** and **27** are spaced equidistant from the line of intersection **70** formed by the intersection of the first side **21** and the second side **22**.

[0053] An imaginary reference point may be considered to be located at the edge of the first pattern **71** on the axis of complement **25** adjacent to the line of intersection **74** of the first side **21** and the third side **23**.

[0054] The second pattern **72** is essentially equivalent to a copy of the first pattern **71** translated without rotation to a location at the second axis of symmetry **26** and the second axis of complement **27**. The result of this translation would be that a reference point on the second pattern **72** corresponding to the imaginary reference point on the first pattern **71** would be adjacent to the line of intersection **76** formed by the intersection of the second side **22** and the third side **23**.

[0055] As with the patterns on the first type of protector **1**, above, the shapes of the patterns must be generally symmetrical with reference to the axes of symmetry and generally complementary with respect to the axes of complement. The patterns are identical in the sense that their shapes match, and that they are symmetrical about their respective axis of symmetry, and complementary about their respective axes of complement. Preferably, all of the patterns of the second protector **2**, along with those of the first protector **1**, should be considered to be matching in this sense. In the general case though, the third pattern may differ in contour from the first and second patterns, and may be spaced at a distance from the enclosure edges that differs from the spacing of the first and second patterns. For reasons of style and efficiency of tooling, however, the patterns will be preferably the same. For reasons of style and strength, the placement of the third pattern, with respect to the edges of the enclosure, will preferably be similar to the placement of the first and second patterns, and all will preferably be placed close to the edges of the enclosure.

[0056] The same structure whose geometry allows the protectors to serve as interlocking elements when mated with an identical or compatible protector, also serve as a foot or spacer when the enclosure is placed on a plane surface. The raised portions of the patterns serve this function by reason of the fact that they are required to be elevated with respect to the surfaces to which they are mounted. It only requires that they be made of a material that is sufficiently strong, and in a shape that is adapted to serve as a foot or a spacer.

[0057] The system and the unique structure allows for efficient production and stockage. By employing the principles described herein, merely two types of protectors need be fabricated and stocked, thereby reducing tooling costs and parts stocks. Thus, the first type of protector **1**, can be fabricated from a first tool, and is useable on any 90 degree corner of an enclosure. The second type of protector, which can be fabricated from a second tool, is useable on any corner which combines 90 degree and 135 degree angles.

[0058] Depending upon the actual contours of the corners and edges of the enclosures to which they will be fitted, the protectors may have a more or less rounded corner at the intersection of the two sides, and at the intersections of the flanges with the two sides.

[0059] The patterns described and illustrated as the preferred embodiment are half-circular shapes, one of the better and more useful and attractive shapes that can be employed. However, they are merely one example of the shapes that can be devised, the only requirements being that said shapes meet the requirements of symmetry and complementation described above.

[0060] In general, although particular embodiments of the present invention have been described, it will be appreciated by those skilled in the art that the present invention is not limited merely to those embodiments shown. Many variations and modifications can be made without departure from the spirit of the invention. For example, the materials, the particular shapes, and the arrangement of the body and the shape and arrangements of the interlocking members, as well as their particular locations, can be changed from those which are illustrated, as has been mentioned. These and other variations are specifically contemplated. Accordingly, variation of the preferred form and the particulars as described for the present invention may be undertaken without departure from the scope of the invention which is defined only by the claims which follow.

What is claimed is:

1. An interlocking, stackable corner protector for enclosing and protecting the corners of enclosures having 90 degree corners, and for enabling said enclosures to be stacked and interlocked with enclosures having identical or compatible protectors, comprising:

a first and a second side, the planes of each side oriented and fixed at a position generally 90 degrees from one another, and having inner surfaces that are adjacent to the inside angle formed by the sides and outer surfaces that are adjacent to the outside angle formed by the sides,

said first side having a first axis of symmetry and a first axis of complement, which axes are generally orthogonal to one another and lie close to or on the outer surface of the first side, the first axis of symmetry being parallel to the line of intersection of the first and the second side,

said second side having a second axis of symmetry and a second axis of complement, which axes are generally orthogonal to one another and lie close to or on the outer surface of the second side,

said second axis of symmetry being parallel to the line of intersection of the first and the second side, and spaced from said line of intersection by a distance generally equal to the distance by which the first axis of symmetry is spaced from the line of intersection,

said second axis of complement lying generally in a plane that includes the first axis of complement;

a first pattern of raised and depressed elements which are raised and depressed with respect to the outer surface of the first side, the contours of which pattern are generally symmetrical with reference to the first axis of symmetry and generally complementary with respect to the first axis of complement, and having a reference point oriented toward the line of intersection of the first and second sides, and;

a second pattern of raised and depressed elements which are raised and depressed with respect to the outer surface of the second side, which pattern is essentially equivalent to the first pattern rotated 180 degrees about to an axis that is generally orthogonal to the second axis of symmetry and the second axis of complement, so that the reference point of the second pattern is oriented toward the line of intersection of the first and second sides.

2. An interlocking, stackable corner protector for enclosing and protecting the corners of Enclosures having corners combining 90 degree and 135 degree angles, and for enabling said enclosures to be stacked and interlocked with enclosures having identical or compatible protectors interlocked, comprising:

a first and a second side, the planes of each side oriented and fixed at a position generally 135 degrees from one another, and having inner surfaces that are adjacent to the inside angle formed by the sides and outer surfaces that are adjacent to the outside angle formed by the sides,

said first side having a first axis of symmetry and a first axis of complement, which axes are generally orthogonal to one another and lie close to or on the outer surface of the first side, the first axis of complement being parallel to the line of intersection of the first and the second side,

said second side having a second axis of symmetry and a second axis of complement, which axes are generally orthogonal to one another and lie close to or on the outer surface of the second side,

said second axis of complement being parallel to the line of intersection of the first and the second side, and spaced from said line of intersection by a distance generally equal to the distance by which the first axis of complement is spaced from the line of intersection,

said second axis of symmetry lying generally in a plane that includes the first axis of symmetry;

a first pattern of raised and depressed elements which are raised and depressed with respect to the outer surface of the first side, the contours of which pattern are generally symmetrical with respect to the first axis of symmetry and generally complementary with respect to the first axis of complement, and having a reference point oriented toward the line of intersection of the first and third sides;

a second pattern of raised and depressed elements which are raised and depressed with respect to the outer surface of the second side, which pattern is essentially a copy of the first pattern that has been translated to a position on the second side, the reference point of which pattern is oriented toward the line of intersection of the second and third sides, the contours of which pattern are generally symmetrical with reference to the second axis of symmetry and generally complementary with respect to the second axis of complement,

a third side, the plane of which side is positioned generally orthogonally to the planes of the first and second sides, and having an inner surface that is adjacent to the inside angles formed by the third side with the first and second sides, and an outer surface that is adjacent to the outside angles formed by the third side with the first and second sides,

said third side having a third axis of symmetry and a third axis of complement, which axes are generally orthogonal to one another and lie close to or on the outer surface of the third side,
said third axis of symmetry being orthogonal to the line of intersection of the first and the second sides, and spaced from said line of intersection by a distance generally equal to the distance by which the first axis of complement is spaced from the line of intersection,
said third axis of complement intersecting the line of intersection of the first and second sides, and bisecting the angle formed by the first and second sides, and;

a third pattern of raised and depressed elements which are raised and depressed with respect to the outer surface of the third side, which pattern is essentially a copy of the first pattern, the reference point of which is oriented away from the line of intersection of the first and second sides, the contours of which pattern are generally symmetrical with respect to the third axis of symmetry and generally complementary with respect to the third axis of complement.

3. A system of interlocking, stackable corner protectors, utilizing compatible protectors suitable for 90 degree corners and combinations of 90 degree and 135 degree corners, comprising:

a first stackable corner protector for enclosing and protecting the corners of enclosures having 90 degree corners, and for enabling said enclosures to be stacked and interlocked with enclosures having identical or compatible protectors, comprising:

a first and a second side, the planes of each side oriented and fixed at a position generally **90** degrees from one another, and having inner surfaces that are

adjacent to the inside angle formed by the sides and outer surfaces that are adjacent to the outside angle formed by the sides,

said first side having a first axis of symmetry and a first axis of complement, which axes are generally orthogonal to one another and lie close to or on the outer surface of the first side, the first axis of symmetry being parallel to the line of intersection of the first and the second side,

said second side having a second axis of symmetry and a second axis of complement, which axes are generally orthogonal to one another and lie close to or on the outer surface of the second side,
said second axis of symmetry being parallel to the line of intersection of the first and the second side, and spaced from said line of intersection by a distance generally equal to the distance by which the first axis of symmetry is spaced from the line of intersection,
said second axis of complement lying generally in a plane that includes the first axis of complement;

a first pattern of raised and depressed elements which are raised and depressed with respect to the outer surface of the first side, the contours of which pattern are generally symmetrical with reference to the first axis of symmetry and generally complementary with respect to the first axis of complement, and having a reference point oriented toward the line of intersection of the first and second sides, and;

a second pattern of raised and depressed elements which are raised and depressed with respect to the outer surface of the second side, which pattern is essentially equivalent to the first pattern rotated 180 degrees about an axis that is generally orthogonal to the second axis of symmetry and the second axis of complement, so that the reference point of the second pattern is oriented toward the line of intersection of the first and second sides;

a second interlocking, stackable corner protector for enclosing and protecting the corners of enclosures having corners combining 90 degree and 135 degree angles, and for enabling said enclosures to be stacked and interlocked with enclosures having identical protectors or the first corner protector interlocked, comprising:

a first and a second side, the planes of each side oriented and fixed at a position generally 135 degrees from one another, and having inner surfaces that are adjacent to the inside angle formed by the sides and outer surfaces that are adjacent to the outside angle formed by the sides,
said first side having a first axis of symmetry and a first axis of complement, which axes are generally orthogonal to one another and lie close to or on the outer surface of the first side, the first axis of complement being parallel to the line of intersection of the first and the second side,
said second side having a second axis of symmetry and a second axis of complement, which axes are generally orthogonal to one another and lie close to or on the outer surface of the second side, said second axis of comp being parallel to the line of intersection of the first and the second side, and spaced from said line of intersection by a distance generally equal to the distance by which the first axis of complement is spaced from the line of intersection, said second axis of symmetry lying generally in a plane that includes the first axis of symmetry;
a first pattern of raised and depressed elements which are raised and depressed with respect to the outer surface of the first side, the contours of which pattern are generally symmetrical with respect to the first axis of symmetry and generally complementary with respect to the first axis of complement, and having a reference point oriented toward the line of intersection of the first and third sides;

a second pattern of raised and depressed elements which are raised and depressed with respect to the outer surface of the second side, which pattern is essentially a copy of the first pattern that has been translated to a position on the second side, the reference point of which pattern is oriented toward the line of intersection of the second and third sides, the contours of which pattern are generally symmetrical with reference to the second axis of symmetry and generally complementary with respect to the second axis of complement,

a third side, the plane of which side is positioned generally orthogonally to the planes of the first and second sides, and having an inner surface that is adjacent to the inside angles formed by the third side with the first and second sides, and an outer surface that is adjacent to the outside angles formed by the third side with the first and second sides,
said third side having a third axis of symmetry and a third axis of complement, which axes are generally orthogonal to one another and lie close to or on the outer surface of the third side, said third axis of symmetry being orthogonal to the line of intersection of the first and the second sides, and spaced from said line of intersection by a distance generally equal to the distance by which the first axis of complement is spaced from the line of intersection, said third axis of complement intersecting the line of intersection of the first and second sides, and bisecting the angle formed by the first and second sides, and;
a third pattern of raised and depressed elements which are raised and depressed with respect to the outer surface of the third side, which pattern is essentially a copy of the first pattern, the reference point of which is oriented away from the line of intersection of the first and second sides, the contours of which pattern are generally symmetrical with respect to the third axis of symmetry and generally complementary with respect to the third axis of complement.

4. The device of claim 1, wherein the patterns are generally half circles.

5. The device of claim 2, wherein the patterns are generally half circles.

6. The devices of claim 3, wherein the patterns are generally half circles.

* * * * *