Feb. 27, 1962 O. O. AMUNDSEN ETAL 3,022,769

UNIVERSAL TOOL ELEMENT RETAINER FOR ROTARY-HAMMER DEVICES

Filed May 18, 1960 2 Sheets-Sheet 1

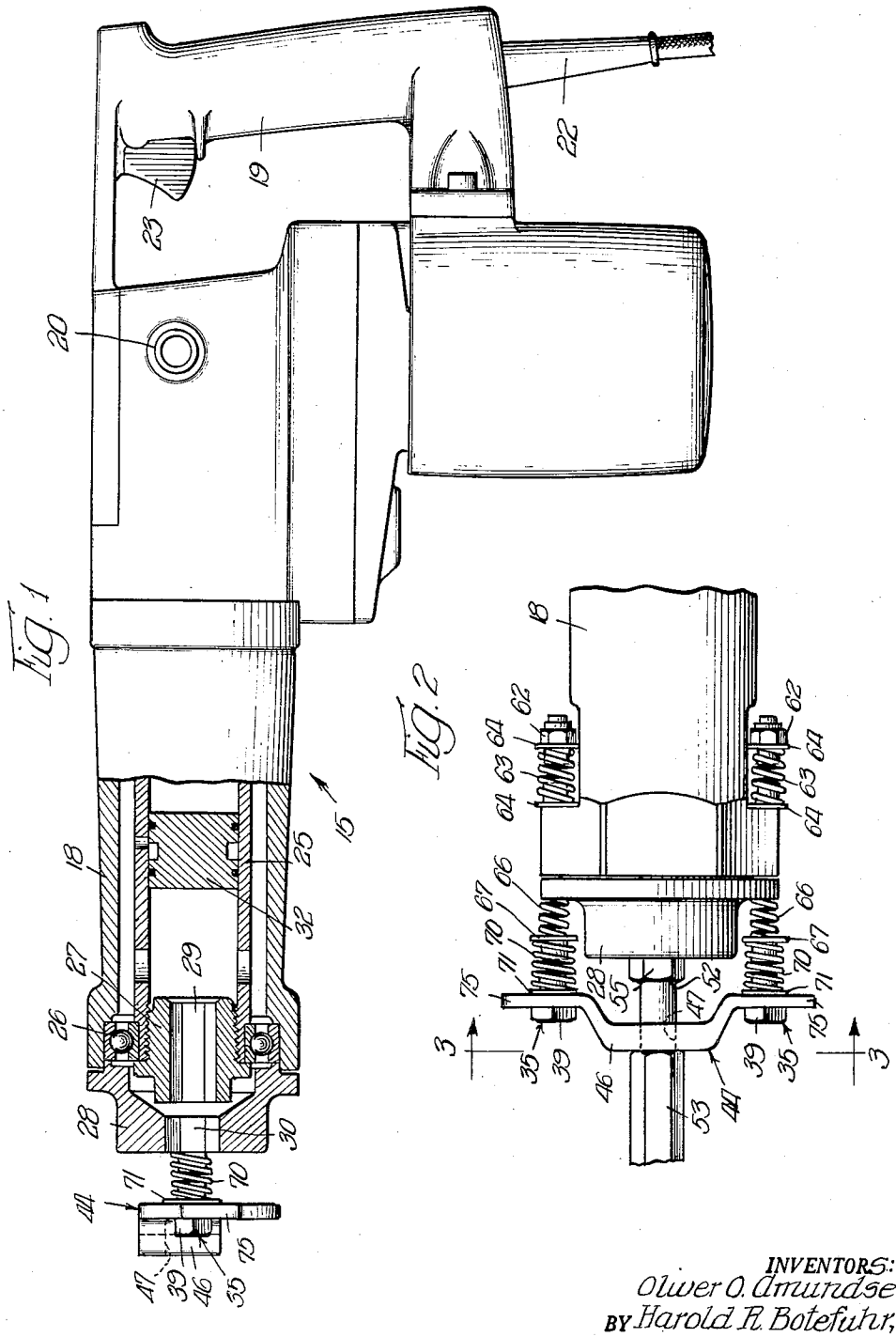

INVENTORS:
Oliver O. Amundsen,
BY Harold R. Botefuhr,
Cromwell, Greist & Warden
Attys

Feb. 27, 1962 O. O. AMUNDSEN ETAL 3,022,769

UNIVERSAL TOOL ELEMENT RETAINER FOR ROTARY-HAMMER DEVICES

Filed May 18, 1960 2 Sheets-Sheet 2

Fig. 3

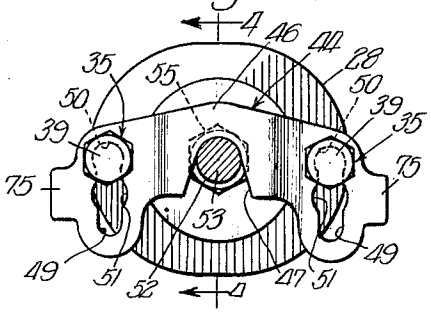

Fig. 4

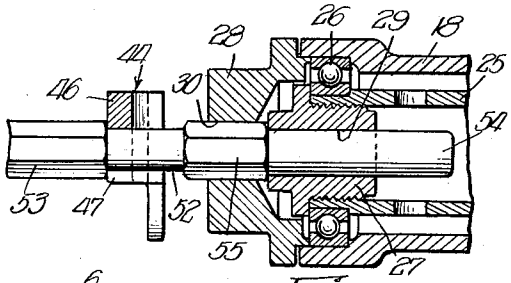

Fig. 6

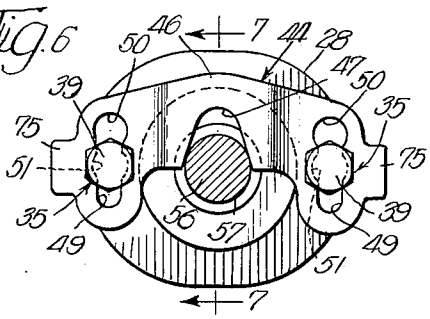

Fig. 5

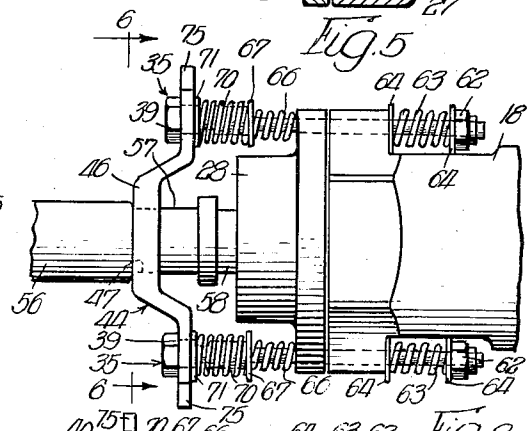

Fig. 7

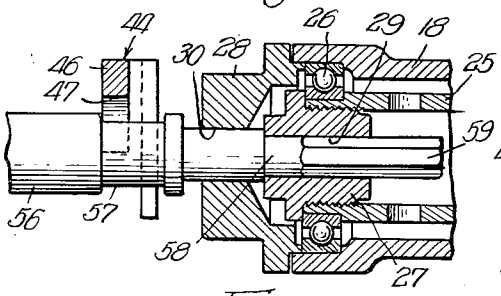

Fig. 8

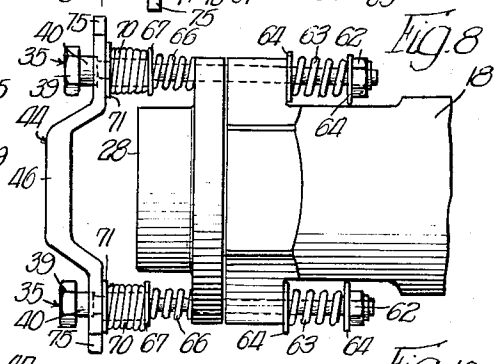

Fig. 9

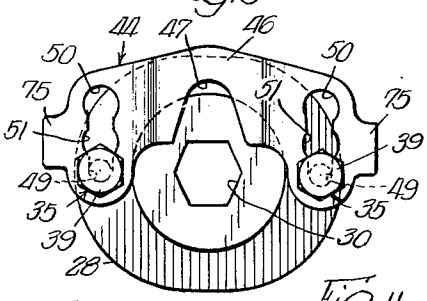

Fig. 10

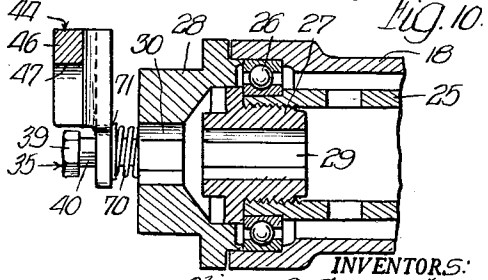

Fig. 11

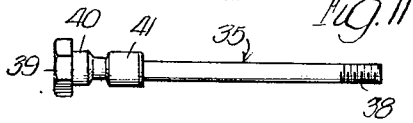

INVENTORS:
Oliver O. Amundsen,
BY Harold R. Botefuhr,
Cromwell, Greist + Warden
attys.

United States Patent Office

3,022,769

Patented Feb. 27, 1962

1

3,022,769

UNIVERSAL TOOL ELEMENT RETAINER FOR ROTARY-HAMMER DEVICES

Oliver O. Amundsen and Harold R. Botefuhr, Chicago, Ill., assignors to Skil Corporation, Chicago, Ill., a corporation of Delaware

Filed May 18, 1960, Ser. No. 30,006
8 Claims. (Cl. 121—32)

The present invention relates to a tool element retainer for rotary-hammer devices and, more particularly, to a retainer for retaining in such rotary-hammer devices one-piece tool elements having integral shank portions provided with necked or reduced-in-diameter portions defining annular grooves.

An important object of the invention is to provide a new and improved retainer for retaining tool elements in a rotary-hammer device during rotary and hammer-like actuation thereof and during withdrawal of such tool elements from the work.

Another important object of the invention is to provide a new and improved tool element retainer for a rotary-hammer device wherein the retainer is resiliently mounted on the nose end of the rotary-hammer device and is embracingly engageable in an annular groove formed in the tool element mounted in the device for actuation thereby.

A further important object of the invention is to provide a new and improved tool element retainer of the character described which is readily adjustable between a series of positions for retaining engagement in tool element grooves of various diameters.

A further object of the invention is to provide a new and improved tool element retainer of the character described which is resiliently latched in any one of its tool element retaining positions.

Further objects of the invention are to provide a new and improved tool element retainer of the character described which is readily movable to an out-of-the-way position for inserting tool elements in the rotary-hammer device or removing them therefrom, which is: easily and economically fabricated; readily assemblable on the nose end of a rotary-hammer device; rugged; and, requires no lubrication or maintenance.

Certain other objects of the invention will, in part, be obvious, and will in part appear hereinafter.

For a more complete understanding of the nature and scope of the invention reference may now be had to the accompanying drawings wherein:

FIG. 1 is a side elevational view of a rotary-hammer device with the nose portion thereof being shown in vertical section including a tool element retainer embodying the invention, mounted on the nose portion of the device;

FIG. 2 is a top plan view of the nose portion of the rotary-hammer device of FIG. 1 and showing a tool element having a small diameter annular groove mounted in the device;

FIG. 3 is a vertical section taken generally on the line 3—3 of FIG. 2;

FIG. 4 is a vertical section taken generally on the line 4—4 of FIG. 3;

FIG. 5 is a top plan view similar to FIG. 2 and showing a tool element having a large diameter annular groove mounted in the device;

FIG. 6 is a vertical section taken generally on the line 6—6 of FIG. 5;

FIG. 7 is a vertical section taken generally on the line 7—7 of FIG. 6;

FIG. 8 is a top plan view similar to FIG. 2 with the retainer shown in its out-of-the-way position for inserting tool elements in the device and removing them therefrom;

FIG. 9 is a front end view of the device as shown in FIG. 8;

2

FIG. 10 is a vertical section taken generally on the line 10—10 of FIG. 9; and

FIG. 11 is a side elevational view of one of the guide-posts of the tool element retainer.

The tool element retainer of the invention is adapted for use with a hand-operable power tool such as the rotary-hammer device 15 shown in FIG. 1. The rotary-hammer device 15 includes a multi-part housing including a tubular portion 18, a first handgrip 19, and a second gripping handle 20 which projects laterally from one side of the device 15. The rotary-hammer device 15 further includes an electric motor (not shown) which is adapted to be connected to a power source through a power cord 22. The electric drive motor circuit includes a conventional "on-and-off" switch which is controlled by a trigger-like member 23 associated with the handgrip 19.

The rotary-hammer device 15 includes a cylinder 25 which is rotatably mounted within the tubular housing portion 18 and is operably connected through a suitable gear train to the electric motor whereby during energization of the motor, the cylinder 25 may be rotated within the housing portion 18. As shown in FIG. 1, the forward end of the cylinder 25 is rotatably mounted in the the forward end of the housing portion 18 by a suitable bearing 26. An axially bored, exterially threaded drive member 27 is threadedly secured in the forward end of the cylinder 25 for rotation therewith, and an axially bored nonrotatable nose member 28 is secured on the forward end of the tubular housing portion 18. The bore of the drive member 27 is provided with an internal hexagonal formation 29 and the bore of the nose member 28 is provided with an internal hexagonal formation 30.

Tool elements adapted to be actuated by the rotary-hammer device 15 are provided with shank portions adapted to be inserted through the bores 30 and 29 of the nose member 28 and the drive member 27, respectively. Tool elements adapted to be rotated have shank portions provided with external hexagonal formations adapted for rotary driving engagement with the hexagonal formation 29 of the drive member 27 whereby such tool elements are operably connected for rotation with the cylinder 25. Non-rotatable tool elements are provided with rounded shank portions extending through the drive member 27 whereby to prevent rotary driving engagement thereof with the cylinder 25. Such tool elements may be provided with external hexagonal formations for sliding interengagement with the internal hexagonal formation 30 of the nose member 28 whereby to insure non-rotation thereof.

Rotatable or non-rotatable tool elements adapted for reciprocal hammer-like actuation are provided with long shank portions which project through the drive member 27 and into the cylinder 25 for impact engagement by a striker member 32 (FIG. 1) which is pneumatically reciprocated within the rotary cylinder 25. The striker member 32 is pneumatically reciprocated in the cylinder 25 as a result of reciprocation in the rear end of the cylinder 25 of a power piston (not shown) which is operably connected in known manner to the electric motor. Suitable porting is provided in the cylinder 25 for the pneumatic actuation of the striker member 32. Rotary-hammer devices of this type are fully disclosed in co-pending applications Serial No. 18,550, filed March 30, 1960, and Serial No. 19,874, filed April 4, 1960. Thus, the striker member 32 may be reciprocally actuated simultaneously with rotation of the cylinder 25 whereby to provide a tool element mounted in the device with a combined rotary-hammering action. Tool elements adapted for non-reciprocal actuation are provided with short shank portions which terminate within the drive

member 27 and do not project into the cylinder 25 for impact engagement by the striker member 32. When the short shank tool elements are mounted in the rotary-hammer device 15, certain of the ports in the cylinder 25 become effective to render the striker member 32 inoperable whereby to prevent undue wear of the parts.

It is necessary to provide suitable means for retaining all of the above discussed tool elements in the rotary-hammer device 15 during actuation thereof, particularly those tool elements adapted to have a hammer-like action imparted thereto by the striker member 32, and also for retaining such tool elements in the device 15 when they are being withdrawn from the work. Suitable one-piece tool elements having specially designed integral shank portions have been developed for use in the rotary-hammer device 15.

The shank portions of these one-piece tool elements are provided with necked or reduced-in-diameter portions defining annular grooves which are adapted for co-action with the tool element retainer of the invention whereby the tool elements are retained in the rotary-hammer device 15 both during reciprocal actuation thereof and when they are being withdrawn from the material being worked. These specially designed tool elements fall into two general groups. One group of tool elements has a relatively small diameter annular groove formed thereon for interengagement with the tool element retainer and the other group of tool elements has a relatively larger diameter annular groove formed thereon for interengagement with the tool element retainer.

The present invention is primarily concerned with the development of a new and improved universal tool element retainer for use with the rotary-hammer device 15 and which is adapted for retaining engagement with tool elements having either the small diameter annular grooves or the large diameter annular grooves. A universal tool element retainer embodying the invention may best be described with reference to FIGS. 2, 3 and 4. A pair of guide-posts 35 are slidably mounted in a pair of longitudinally extending through bores extending through both an outer flange portion of the nose member 28 and an enlarged nose end portion of the tubular housing portion 18. The bores are disposed on opposite sides of the rotary axis of the rotary-hammer device 15 and in a horizontal plane extending therethrough. As best shown in FIG. 11, each guide-post 35 is provided with an external thread 38 on its rear end and an integral head 39 on its forward end with the head 39 being provided with a reduced-in-diameter portion 40 disposed rearwardly thereof. The shank of each guide-post 35 is characterized by an enlarged diameter portion or integral abutment member 41 which is spaced rearwardly from the reduced-in-diameter head portion 40.

An elongated bracket or saddle member 44 is mounted on the forward ends of the guide-posts 35 and is provided with a forwardly offset central portion 46 (FIG. 2). The forwardly offset portion 46 of the bracket 44 is provided with a downwardly opening generally V-shaped slot 47 which is in vertical alignment with the rotary axis of the rotary-hammer device 15. As best illustrated in FIG. 3, each end of the bracket 44 is mounted on one of the guide-posts 35 by means of a vertically elongated slot 49 having a width slightly greater than the diameter of the shank portion of the guide-post 35. Each of the slots 49 is provided with a pair of enlarged portions 50 and 51 having diameters slightly greater than the diameter of the reduced-in-diameter head portions 40 of the guide-posts 35. One enlarged portion 50 is located at the upper end of each slot 49 with the other enlarged portion 51 being spaced downwardly therefrom approximately midway between the opposite ends of the slot 49. Due to the slotted mounting of the bracket 44 on the guide-posts 35, the bracket 44 is movable not only longitudinally of the guide-posts 35 but also in a direction normal thereto.

The central portion of the bracket 44 containing the generally V-shaped slot 47 is adapted for embracing engagement in an annular groove formed in the shank of a tool element mounted in the rotary-hammer device 15 whereby to retain the tool element in the device 15 during rotary and/or hammering actuation thereof. In the embodiment of the tool element retainer illustrated in the drawings, the bracket or saddle member 44 is movable in a plane normal to the guide-posts 35 between an out-of-the-way position, permitting the insertion of tool elements in the rotary-hammer device 15 and the removal of the tool elements therefrom, and two tool element retaining positions.

In FIGS. 2, 3 and 4, the bracket 44 is shown in its first tool element retaining position in retaining engagement in a small diameter annular groove 52 of a tool element 53 which is mounted in the rotary-hammer device 15. The tool element 53, which is adapted for non-rotary hammer-like action, is provided with a rounded shank portion 54 which extends through the drive member 27 and into the cylinder 25 for impact engagement by the striker member 32. To insure non-rotation of the tool element 53 the portion extending through the nose member 28 is provided with an external hexagonal formation 55 for slidable interengagement with the internal hexagonal formation 30 of the non-rotatable nose member 28. The bracket 44 is in its lowermost position with the reduced-in-diameter head portions 40 of the guide-posts 35 fitted in the enlarged portions 50 of the elongated slots 49 formed in the ends of the bracket 44 whereby to retain the bracket 44 in its adjusted position. The radius of curvature of the closed end of the V-shaped slot 47 is approximately equal to the diameter of the necked portion of the tool element 53 defining the annular groove 52 whereby the end of the slot 47 is in embracing engagement with the necked portion 52 of the tool element 53.

In FIGS. 5, 6 and 7, the bracket 44 is shown in its second tool element retaining position in retaining engagement with a tool element 56 mounted in the rotary-hammer device 15 and having a necked shank portion defining a large diameter annular groove 57. The tool element 56, which is adapted for combined rotary and hammering action, includes a shank portion 58 which projects through the drive member 27 and into the cylinder 25 for impact engagement by the striker member 32. The shank portion 58 is provided with an external hexagonal formation 59 for slidable interengagement with the internal hexagonal formation 29 of the drive member 27 whereby the tool element 56 is in rotary driving engagement with the cylinder 25. In this second tool element retaining position of the bracket 44, the reduced-in-diameter head portions 40 of the guide-posts 35 are fitted in the enlarged portions 51 of the elongated slots 49 whereby to retain the bracket 44 in its second tool element retaining position. This second tool element retaining position of the bracket 44 corresponds to the large diameter annular groove 57 of the tool element 56 whereby only the wider outer edge portions of the generally V-shaped slot 47 are arranged in embracing engagement with the annular groove 57. Because of the variation in width of the sides of the generally V-shaped slot 47, the bracket 44 is adapted for retaining engagement with tool elements having annular grooves of various diameters.

In FIGS. 8, 9 and 10, the bracket 44 is shown in its uppermost or out-of-the-way position whereby to permit the insertion of tool element into the rotary-hammer device and their removal therefrom. In this position of the bracket 44, the shank portions of the guide-posts 35 intermediate the reduced-in-diameter head portions 40 and the abutment members 41 are disposed in the lower non-enlarged ends of the elongated slots 49 (FIG. 9) with

the reduced-in-diameter head portions 40 being disposed forwardly of the front surface of the bracket 44, as shown in FIG. 8.

Particularly because of the reciprocal, hammer-like action imparted to certain of the tool elements mounted in the rotary-hammer device 15 by the striker member 32, the guide-posts 35 and the bracket 44 carried thereon in retaining engagement with the tool elements are resiliently mounted on the nose end of the rotary-hammer device 15. A nut 62 is adjustably mounted on the threaded rear end 38 of each of the guide-posts 35. A coil spring 63 is disposed about the rear portion of each of the guide-posts 35 with each spring 63 seated between a pair of flanged bushings 64 which are slidably disposed on each guide-post 35 between the nut 62 and the rear surface of the enlarged nose portion of the tubular housing portion 18. The springs 63 tend to urge the guide-posts 35 in a rearward direction relative to the nose end of the rotary-hammer device 15. To complete the resilient mounting of the guide-posts 35 a coil spring 66 is disposed about the shank portion of each guide-post 35 forwardly of the nose member 28 with each spring 66 being seated between the front surface of the outwardly flanged portion of the nose member 28 and an abutment washer 67 disposed in abutting engagement against the rear end of the abutment member 41. The springs 66 tend to urge the guide-posts 35 in a forward direction. Preferably, both the springs 63 and the springs 66 are preset during fabrication thereof. Because of the greater impact shock to be absorbed by the rear coil springs 63 during hammer-like reciprocation of the tool elements, the springs 63 are preferably of greater strength than the forward coil springs 66.

With the guide-posts 35 resiliently mounted in the manner described, the bracket 44 is enabled to effectively retain the tool elements in the rotary-hammer device 15 despite the vigorous and powerful rotary-hammer action thereof and despite the sometimes considerable force required to withdraw the tool elements from the work. Off-setting the central portion of the bracket 44 forwardly of the end portions thereof serves to increase the rigidity of the bracket 44.

In order to adjust the bracket 44 in a direction normal to the guide-posts 35 between its various tool element retaining positions, it is necessary to bodily move the bracket 44 inwardly toward the nose end of the rotary-hammer device 15 sufficiently to disengage the reduced-in-diameter head portions 40 of the guide-posts 35 from the enlarged portions 50 or 51 of the elongated slots 49, after which the bracket 44 may be freely moved in a direction normal to the guide-posts 35. To provide means for resiliently latching the bracket 44 in its various tool element retaining positions, a coil spring 70 of relatively less strength than either the coil springs 63 or the coil springs 66 is disposed about the forward end portion of each of the guide-posts 35 and seated between the abutment washer 67 and a flanged bushing 71 which is slidably fitted over both the reduced-in-diameter head portion 40 and the enlarged diameter abutment member 41 of each guide-post 35. The springs 70 thus serve to urge the bracket 44 forwardly on the guide posts 35 whereby to resiliently retain the bracket 44 in any one of its tool element retaining positions or in its out-of-the-way position.

In operation, to move the bracket 44 from one of its tool element retaining positions to either its other tool element retaining position or its out-of-the-way position, the bracket 44 is manually depressed inwardly toward the nose of the rotary-hammer device 15 sufficiently to disengage the reduced-in-diameter head portions 40 of the guide-posts 35 from the enlarged portions 50 or 51 of the elongated slots 49 whereby the bracket 44 may be readily shifted in a direction normal to the guide-posts 35 into either its out-of-the-way position or into its other tool element retaining position. In order to facilitate manual adjustment or repositioning of the bracket 44, each end of the bracket 44 is provided with a readily grippable projection 75.

It will be understood that certain changes may be made in the construction or arrangement of the universal tool element retainer for a rotary-hammer device disclosed herein without departing from the spirit and scope of the invention as defined in the appended claims.

We claim:

1. A retainer for retaining tool elements in a rotary-hammer device comprising, a pair of guide-posts mounted on the nose end of the rotary-hammer device with said posts being located on opposite sides of the rotary axis of the device, a bracket member mounted on the forward ends of said guide-posts and being movable relative to both of said guide-posts in a direction normal thereto and in a straight path between operable and inoperable positions, and an open-ended slot formed in one edge of said bracket whereby said bracket in its operable position is adapted for embracing engagement in a necked portion of a tool element mounted in the device whereby to retain the tool element in the device during actuation thereof and during withdrawal of the tool element from the material being worked, said bracket when in its inoperable position permitting tool elements to be inserted into the nose end of the device and removed therefrom.

2. A retainer for retaining tool elements in a rotary-hammer device comprising, a pair of guide posts mounted on the nose end of the rotary-hammer device on opposite sides of the rotary axis thereof, a bracket mounted on the forward ends of said guide-posts, and a generally V-shaped slot formed in one edge of said bracket in alignment with the rotary axis of the device whereby said bracket is adapted to be embracingly received in an annular groove defined by a necked portion of the shank of a tool element mounted in the device for retaining the tool element in the device during actuation thereof, said bracket being movable relative to said posts in a direction normal thereto and toward the rotary axis of the device from an out-of-the-way position permitting insertion of a tool element into the nose end of the device into a series of tool element retaining positions corresponding to the diameter of the annular groove of the particular tool element mounted in the device, the varying width of said V-shaped slot accommodating tool elements having annular grooves of various diameters.

3. A retainer for retaining tool elements in a rotary-hammer device comprising, a pair of guide-posts mounted in the nose portion of the rotary-hammer device one on each side of the rotary axis thereof, each of said posts having an integral head on its forward end with said head having a rearwardly disposed reduced-in-diameter portion, abutment means on each guide-post spaced rearwardly of said reduced-in-diameter head portion, a bracket mounted on the forward ends of said guide-posts by means of elongated slots formed one in each end thereof whereby said bracket is movable in a direction normal to said guide-posts, a generally V-shaped slot formed in one edge of said bracket intermediate the ends thereof and in alignment with the rotary axis of the rotary-hammer device whereby said bracket is adapted to be embracingly received in an annular groove defined by a necked portion of the shank of a tool element mounted in the device to retain the tool element in the device during actuation thereof, said bracket being movable in said normal direction from an out-of-the-way position permitting insertion of a tool element into the nose portion of the device into any one of a series of tool-element-retaining positions corresponding to the diameter of the annular groove of the particular tool element mounted in the device, the varying width of said V-shaped slot accommodating tool elements having annular grooves of various diameters, each of said elongated mounting slots in the endsof said bracket having a series of spaced apart enlarged portions of a size to receive said reduced-in-diameter head portions of said guide-posts with the posi-

tions of said enlarged portions corresponding to said tool-element-retaining positions of said bracket, and a coil spring disposed about the forward portion of each guide-post and seated between said bracket and said abutment means whereby to resiliently retain said bracket in any one of its tool-element-retaining positions with the reduced-in-diameter head portions of said guide-posts received in the appropriate enlarged portions of said mounting slots, said bracket being movable between its out-of-the-way position and its series of tool-element-retaining positions by manually depressing the bracket against the action of said springs until said reduced-in-diameter head portions of said guide-posts are disengaged from said enlarged portions of said elongated mounting slots.

4. A retainer for retaining tool elements in a rotary-hammer device comprising, a pair of guide-posts slidably mounted in the nose end of the rotary-hammer device with said posts being located on opposite sides of the rotary axis of the device, a bracket member mounted on the forward ends of said guide-posts for movement relative to both of said guide-posts in a direction normal thereto and in a straight path between operable and inoperable positions, an open-ended slot formed in one edge of said bracket whereby said bracket in its operable position is adapted for embracing engagement in an annular groove formed in a tool element mounted in the device whereby to retain the tool element in the device during actuation thereof, said bracket when in its inoperable position permitting tool elements to be inserted into the nose end of the device and removed therefrom, first resilient means urging said guide-posts in a rearward direction, and second resilient means urging said guide-posts in a forward direction, said first and second resilient means permitting said retaining bracket to accommodate reciprocal, hammer-like action imparted to the tool element by the rotary-hammer device.

5. A retainer for retaining tool elements in a rotary-hammer device comprising, a pair of guide posts slidably mounted in the nose end of the rotary-hammer device on opposite sides of the rotary axis thereof, a bracket mounted on the forward ends of said guide-posts, a generally V-shaped slot formed in one edge of said bracket in alignment with the rotary axis of the device whereby said bracket is adapted to be embracingly received in an annular groove defined by a necked portion of the shank of a tool element mounted in the device for retaining the tool element in the device during actuation thereof, said bracket being movable relative to said posts in a direction normal thereto and toward the rotary axis of the device from an out-of-the-way position permiting insertion of a tool element into the nose end of the device into a series of tool element retaining positions corresponding to the diameter of the annular groove of the particular tool element mounted in the device, the varying width of said V-shaped slot accommodating tool elements having annular grooves of various diameters, first resilient means urging said guide-posts in a forward direction, and second resilient means urging said guide-posts in a rearward direction.

6. A tool element retainer as recited in claim 5 having resilient means for releasably retaining said bracket in each of said tool element retaining positions.

7. A retainer for retaining tool elements in a rotary-hammer device comprising, a pair of guide-posts slidably extending through a pair of bores formed in the nose portion of the rotary-hammer device one on each side of the rotary axis thereof, each of said posts having a nut adjustably threaded on its rear end and an integral head on its forward end with said head having a rearwardly disposed reduced-in-diameter portion, abutment means on each guide-post spaced rearwardly of said reduced-in-diameter head portion and forwardly of the nose portion of the rotary-hammer device, a first coil spring disposed about the rear portion of each guide-post and seated between said adjustable nut and the nose portion of the device whereby to urge said guide-posts in a rearward direction, a second relatively weaker coil spring disposed about the forward portion of each guide-post and seated between said abutment means and the nose portion of the device whereby to urge said guide-posts in a forward direction, a bracket member slidably mounted on the forward ends of said guide-posts for longitudinal slidable movement between said heads and said abutment means, said bracket being mounted on said guide-posts by means of elongated slots formed one in each end thereof whereby said bracket is also movable in a direction normal to said guide-posts, a generally V-shaped slot formed in one edge of said bracket intermediate the ends thereof and in alignment with the rotary axis of the rotary-hammer device whereby said bracket is adapted to be embracingly received in an annular groove defined by a reduced-in-diameter shank portion of a tool element mounted in the device to retain the tool element in the device during actuation thereof, said bracket being movable in said normal direction from an out-of-the-way position permitting insertion of a tool element into the nose portion of the device into any one of a series of tool-element-retaining positions corresponding to the diameter of the annular groove of the particular tool element mounted in the device, the varying width of said V-shaped slot accommodating tool elements having annular grooves of various diameters, each of said elongated mounting slots in the ends of said bracket having a series of spaced apart enlarged portions of a size to receive said reduced-in-diameter head portions of said guide-posts with the positions of said enlarged portions corresponding to said tool-element-retaining positions of said bracket, and a third coil spring disposed about the forward portion of each guide-post and seated between said bracket and said abutment means whereby to resiliently retain said bracket in any one of its tool-element-retaining positions with the reduced-in-diameter head portions of said guide-posts received in the appropriate enlarged portions of said mounting slots, said bracket being movable between its out-of-the-way position and its series of tool-element-retaining positions by manually depressing the bracket against the action of said third coil springs until said reduced-in-diameter head portions of said guide posts are disengaged from said enlarged portions of said elongated mounting slots.

8. A tool element retainer as recited in claim 7 wherein the portion of said bracket containing said generally V-shaped slot is offset forwardly of the ends of the bracket to increase the rigidity of said bracket and wherein the ends of said bracket are provided with manually grippable projections facilitating movement of said bracket between its various positions.

References Cited in the file of this patent

UNITED STATES PATENTS

1,164,560	Weiner	Dec. 14, 1915
1,295,439	Convenley	Feb. 25, 1919
1,472,496	Scheib	Oct. 30, 1923
1,675,432	Smith	July 3, 1928
1,684,177	Gartin	Sept. 11, 1928
1,831,818	McKenny	Nov. 17, 1931
1,969,798	Hultquist	Aug. 14, 1934
2,844,378	Whistler et al.	May 22, 1958

FOREIGN PATENTS

107,129	Austria	Aug. 25, 1927
316,933	Great Britain	May 8, 1930