Dec. 4, 1951 E. F. CONNELLY 2,577,310

VEHICLE SUPPORTED ROAD SANDER

Filed Sept. 13, 1946 4 Sheets-Sheet 1

FIG. 1

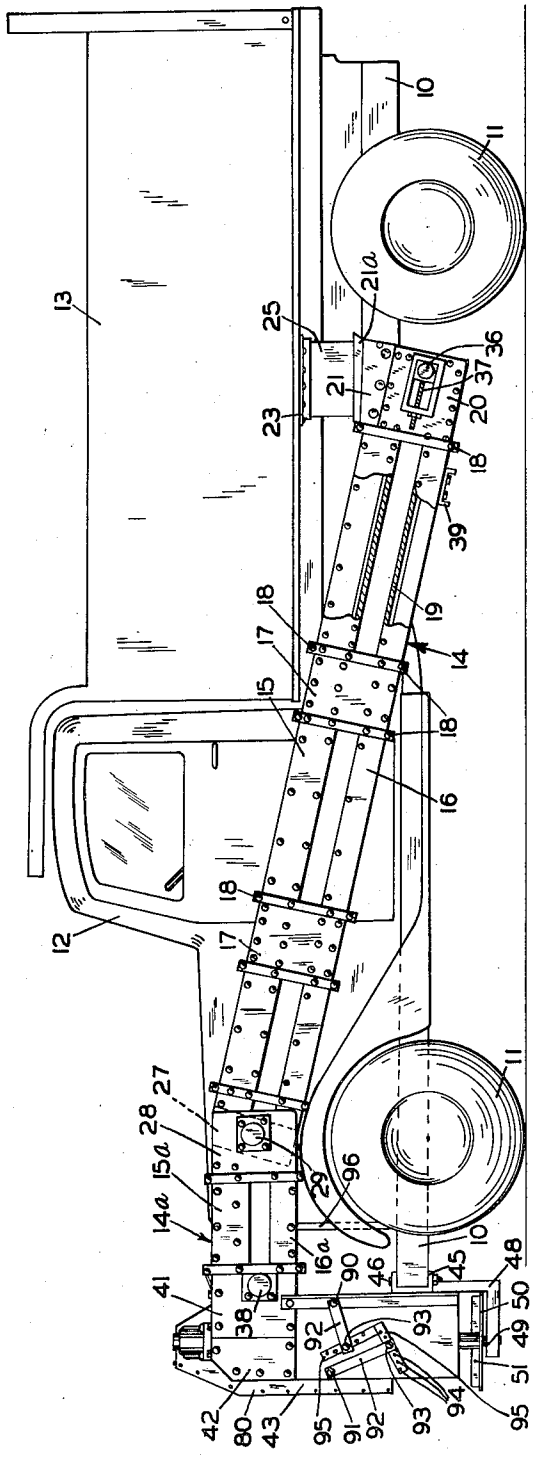

INVENTOR
EDWARD F. CONNELLY
BY Williamson & Williamson
ATTORNEYS

Dec. 4, 1951 E. F. CONNELLY 2,577,310

VEHICLE SUPPORTED ROAD SANDER

Filed Sept. 13, 1946 4 Sheets-Sheet 2

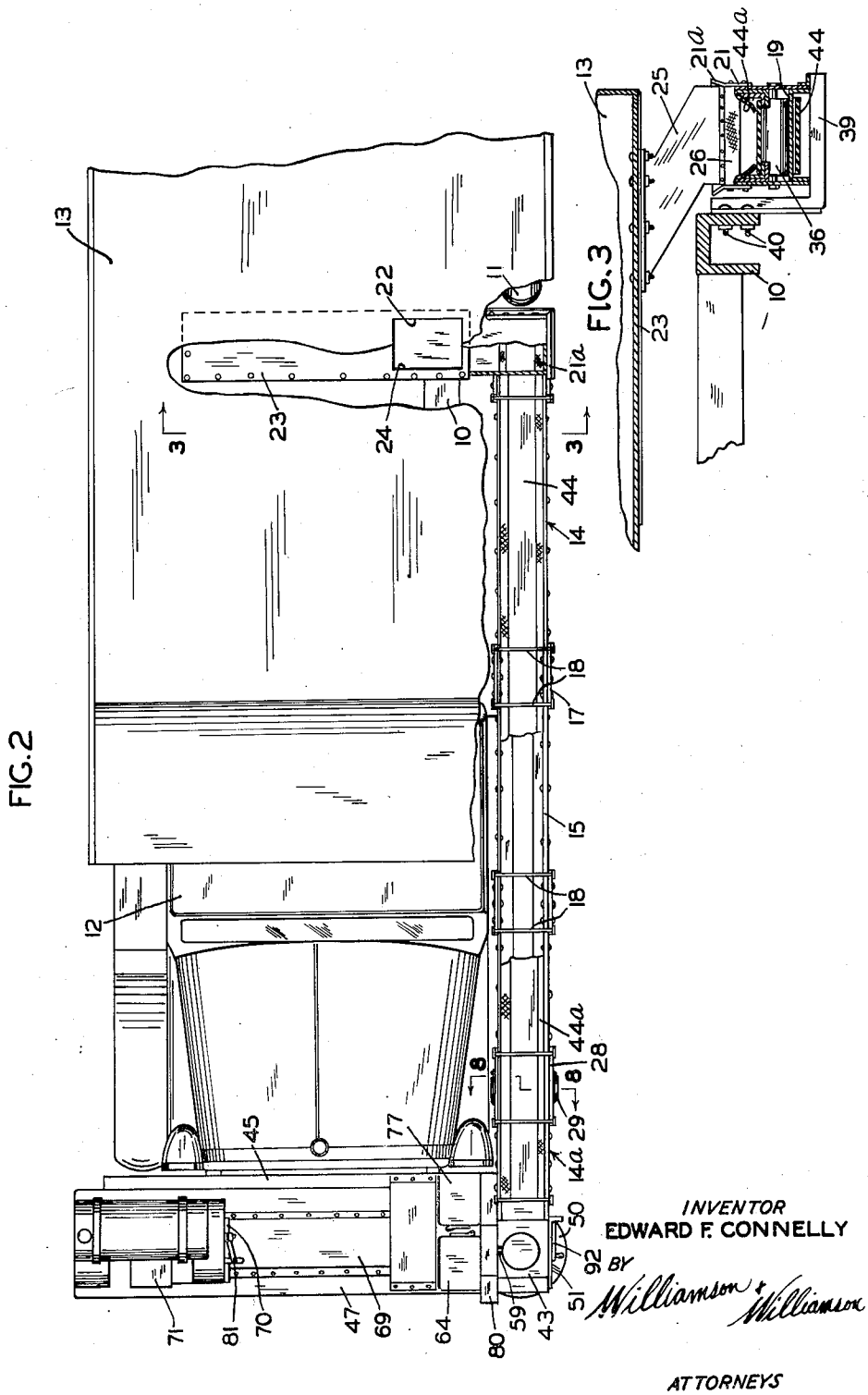

INVENTOR
EDWARD F. CONNELLY
BY
Williamson & Williamson
ATTORNEYS

Dec. 4, 1951 E. F. CONNELLY 2,577,310

VEHICLE SUPPORTED ROAD-SANDER

Filed Sept. 13, 1946 4 Sheets-Sheet 3

FIG. 4

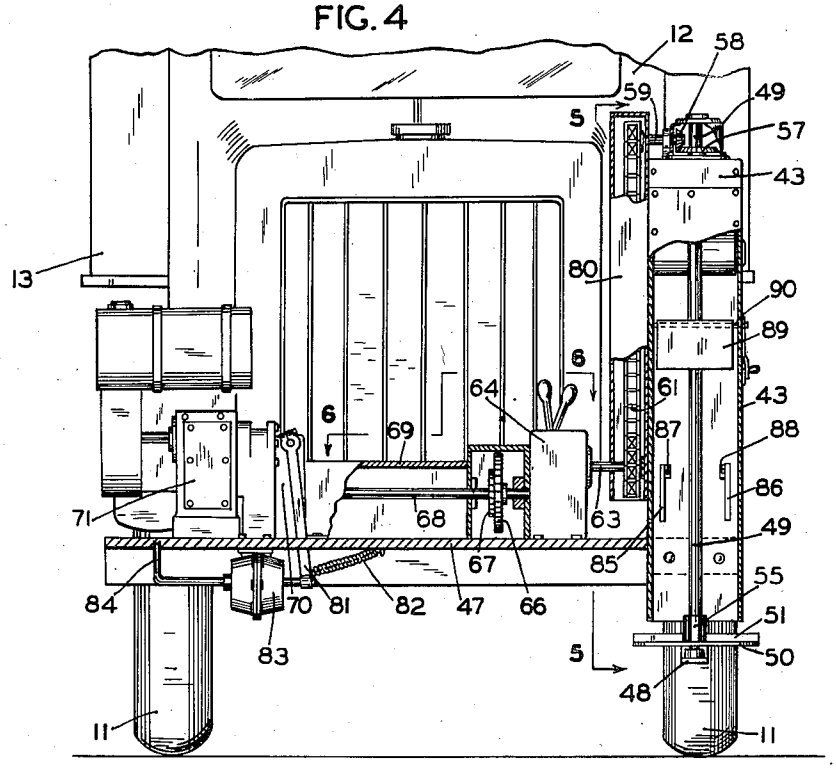

FIG. 5

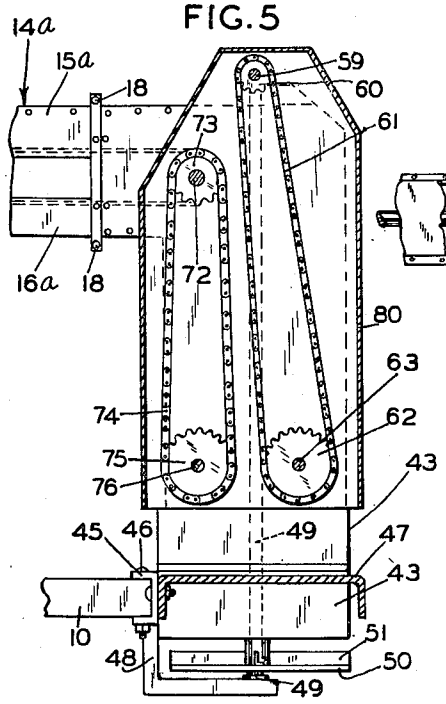

FIG. 6

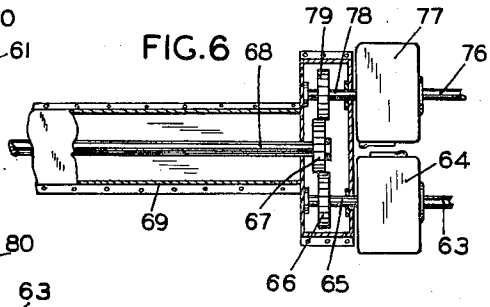

INVENTOR
EDWARD F. CONNELLY

BY Williamson & Williamson

ATTORNEYS

Dec. 4, 1951 E. F. CONNELLY 2,577,310

VEHICLE SUPPORTED ROAD SANDER

Filed Sept. 13, 1946 4 Sheets-Sheet 4

FIG.7

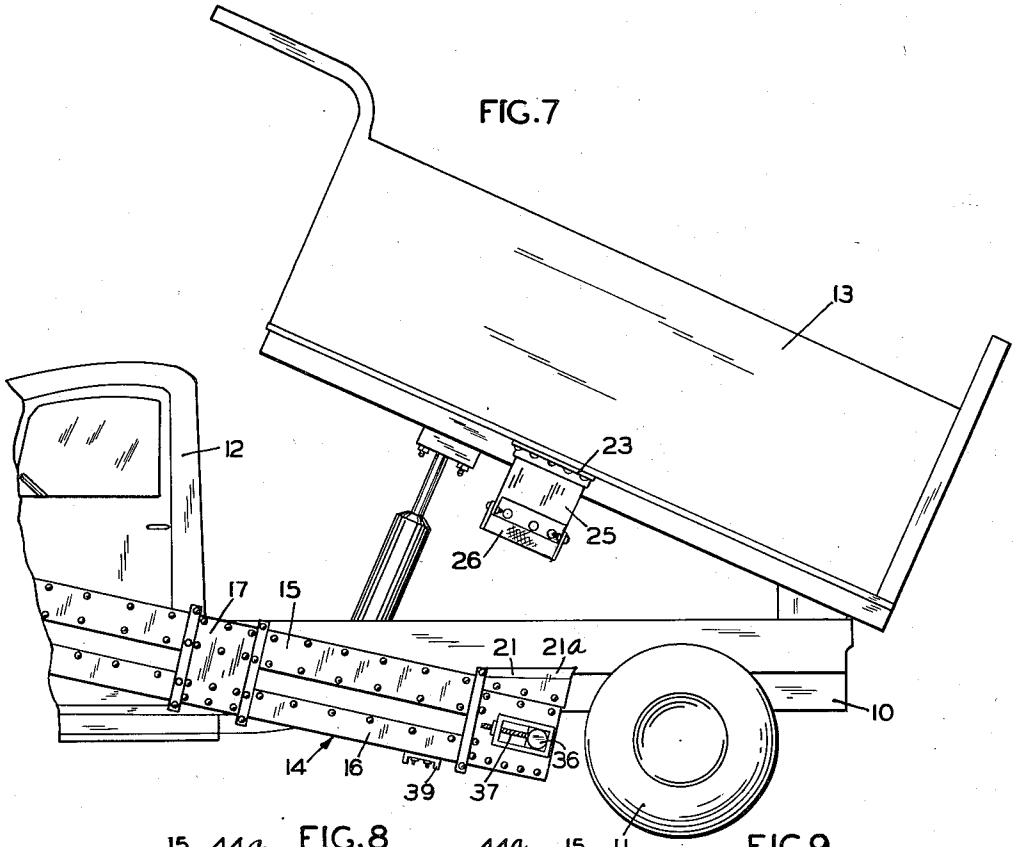

FIG.8

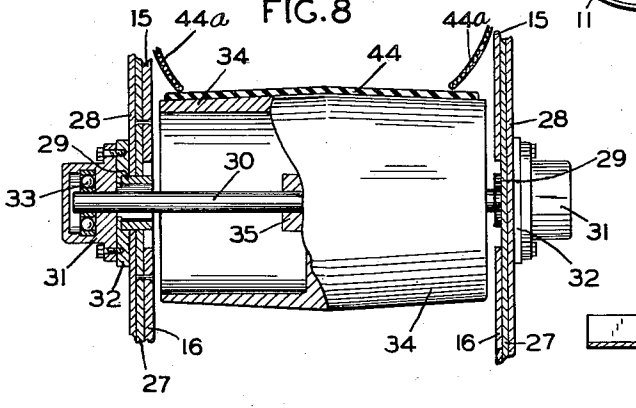

FIG.9

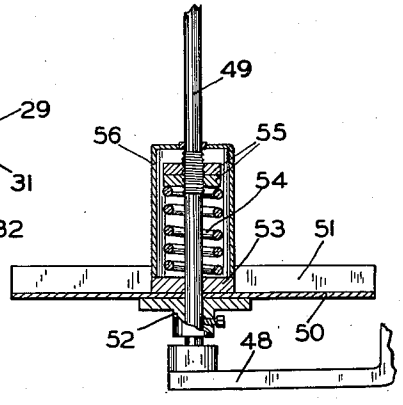

INVENTOR
EDWARD F. CONNELLY
BY Williamson & Williamson
ATTORNEYS

Patented Dec. 4, 1951 2,577,310

UNITED STATES PATENT OFFICE

2,577,310

VEHICLE SUPPORTED ROAD SANDER

Edward F. Connelly, St. Paul, Minn., assignor of one-half to Eva E. Stewart, St. Paul, Minn.

Application September 13, 1946, Serial No. 696,759

1 Claim. (Cl. 275—2)

1

This invention relates to apparatus for distributing materials such as sand, ashes, cinders or the like on slippery road surfaces and commonly known as road sanders.

It is an object of the invention to provide a road sander which is adapted to receive sand from the body of a truck and transport it forwardly to a distributor mounted on the front end of the truck, and wherein the power unit for operating the sand transporting conveyor and the distributor as well as the conveyor and distributor themselves are arranged in a readily attachable and detachable manner so that the truck is available for other purposes at times when the spreading of sand an slippery roadways is not required.

Another object of the invention is to provide a road sander including a distributor and conveyor leading from a point adjacent the under side of the truck body to the distributor wherein the sand flow connection between an outlet in the bottom of the truck body and the inlet of the conveyor is adaptable particularly for use with a dump body and wherein the flow connection in no way interferes with the pivotal movement of the dump body and at the same time provides for proper confinement of the sand as it flows from the dump body to the conveyor outlet.

Another object of the invention is to provide an improved distributor unit including a friction drive head and means for controlling it at will to determine the direction in which the sand is discharged from the distributor to meet varying conditions.

Still a further object of the invention is to provide a device as described above wherein the conveyor includes a trough and an endless belt, the trough being sectional and the sections being pivotally connected on a horizontal axis in such a way that the weight of the pivoted sections on the pivotal connection is not transmitted to the conveyor belt and its supporting rollers.

The above and other objects and advantages of the invention will more fully appear from the following description made in connection with the accompanying drawings, wherein like reference characters refer to the same parts throughout the views, and, in which:

Figure 1 is a side elevational view of a truck with my invention shown thereon, a portion of one of the conveyor sections being broken away;

Figure 2 is a top plan view of the forward and intermediate portions of a truck with the sanding apparatus thereon;

Figure 3 is an enlarged fragmentary sectional view taken approximately on the line 3—3 of Figure 2;

Figure 4 is a front elevational view with portions of the casing of the apparatus broken away to show interior structure;

2

Figure 5 is a section taken approximately on the line 5—5 of Figure 4;

Figure 6 is a section taken approximately on the line 6—6 of Figure 4;

Figure 7 is a partial side elevational view of the rear portion of the apparatus showing the separation of the sand flow connection from the truck body to the conveyor when the body is elevated;

Figure 8 is an enlarged sectional view taken approximately on the line 8—8 of Figure 2; and

Figure 9 is an enlarged fragmentary vertical sectional view through the distributor head and its friction drive connection.

In the drawings there is shown a truck chassis including side frame members 10 supported by wheels 11. The chassis also includes a driver's cab 12 and a tilting dump body 13, the details of the dumping mechanism being immaterial.

Lying alongside the chassis of the truck is a conveyor 14. The conveyor 14 includes side members 15 and 16 which are connected at intermediate points by side plates 17. The side plates 17 are connected by upper and lower spacer rods 18 to provide a trough-like casing which is provided with a suitable bottom plate 19 spanning the upper portions of the side members 16. The right-hand or rear end of the conveyor as viewed in Figure 1 is provided with connector plates 20 and spacer bars 18 as in the case of the side plate 17. An inlet or mouth 21 is provided at the rear end of the conveyor with a flared upper portion 21*a*, as best shown in Figure 3.

The truck body 13 is provided with a bottom discharge opening 22 shown in Figure 2. A transverse slidable plate 23 is suitably secured across the under side of the truck body 13 and said plate 23 provides a controllable opening 24 which permits sand to flow from the interior of the truck body down through the discharge spout 25 suitably secured to the under side of the truck body 13 and about the opening 22. The lower end of the discharge spout 25 is provided with a flexible and compressible fabric apron 26 shown in Figures 3 and 7, and in Figure 3 it will be seen that the lower end of the discharge spout 25 and its flexible and compressible apron 26 are removably receivable in the flared inlet portion at the rear end of the conveyor 14, there being no mechanical connection between the spout 25 and the conveyor inlet portion 21. Consequently, the dump body can be tilted as shown in Figure 7, and then dropped to its normal position and the discharge spout and conveyor inlet will assume the position of Figure 3 without any mechanical adjustment.

The slanting conveyor section 14 is pivotally connected to a generally horizontal forward conveyor section 14a. The connection is best shown in Figures 1 and 8. In Figure 8 there is shown a detail of the pivotal connection between the conveyor frame or trough members 14 and 14a. The upper portions of the side frame elements 15 and 16 of the conveyor section 14 are shown and they are connected by a cross plate 27 which is also indicated in dotted lines in Figure 1. The horizontal conveyor section 14a is provided with side plates 15a and 16a which are connected at their rear or right hand ends by a web 28 shown in Figure 8. The web 28 carries a bushing 29 which extends inwardly to provide a pivot bearing for the main slanting portion 14 of the conveyor frame structure, the main conveyor side elements 15 and 16 and their forward connector plate 27 being rotatable about said bearing 29.

It should be noted that the bearing 29 is in the form of a hollow cylinder. Extending through the cylindrical bearings at each side of the conveyor is a pulley or roller shaft 30. Each end of the shaft is secured in a bearing cap 31 which is bolted to a plate 32 welded or otherwise suitably secured to the web or plate 28 which connects the horizontal stationary conveyor side frame members 15a and 16a. It is preferred that ball bearing units 33 be provided in the caps 31 to reduce friction in the support of the shaft 30. A suitable pulley 34 has a central hub portion 35 which is mounted upon the shaft 30 for rotation therewith.

The pivotal connection between the two relatively movable conveyor frame portions 14 and 14a and the pivotal mounting of the pulley 34 are on the same axis, but it will be seen that the weight of the conveyor frame elements is in no way transmitted to the bearings for the pulley shaft 30 since they are entirely independently mounted.

A conveyor belt pulley unit is indicated generally at 36 at the rear or right hand portion of the pulley as indicated in Figure 1, and it may be provided with a tightener 37 such as is commonly known in the conveyor art. The details of the rear conveyor pulley mounting 36 and a similar pulley mounting 38 at the forward end of the conveyor are not shown since they are conventional.

The rear portion of the slanting conveyor assembly 14 is secured to the frame 10 of the truck by means of a bracket 39 which is shown to extend beneath the rearward portion of the conveyor unit 14 and thence upwardly to be secured by suitable means such as nutted bolts 40 which extend through one of the webs of the truck frame, as best indicated in Figure 3.

The forward portion of the stationary generally horizontal conveyor section 14a has an end portion 41 which connects the upper and lower conveyor frame elements 15a and 16a and is in turn connected to a plate 42 forming a part of the top of a distributor feed casing 43. The conveyor includes an endless belt 44 whose left-hand or forward end as viewed in Figure 1 extends to or partially into the upper end of the distributor feed casing 43. Secured to the inner sides of the stationary conveyor frame or trough sections are side flaps 44a which are shown in Figures 2, 3 and 8. As best shown in Figures 3 and 8, the flaps 44a extend downwardly and somewhat inwardly into contact with the conveyor belt and to a great extent prevent sand from working off the sides of the belt.

The subframe, which is part of the apparatus which can be attached to and removed from the truck, includes a relatively narrow channel iron 45 which is connected across the front ends of the truck frame members 10 and secured thereto by any suitable means such as nutted bolts 46. The remainder of the subframe includes a relatively broad channel member 47 whose webs extend downwardly as shown in Figure 5. Secured to the subframe channel 45 adjacent one end thereof is an L-shaped bracket 48 whose horizontal portion extends forwardly and rotatably supports a shaft 49 which extends vertically throughout substantially the entire length of the vertically disposed distributor feed casing 43. Mounted on the lower end of the distributor shaft 49 is a horizontal disc 50 having vertically disposed radial blades 51. In Figure 9 a detail of this particular structure is shown. A flanged collar 52 is mounted on the shaft 49 below the disc 50 and a friction disc 53 is loosely mounted on the shaft 49 on the upper side of the distributor disc 50 and the inner ends of the distributor blades 51. A compression spring 54 is located on the shaft 49 between the friction disc 53 and a pair of adjustable lock nuts 55. It is preferred that a suitable protective cap 56 be placed over the spring element and lock nuts 55 so that they will be protected from sand or other suitable materials which pass through the distributor.

The upper end of the distributor drive shaft 49 is provided with a bevel gear 57 which in turn meshes with a bevel gear 58 on a stub shaft 59 which is suitably supported by the upper portion of the distributor feed casing 43. There is a sprocket 60 on said stub shaft 59 over which a chain 61 runs. Said chain 61 also extends about a sprocket 62 on a power shaft 63 shown in Figures 4, 5 and 6. The shaft 63 is connected with a speed changing transmission unit 64 which may be of any suitable type, it being understood that said transmission has a neutral or idling position. As shown in Figure 6, a shaft 65 extends from the other side of the transmission and carries a pinion 66 which is in mesh with and driven by a pinion 67 on the main power shaft 63. The shaft 68 extends lengthwise of the subframe channel 47 through a suitable housing 69 to a clutch unit 70 indicated in Figure 4, and said clutch unit is in turn connected to a power unit such as an internal combustion engine 71.

In Figure 5 at the forward end of the generally horizontal conveyor section 14a is a horizontal shaft 72 which also serves as the forward conveyor roller shaft whose mounting is indicated at 38 in Figure 1. The shaft 72 has a sprocket 73 thereon which is connected by a chain 74 to a sprocket 75 on a lower shaft 76 which is parallel to and approximately the same level as the shaft 63 mentioned above. The shaft 76 leads to a second chain speed mechanism 77 having a shaft 78 with a pinion 79 which also meshes with the main drive pinion 67 in the manner of the pinion 66 which is in the spreader drive assembly.

The shafts 59, 63, 73 and 76 extend laterally outwardly through the upper portion of the distributor feed casing 43 into a casing 80 within which the four sprockets shown in Figure 5 and the chains 61 and 74 are located.

The clutch 70 connected to and maintained against the internal combustion engine 71 is provided with a throw-out lever 81 shown in Figure 4. Said lever 81 is normally pulled to the right as viewed in Figure 4 by a spring 82 which

is connected between the lower end of the lever and the underside of the main subframe channel 47. The clutch lever 81 is also connected to a diaphragm unit 83 which may be pneumatically or hydraulically actuated. The diaphragm unit 83 is connected by a conduit 84 to a suitable pressure device which may be conveniently controlled from the cab of the truck.

The distributor feed casing 43 as shown in Figure 4 is provided with a pair of pivoted baffles 85 and 86 mounted on pivots 87 and 88 whose axes are longitudinally of the truck and the conveyor. One of a similar pair of baffles is shown above the baffles 85 and 86 at 89. It is mounted on a pivot 90 which is at right angles to the pivotal axes of the baffles 85 and 86. In Figure 1 the baffle pivot 90 is shown and its cooperating baffle on a parallel axis has its pivot indicated at 91. The pivots 90 and 91 have operating levers 92 connected thereto and their ends are provided with small pins 93 which are adapted to selectively be placed in detents 94 formed in plates 95 which are mounted on the distributor feed casing 43. The baffles 85 and 86 are provided with similar means for adjustably retaining them in different angular positions, and it should be noted that all four of the baffles are independently operable.

By setting the four baffles just above it is possible to direct the flow of sand received from the conveyor belt 44 to different points about the vertical pivotal axis of the spreader head made up of the disc 50 and radial upstanding blades 51. If the baffles are dropped to a vertical position such as that illustrated in connection with the baffles 85 and 86 in Figure 4, the sand will fall downwardly through the feed casing 43 in a substantially uniform manner and all parts of the distributor head will receive equal amounts of sand. This, of course, will result in the sand being distributed equally in all directions from the vertical axis of rotation of the distributor disc. If by adjustment of the baffles more sand is caused to fall approximately on the left hand side of the distributor disc the sand will be deflected diagonally forwardly and to the left. If the sand is deposited principally on the forward portion of the distributor disc the sand will be distributed diagonally to the right and forwardly, etc. Consequently, a very accurate spreading range and direction can be secured by proper adjustment of the baffles in the distributor feed chute, and, of course, by controlling the speed of the distributor disc by means of its change speed gearing in the transmission 6A.

The entire apparatus can be readily mounted upon and removed from a truck of ordinary construction. With the conventional truck models the front bumper is removed and the cross frame which extends between the front ends of the truck frame member 10 can be quickly bolted on and the bracket 39 which supports the rear end of the conveyor section 14 can also be easily connected to the rearwardly intermediate portions of the truck frame side members 10. As brought out above, the conveyor inlet 21 and discharge spout 25 are arranged so that the apparatus can be used with a dump truck and the dump body can be tilted as shown in Figure 7 without disconnecting any parts while at the same time sand can be fed from the dump body to the conveyor when the body is in the position of Figure 1 without any leakage in the connection between the dump body and the conveyor.

I have provided a compact form of pivotal connection for the two conveyor sections in combination with a pivotal pulley support on the same axis as said pivotal conveyor section wherein the weight of the conveyor is entirely removed from the pulley bearing.

The power mechanism, clutch, dual transmission, distributor head and feed as well as the forward portion of the conveyor assembly are supported principally by the subframe made up of the channels 45 and 47 although there may be an auxiliary support 96, as shown in Figure 4, to support the forward horizontal section of the conveyor assembly. The support 96 extends from the conveyor section 14a to the forward portion of the truck side frame member 10.

The distributor head per se made up of the disc 50 and radial blades 51 has a friction drive connection shown in Figure 9 which will prevent breakage in the event of clogging of the distributor head, and furthermore when the unit is shut off if the distributor head is rotating rapidly it will permit some slippage until the apparatus has come to rest.

Another important feature of the invention is the baffle arrangement in the distributor casing 43 which, as stated above, permits rather precise directional control of the material being spread on the road surface.

It will, of course, be understood that various changes may be made in the form, details, arrangement and proportions of the various parts without departing from the scope of my invention.

What I claim is:

In a road sander for use on a truck having a chassis with a tilting dump body thereon, a conveyor having means for connecting it to said chassis and having an upwardly open inlet end portion, said conveyor inlet being defined by a flared mouth portion, a material discharge spout having means for connecting the same to the lower portion of said dump body, said spout being adjacent to and surrounding a discharge opening in said lower portion of said dump body, said discharge opening being controlled by a slidable plate, a depending flexible and compressible lower skirt portion having means for securing it to the bottom of said material discharge spout, said spout and said skirt portion being unattached to said conveyor but aligned with the flared mouth portion thereof when said dump body is in the normal or horizontal position, and said flexible and compressible skirt of the spout freely telescoping within said flared mouth portion but automatically separated therefrom when said body is tilted in a dumping position.

EDWARD F. CONNELLY.

REFERENCES CITED

The following references are of record in the file of this patent:

UNITED STATES PATENTS

Number	Name	Date
1,231,269	Kindling	June 26, 1917
1,305,500	Steele	June 3, 1919
1,623,001	Gollbach	Mar. 29, 1927
1,880,155	Ruth	Sept. 27, 1932
1,924,825	Young	Aug. 29, 1933
2,162,689	Mayfield	June 20, 1939
2,190,863	Dance	Feb. 20, 1940
2,224,789	Kurtz et al.	Dec. 10, 1940
2,256,655	Stewart	Sept. 23, 1941
2,323,262	Warren	June 29, 1943
2,368,470	Hopkins	Jan. 30, 1945