United States Patent [19]

Paioletti

[11] **3,899,201**

[45] **Aug. 12, 1975**

[54] **LOCK-STRUCTURES**

[76] Inventor: **Jose Paioletti,** Rua Alagoas No. 270-8° andar, Sao Paulo, Brazil

[22] Filed: **Dec. 10, 1973**

[21] Appl. No.: **423,520**

[52] **U.S. Cl.** **292/25;** 70/100; 70/123; 292/106; 292/337

[51] **Int. Cl.** **E05b 65/08**

[58] **Field of Search** 70/100, 123, 137, 139, 70/448; 292/25, 96, 106, 337

[56] **References Cited**

UNITED STATES PATENTS

1,204,781	11/1916	Kaufman	70/121
2,224,671	12/1940	Crooks	70/151
3,103,804	9/1963	Wood et al.	70/139

Primary Examiner—Albert G. Craig, Jr.
Attorney, Agent, or Firm—Michael S. Striker

[57] **ABSTRACT**

A door lock in which a pair of hook-shaped locking members are pivotally mounted between spaced sidewalls of a casing movable between a retracted and an outwardly projecting locking position. The locking members are movable between the positions thereof by a slide block arranged between the sidewalls of the casing movable toward and away the front edges of the sidewalls and linked to the locking members. The slide block is movable by engagement with a radial projection provided on a known key operated cylinder. The lock includes further a spring biased latch element movably arranged on the slide block between a latching and a releasing position and moved by the projection on the cylinder to the releasing position prior to engagement of the slide block by the radial projection.

5 Claims, 3 Drawing Figures

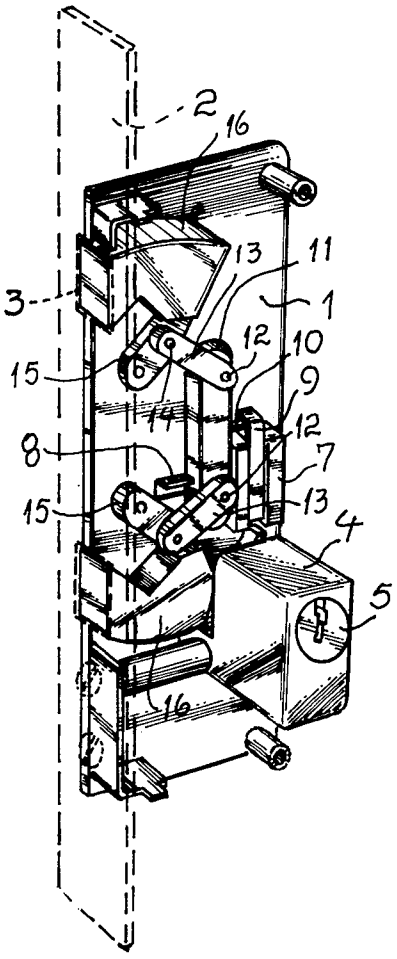

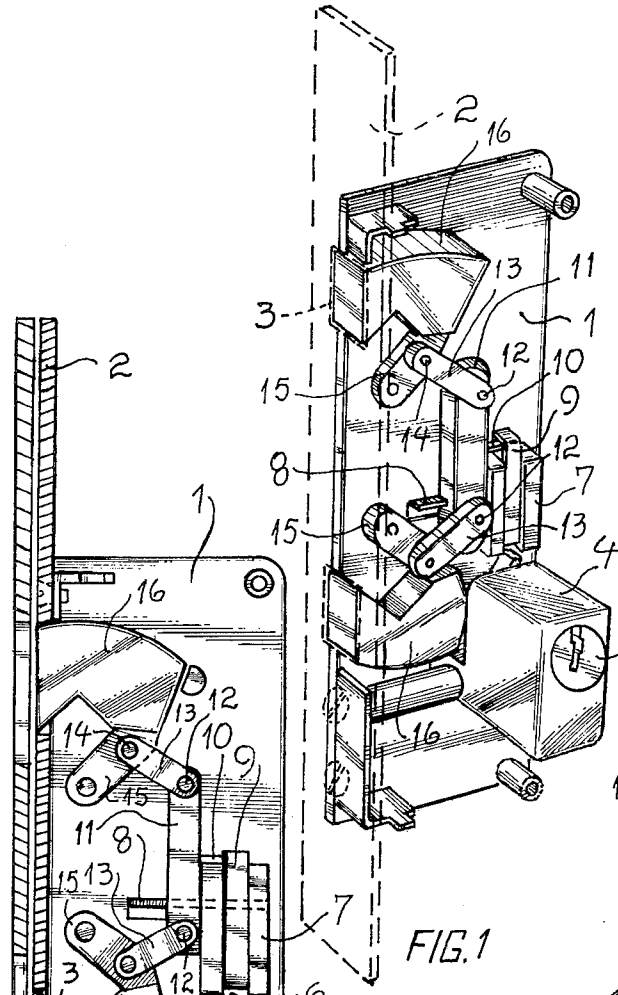

FIG. 1

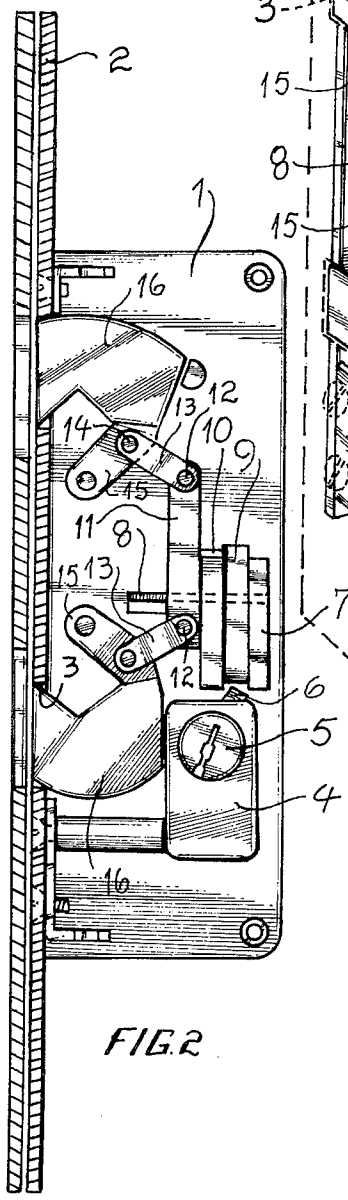

FIG. 2

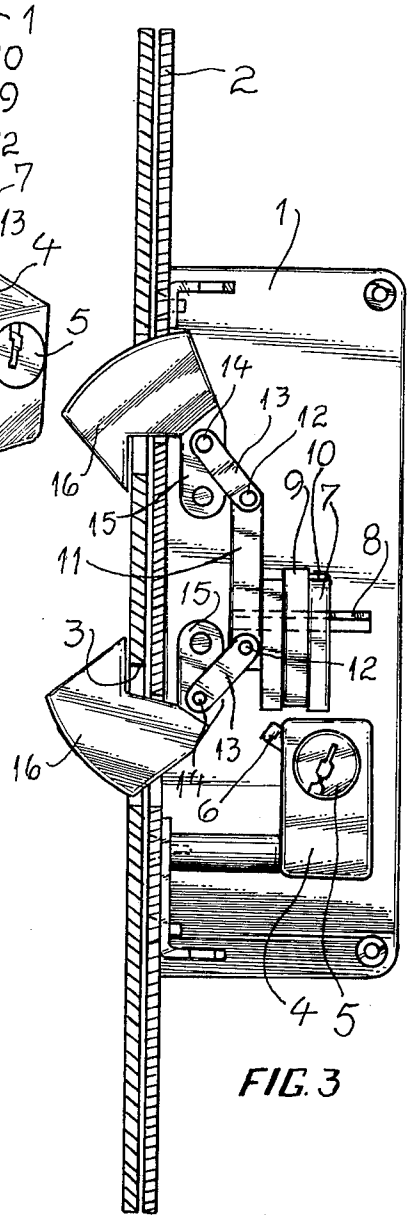

FIG. 3

LOCK-STRUCTURES

BACKGROUND OF THE INVENTION:

The present invention relates to a door lock in which a pair of hook-shaped locking members are pivotally mounted between spaced sidewalls of a casing movable between a retracted and an outwardly projecting locking position, and in which the locking members are movable by radial projections provided in known key operated cylinders and elements between this projection and the locking members arranged to move the locking members from a retracted to a locking position upon turning of the cylinders in one direction and from the locking position back to the retracted position during turning of the cylinder in the opposite direction. The lock includes further a spring biased latching means likewise cooperating with the aforementioned projection on the key operated cylinder for preventing the locking members to move from one to the other position thereof until the latching means are moved to a releasing position.

SUMMARY OF THE INVENTION

It is an object of the present invention to provide for a lock of the aforementioned kind which is composed of relatively few and simple parts so that the lock may be produced at very reasonable cost and stand up perfectly under extended use.

It is a further object of the present invention to provide especially latch means of simple construction.

With these and other objects in view, which will become apparent as the description proceeds, the door lock according to the present invention mainly comprises a casing having a pair of spaced substantially parallel sidewalls between which a pair of hook-shaped locking members are pivotally mounted for movement between a retracted position within the casing and a locking position in which the locking members project with portions thereof beyond longitudinal front edges of the sidewalls. Means are also provided for moving the locking members between the positions thereof and these means include a slide block means guided by guide means for movement toward and away from the front edges of the sidewalls, and a pair of links pivotally connected to the slide block means and the locking members. The slide block means are provided with a slot extending substantially parallel to the front edges of the side plates in which a spring biased elongated latch bar is movably guided between a latching and a releasing position. The elongated latch bar has opposite inwardly extending ends, and a single projection protruding from one of the sidewalls is arranged to laterally engage one side of one of the inwardly extending ends of the bar when the latter is in the latching position thereof to prevent the slide blocking means to move toward the longitudinal edges of the sidewalls and to prevent thereby movement of the locking members from the retracted to the locking position. Rotatable cylinder means are mounted in the casing and having a radially extending projection arranged to engage upon rotation of the cylinder means in one direction first the other of the inwardly turned ends of the latching bar to move the latter against the spring bias to the releasing position in which said one inwardly turned end is moved out of lateral engagement with the aforementioned projection on the sidewall and to subsequently engage the thus freed slide block means to move the latter laterally towards the longitudinal edges of the sidewalls and the locking members from the retracted to the locking position. The spring biased latching means move back to its locking position after the slide block means has moved laterally so that the one inwardly turned end thereof engages the projection on the sidewall on the other side of the latter to thus prevent movement of the slide block means in a direction away from said longitudinal edges to thus hold the locking members in the locking position.

The novel features which are considered as characteristic for the invention are set forth in particular in the appended claims. The invention itself, however, both as to its construction and its method of operation, together with additional objects and advantages thereof, will be best understood from the following description of specific embodiments when read in connection with the accompanying drawings.

BRIEF DESCRIPTION OF THE DRAWING:

FIG. 1 is a perspective view of the lock according to the present invention with one of the sidewalls of the casing removed and showing the locking members in the retracted position;

FIG. 2 is a side view of the lock shown in FIG. 1 with the locking members shown likewise in the retracted position; and

FIG. 3 is a side view of the lock showing the locking members in the locking position.

DESCRIPTION OF THE PREFERRED EMBODIMENTS:

Referring now to the drawing, it will be seen that the lock according to the present invention comprises a casing having a pair of substantially parallel spaced sidewalls **1** and an end wall **2** extending transverse to the sidewalls along one of the longitudinal edges thereof and fixedly connected thereto in any convenient manner. The end wall **2** is provided with two vertically spaced openings **3**. A pair of hook-shaped locking members **16** are pivotally mounted at the inner ends thereof on pivot pins **15** extending between the sidewalls **1** for movement between a retracted position as shown in FIG. **2**, in which the locking members **16** are completely within the sidewalls of the casing and a locking position shown in FIG. **3** in which the hook-shaped ends of the locking members **16** project through the openings **3**. A pair of links **13** are respectively pivotally connected at one of the ends thereof by a pin **14** to the locking members **16** and at the other ends by pins **12** to an elongated member **11** integral with a U-shaped slide block **7** and forming therewith slide block means. Cooperating guide means are provided for guiding the slide block means **7, 11** movable toward and away from the front edges of the sidewalls **1**. These cooperating guide means preferably comprise a guide bar **8** bent out from one of the sidewalls **1** substantially normal thereto and normal to the aforementioned front edges of the sidewalls and the guide rail **8** extends into a slot formed in the slide block means **7, 11** to guide the latter toward and away from the front edges of the side plates **1**. The slide block **7** is further provided with an elongated slot extending substantially parallel to the aforementioned front edges of the sidewalls **1** in which an elongated locking bar **9** is slidably guided between a latching and a releasing position. The elongated latching bar **9** has inwardly bent opposite ends and is

spring biased, by a spring not shown in the drawing, in such a manner that its upper inwardly bent end abuts laterally against a projection **10** protruding from one of the sidewalls substantially normal thereto and preferably struck out from this sidewall. In the position shown in FIG. **1**, the projection **10** is located to the left, as viewed in this Figure, of the upper inwardly bent end of the member **9** and prevents thereby the slide block means **7, 11** to move toward the left, as viewed in FIG. **2**.

Lock cylinders **5** of known construction, to be operated by keys, extend through openings in the sidewalls **1** and are fixed thereto in any known manner. Each of the locking cylinders is provided with a radially projecting portion **6** arranged, upon rotating of the respective cylinder **5** by a key, to engage first the lower inwardly bent end of the member **9** to move the latter against the bias of its spring upwardly to a releasing position and to subsequently engage the slide block **7** at one of the faces defining the slot in which the member **9** is arranged to move the slide block **7** toward the right or the left depending on the direction of turning the projecting portion **6**.

The operation of the lock according to the present invention will be obvious from the above description thereof.

When the locking members **16** are in the retracted position as shown in FIG. **2**, the slide block means **7, 11** are in their rightmost end position, as shown in FIG. **2** and the projection **10** is to the left of the inwardly turned upper end of the latch bar **9**, preventing thereby the slide block means **7, 11** to move toward the left, as viewed in FIG. **2** to thereby hold the locking member **16** in the retracted position. If the cylinder **5** is now turned by means of a key in counterclockwise direction, the radial projection **6** thereon will first engage the lower inwardly turned end of the latch bar **9** to move the latter against the bias of its spring in upward direction so that the upper inwardly turned end of the latch bar **9** will move out of lateral engagement with the projection **10** so that during further turning of the projection **6**, the latter will engage the slide block **7** and move the latter towards the left, as viewed in FIG. **2** so that the locking members **16**, connected by the links **13** to the slide block means **7, 11** are turned about their pivot pins and moved to the locking position shown in FIG. **3**. During this movement of the slide block means **7, 11** towards the left, the upper inwardly turned end of the latching bar **9** will ride over the projection **10**, and in the leftmost position of the slide block means, as shown in FIG. **3**, the upper inwardly turned end of the latching bar **9** will be located to the left side of the projection **10**, as viewed in FIG. **3** so that the latching bar will be moved by the bias of a spring cooperating therewith back to its latching position in which the inwardly turned upper end of the latching bar **9** will engage with its right side face the corresponding side face of the projection **10** to thereby prevent movement of the slide block means **7, 11** towards the right, as viewed in FIG. **3** to thus prevent also the locking members **16** to move from the locking to the retracted position.

Evidently, upon turning of the cylinder **5** and the radial projection **6** thereon in clockwise direction from the position shown in FIG. **3**, the latching bar **9** will first be moved to its releasing position and subsequently thereto the slide block means **7, 11** will be moved towards the right, as viewed in FIG. **3** to its rightmost end position as shown in FIG. **2** so that the locking members **16** are again moved back to their retracted position as shown in FIG. **2**.

It will be understood that each of the elements described above, or two or more together, may also find a useful application in other types of door locks differing from the types described above.

While the invention has been illustrated and described as embodied in a door lock with pivotable locking members movable between a retracted and a locking position and latch means for holding the locking members in either position, it is not intended to be limited to the details shown, since various modifications and structural changes may be made without departing in any way from the spirit of the present invention.

Without further analysis, the foregoing will so fully reveal the gist of the present invention that others can by applying current knowledge readily adapt it for various applications without omitting features that from the standpoint of prior art fairly constitute essential characteristics of the generic or specific aspects of this invention.

What is claimed as new and desired to be protected by Letters Patent is set forth in the appended claims:

1. A door lock comprising a casing having a pair of spaced substantially parallel sidewalls having longitudinal front edges; a pair of hook-shaped locking members each pivotally mounted in the region of one end thereof on said sidewalls for movement between a retracted position within said casing and a locking position in which said locking members project with portions thereof beyond said longitudinal front edges; means for moving said locking members between the positions thereof and including slide block means and a pair of links pivotally connected to said slide block means and said locking members, said slide block means being provided with a slot extending substantially parallel to said front edges of said sidewalls; cooperating guide means on said slide block means and one of said sidewalls for guiding said slide block means movable toward and away from said front edges; spring biased latch means comprising an elongated latching bar movably guided in said slot between a latching and a releasing position, said latching bar having inwardly extending opposite ends substantially normal to the portion of the bar which is guided in said slot; a single projection protruding from one of said sidewalls arranged to laterally engage one side of one of said inwardly extending ends of said bar when the latter is in said latching position, to prevent said slide block to move toward said longitudinal edges and movement of said locking members from said retracted to said locking position; and rotatable cylinder means mounted in said casing and having a radially extending projection arranged to engage upon rotation of said cylinder means in one direction first the other of said inwardly turned ends of the locking bar to move the latter against the spring bias to said releasing position in which said one inwardly turned end is moved out of lateral engagement with said projection on said sidewall and to subsequently engage the thus freed slide block means to move the latter laterally towards said longitudinal edges and the locking members from said retracted to said locking position, said spring biased means moving back to its latching position after said slide block means has moved laterally so that said one inwardly turned end of said latching bar engages said projection on the sidewall on the other side of the

latter to prevent movement of said slide block means in a direction away from said longitudinal edges to thus hold said locking members in said locking position.

2. A lock as defined in claim **1**, wherein said guide means comprise a guide rail struck out from one of said sidewalls and extending substantially normal to the latter and normal to said longitudinal front edges.

3. A lock as defined in claim **1**, wherein said projection on said one sidewall is struck out from the latter substantially normal thereto.

4. A lock as defined in claim **1**, and including a front wall secured to said longitudinal front edges of said sidewalls and provided with a pair of openings through which portions of said hook-shaped locking members project in the locking position of the latter.

5. A lock as defined in claim **1**, wherein said cylinder means comprise a pair of cylinders respectively projecting with portions thereof beyond said sidewalls and each provided with said radial projection.

* * * * *