May 30, 1950 W. A. SISSON 2,509,279

PROCESS AND APPARATUS FOR TREATMENT OF FILAMENTARY MATERIALS

Filed Dec. 22, 1944

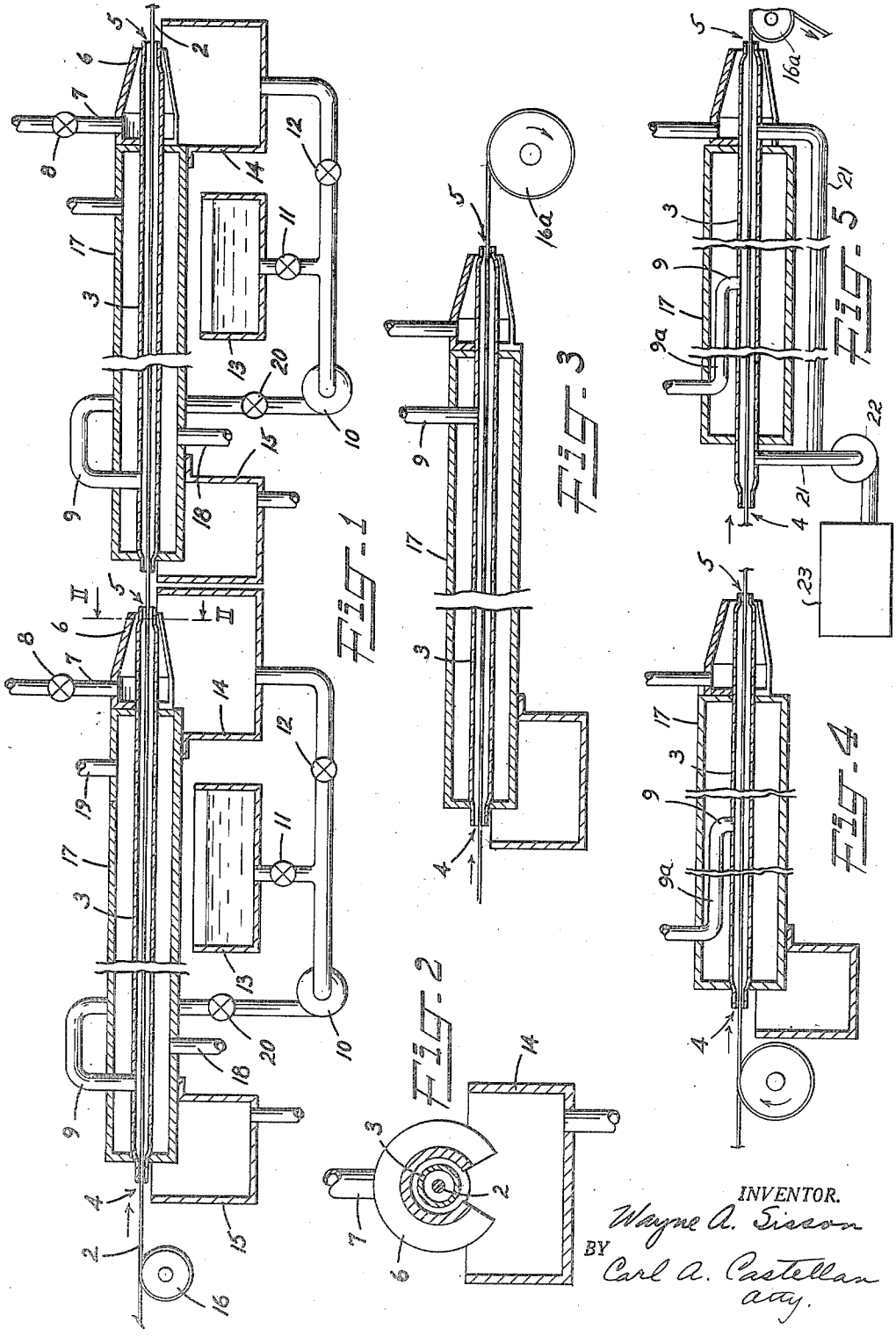

FIG. 1

FIG. 3

FIG. 5

FIG. 2

FIG. 4

INVENTOR.
Wayne A. Sisson
BY Carl A. Castellan
atty.

Patented May 30, 1950

2,509,279

UNITED STATES PATENT OFFICE

2,509,279

PROCESS AND APPARATUS FOR TREATMENT OF FILAMENTARY MATERIALS

Wayne A. Sisson, Silverside, Del., assignor to American Viscose Corporation, Wilmington, Del., a corporation of Delaware

Application December 22, 1944, Serial No. 569,339

9 Claims. (Cl. 117—7)

1

This invention relates to the treatment of filamentary materials with fluids, such as liquids and gases, and it is particularly concerned with the processing of continuous filamentary material, such as yarns whether made of artificial or natural fibers or filaments, or continuous bundles of continuous filaments obtained by the extrusion of plastic masses through spinnerets into coagulating medium.

In accordance with the present invention, the continuous strand of filamentary material is passed in succession through a plurality of fluid-treating stages. In each treatment stage, the material is directed through a substantially straight passage through a tube which is supplied with the treating fluid and confines the treating fluid to the vicinity of the path of material through the tube. The fluid is preferably introduced in such a manner as to serve partially as a conveying means for drawing the filamentary material through the treating device under controlled tension. Alternatively, however, the fluid stream may be so controlled as to oppose the passage of the material through the treatment stage and thereby to tension the material in advance of a subsequent treatment or collecting stage. Among the features of the invention is the controlling of the fluid-treatment in such a manner as to remove excess liquid adhering to the strand in advance of its entrance into a particular treatment stage, the utilization of a certain amount of the treatment fluid of that stage for accomplishing such excess removal, and the segregation of the fluid discharged for the purpose of removing the excess from the fluid that is discharged after being used for the main treatment in the particular stage.

One of the particular objects of the invention is to provide for a novel arrangement and process for the continuous spinning of artificial filaments. Another object is to provide an improved method of drying continuous filamentary material and particularly for the drying of artificial material that has been freshly spun and wet-processed, especially that produced from viscose and cuprammonium cellulose. Other objects and advantages of the present invention will be apparent from the drawing and the description thereof hereinafter.

In the drawing, which is illustrative of the invention,

Figure 1 is a side elevation showing two stages of a continuous processing arrangement,

Figure 2 is a section taken on line II—II of Figure 1,

2

Figure 3 is a view showing a modification of a fluid-treatment stage,

Figure 4 shows a further modification of a single treatment stage, and

Figure 5 shows still another modification of a single treatment stage.

As shown in Figure 1, the strand 2 passes in succession through a plurality of treatment stages, two being shown. Each treatment stage comprises a relatively straight narrow long tube 3 having a substantially uniform inside transverse cross-section between the end portions having inlet and exit openings 4 and 5 respectively either one or both of which may be restricted (as compared to the internal diameter of the tube) and provided with apertured guides of non-abrasive materials to permit passage of the strand. Preferably, the exit 5 has a larger size of opening than inlet 4 in order to favor concurrent flow toward the exit 5. At the thread discharge end of the tube, there is provided a hollow conical sleeve 6, at least partially surrounding the tube and provided with a connection 7 for the admission of air under pressure. This sleeve operates on the air ejector principle and when air or other compressed gas is introduced into the sleeve at high velocity suction is induced at the exit 5 of the tube, thereby facilitating lacing up the device when starting up operations. Normally, the valve 8 is closed so that the ejector is not operating. Alternatively, lacing may be accomplished by momentarily placing a vacuum hose at the exit of the tube. One or more side connections such as that shown at 9, provides for the introduction of fluid into the tube 3, a pump 10 connected through valves 11 and 12 to the fluid supply reservoir 13 and discharge basin 14 respectively serving to feed the fluid into the tube 3. A catch basin 15 is positioned adjacent the entrance of the tube to catch any liquid that escapes at that point.

As the strand proceeds through the processing arrangement, it may proceed about driving wheels or godets 16 placed at intervals, such as between the successive fluid-treating stages. The godets may be driven at the same speed, or at increasing or decreasing speeds to effect stretching or permit shrinking in one or more treating stages. The successive stages may be in alignment or they may be offset or staggered. Also they may be either vertically or horizontally disposed.

In this arrangement, the treating fluid has a concurrent flow with the strand through by far the greatest portion of the length in the tube and

consequently the fluid itself serves to convey the strand through the tube. The treating fluid is introduced under low pressures and is controlled by pump 10 in conjunction with regulating valve 20, though in all cases substantially above atmospheric pressure. A certain amount of fluid escapes at 4 where the strand enters the tube and serves to remove any excess liquid retained by the strand from a preceding treatment stage. This occurs regardless of whether the particular fluid applied in the stage under consideration is a liquid or gas. Where the particular fluid under consideration is a liquid, it removes the excess of previously applied liquid which adheres to the strand and the resulting mixture is discharged into the catch basin 15 where it is segregated from the body of liquid which is discharged from the orifice 5 of the tube into the catch basin 14. In many cases, the liquid discharged into the basin 15 is much more contaminated than that discharged at 14 and consequently it is advantageous to subject the liquid obtained at the basin 15 to a separate chemical purification or recovery or process, any or all of these processes being termed herein as a "refreshment" process, before making further use of the liquid thus discharged. On the other hand, the liquid discharged at 14 is in many cases of sufficient purity to be remixed with the treatment liquid from the supply 13 and used in the treatment stage. The proportion of remixing can be controlled by adjustment of the valves 11 and 12.

On the other hand, when the fluid in the treatment stage under consideration is a gas, and especially heated air for accomplishing drying, its discharge through the orifice 4 where the strand enters the tube serves to remove excess liquid taken along from the previous treating stage, thereby economizing on the amount of heat and drying air needed in the drying stage.

A jacket 17 surrounds the tube (or a group of such tubes, if desired) and serves to control the temperature thereof, a heating or cooling medium being introduced and discharged by the parts 18 and 19 respectively or vice versa. A suitable medium may be steam or hot water whereas a cooling medium may be cold water or a brine.

The utilization of an arrangement herein disclosed for drying purposes is especially valuable because of the extremely uniform results that are obtained in a rapid efficient manner. This is of special importance when artificial filamentary material that has been freshly spun is to be subjected to its first drying. The stream of air that carries the strand through the tube causes it to flutter or whip from side to side in a sort of vibration wave all along the tube. This fluttering not only increases the contact of the air with the strand but also tends to stir up the air and by working the strand renders it pliable rather than harsh and stiff as is frequently the result of ordinary drying procedures where the filaments do not have the opportunity for such free vibration. The tension on the strand may be readily adjusted by varying the size of the tube 3 and of openings 4 and 5 and by adjusting the flow of air into the tube, such as by adjusting valve 20, or by adjusting speed of successive godets 16, and in this manner, the shrinkage of the strand during drying, if it is of a nature that tends to shrink, can be readily controlled. The application of heat externally of the tube by means of the jacket 17 assures that no condensation occurs on the inside wall of the tube 3, thereby preventing any possibility of irregularity in the dried strand resulting from the picking up of such condensed moisture by the whipping strand.

The internal diameter of the tube 3 may vary from about ⅛ to ½ inch while the diameters of the openings 4 and 5 when restricted are preferably about 1/64 to ⅛ inch.

While the fluid entrance 9 is shown passing directly through the jacket 17 into the tube 3, it may have considerable length within the heating or cooling jacket so that the fluid passing therein may be brought to proper temperature before introduction into the tube 3. This is shown at the part 9a in Figures 4 and 5 which extends longitudinally along the tube 3.

Figure 3 illustrates an embodiment in which the fluid entrance 9 is arranged toward the discharge end of the tube 3 and the strand inlet 4 is larger than the strand discharge opening 5 so that the fluid takes a countercurrent direction with respect to the strand through the tube. In this embodiment, the strand must be drawn through the device by suitable means, such as a positively driven wheel or godet or, in the case of a drying stage, by the collecting device itself which may be an ordinary winding or twisting machine. Such a drawing means is represented at 16a.

In Figure 4 a modification is shown in which the entrance 9 for introducing the fluid into the tube 3 is at an intermediate point of the tube 3 in the vicinity of or at the mid-point thereof and the strand inlet and exit openings are of approximately the same size, but preferably smaller than the tube diameter. Whereas in the arrangement of Figure 3, the net tension imparted to the strand by the treatment of fluid is in opposition to the discharge of the strand from the treatment stage, and the net tension in Figure 1 is in favor of the discharge of the strand from the treatment stage, that in Figure 4 approaches zero and, as in Figure 3, some drawing means is needed beyond the point of discharge of the strand from the stage. In all cases, it is contemplated that the strand will ultimately be taken up by a suitable collecting device.

Figure 5 illustrates a system for applying gases or vapors which it may be desirable to recover. The tube 3 arranged in the temperature controlling jacket 17, the conduit 9a directing the gas or vapor into the tube near its center, the strand inlet and exit openings 4 and 5, and the godet 16a for positively drawing the strand through the system all correspond to the elements of previous embodiments. However, there are important differences in that the openings 4 and 5 are preferably as restricted as possible to prevent escape of the gas or vapor without too much abrasion of the strand, and gas discharge connections 21 (connected to a vacuum pump 22 and a recovery system 23) are provided adjacent the ends of the tube 3. Where gas recovery is desired without concurrent or countercurrent flow thereof, the arrangements of the unit stages shown in Figures 1 and 3 may be modified in similar fashion i. e., restricting the strand inlet and exit openings and providing a vacuum side-connection at the end of the tube opposite the fluid entrance connection.

The present invention contemplates the application of the arrangements and methods herein disclosed for the purpose of the after-treatment with liquids of freshly spun artificial filaments, such as those obtained from viscose, cuprammonium cellulose, casein, alpha-protein, vinyl resins, cellulose esters, and the like. In

addition, the invention contemplates the application of the arrangements and processes herein disclosed for the treatment with fluids of natural products, such as spun yarns of natural fibers such as cotton, wool, silk as well as spun yarns of artificial fibers of staple fiber length. In the continuous processing of filamentary material, whether of natural character or of artificial freshly spun filaments, the invention contemplates the following of the liquid-treatment stages with a drying stage which may be performed in any suitable manner and in the preferred embodiment by the utilization of the arrangement and process herein described. In regard to the utilization of the invention for the liquid treatment of continuous filamentary material, the invention contemplates not merely the chemical purification, such as washing, desulfurization, bleaching and the like but also the application of dressings, finishes, sizes, lubricants, and conditioning agents in general, for rendering the resulting strands of fibers more amenable to textile processing and fabrication. As an example of this, the invention contemplates the application of a solution of the conditioning agent in either aqueous or organic or mixed solvents and the subsequent drying, that is removal from the strand of the solvent or solvents. While illustrative fluid treatments have been mentioned herein, the invention is also applicable to other liquid and gas or vapor treatments.

It is to be understood that the description herein is merely illustrative and that changes and variations may be made without departing from the spirit and scope of the invention as defined in the appended claims.

I claim:

1. A method of treating a continuous strand of filamentary material with a fluid comprising the steps of feeding the strand through a relatively long, narrow passage having an internal diameter of ⅛ to ½ inch and extending in a substantially straight course between strand inlet and exit openings at the extremities thereof at least one of said openings being restricted as it travels through the passage, introducing a treating fluid transversely through the side of the passage intermediate the extremities and in advance of the mid-point thereof and forcing the fluid to divide and flow alongside the strand through the passage toward both extremities at a sufficient velocity to support and convey the strand in the fluid as it travels through the passage, the strand being conveyed through the passage exclusively by the force of the fluid, and controlling the velocity of the fluid passage through the strand inlet and exit openings to thereby impart a predetermined tension on the strand as it travels through the passage.

2. A method of treating a continuous strand of filamentary material with a fluid comprising the steps of feeding the strand in succession through a plurality of long, narrow substantially straight passages, each passage having restricted strand inlet and exit openings at the extremities thereof, introducing treating fluids into the respective passages by directing the fluid for each passage transversely of the side thereof intermediate its extremities so that the fluid is forced to divide and flow through the passage toward both extremities thereof and imparts thereby a predetermined tension to the strand and increasing the velocity of the fluid flowing through the strand inlet opening of each passage except the first sufficiently to remove by turbulent action excess liquid adhering to the strand as it comes from the preceding treating passage.

3. A method of treating a continuous strand of filamentary material with a fluid comprising the steps of feeding the strand in succession through a plurality of long, narrow substantially straight passages, each passage having restricted strand inlet and exit openings at the extremities thereof, introducing treating fluids into the respective passages by directing the fluid for each passage transversely of the side thereof intermediate its extremities so that the fluid is forced to divide and flow through the passage toward both extremities thereof and imparts thereby a predetermined tension to the strand and increasing the velocity of the fluid flowing through the strand inlet opening of each passage except the first sufficiently to remove by turbulent action excess liquid adhering to the strand as it comes from the preceding treating passage, the fluids in a plurality of passages being liquids and the fluid in at least one subsequent passage being heated air.

4. A method of drying a continuous strand of filamentary material comprising the steps of feeding the strand through a relatively long, narrow passage having an internal diameter of ⅛ to ½ inch and extending in a substantially straight course between restricted strand inlet and exit openings at the extremities thereof, introducing air transversely through the side of the passage intermediate the extremities thereof and forcing the air to divide and flow alongside the strand through the passage toward both extremities at a sufficient velocity to support the strand substantially exclusively in the air and to impart a vibratory motion to the strand as it travels through the passage, controlling the velocity of the air passing through the strand inlet and exit openings to thereby impart a predetermined tension on the strand as it travels through the passage and controlling the temperature of the passage by the external application of heat.

5. A method of drying a continuous strand of filamentary material comprising the steps of feeding the strand through a relatively long, narrow passage having an internal diameter of ⅛ to ½ inch and extending in a substantially straight course between restricted strand inlet and exit openings at the extremities thereof, introducing air transversely through the side of the passage intermediate the extremities thereof and forcing the air to divide and flow alongside the strand through the passage toward both extremities at a sufficient velocity to support the strand substantially exclusively in the air and to impart a vibratory motion to the strand as it travels through the passage, controlling the velocity of the air passing through the strand inlet and exit openings to thereby impart a predetermined tension on the strand as it travels through the passage, controlling the temperature of the passage by the external application of heat, and preheating the air in advance of its introduction into the passage.

6. A method of drying a continuous strand of filamentary material comprising the steps of feeding the strand through a relatively long, narrow passage having an internal diameter of ⅛ to ½ inch and extending in a substantially straight course between restricted strand inlet and exit openings at the extremities thereof, introducing air transversely through the side of the passage intermediate the extremities and in advance of the midpoint thereof and forcing the

air to divide and flow alongside the strand through the passage toward both extremities at a sufficient velocity to support and convey the strand substantially exclusively by the air and to impart a vibratory motion to the strand, controlling the velocity of the air passing through the strand inlet and exit openings to thereby impart a predetermined tension on the strand as it travels through the passage, controlling the temperature of the passage by the external application of heat and preheating the air in advance of its introduction into the passage.

7. A method of treating a continuous strand of filamentary material with a fluid comprising the steps of feeding the strand in succession through a plurality of long, narrow substantially straight passages, each passage having restricted strand inlet and exit openings at the extremities thereof, introducing a treating fluid into each of the passages by directing the fluid transversely of the side thereof intermediate its extremities so that the fluid is forced to divide and flow through the passage toward both extremities thereof and imparts thereby a predetermined tension to the strand and increasing the velocity of the fluid flowing through the strand inlet opening of each passage except the first sufficiently to remove by turbulent action any liquid adhering to the strand as it comes to the inlet opening.

8. Apparatus for the fluid treatment of continuous strands of filamentary material comprising a long, narrow, substantially straight tube having restricted end portions having strand inlet and exit openings at the extremities thereof, said tube having a substantially uniform inside transverse cross-section between the end portions, a fluid introduction inlet opening in the side wall of the tube disposed intermediate the end portions thereof, means for forcing fluid under low pressure at controlled velocity through

the fluid inlet so that the fluid is directed transversely of the strand at the point of introduction and divides to flow toward both extremities of the tube, a jacket around the tube, means for varying the temperature in the jacket to control the temperature of the tube, and a conduit having a part of its length extending longitudinally along the tube, said part being located inside the jacket communicating at one end with the fluid inlet opening of the tube and at the other end with the fluid-forcing means.

9. Apparauts as defined in claim 8 comprising suction means disposed in proximity to both the strand entrance and the strand exit openings of the tube for removing the main body of the fluid therefrom.

WAYNE A. SISSON.

REFERENCES CITED

The following references are of record in the file of this patent:

UNITED STATES PATENTS

Number	Name	Date
1,103,806	Mertz	July 14, 1914
1,531,343	Naito	Mar. 31, 1925
1,723,514	Klein	Aug. 6, 1929
1,871,100	Walton et al.	Aug. 9, 1932
2,090,352	Herrmann	Aug. 17, 1937
2,118,261	Andrews	May 31, 1938
2,317,448	Dreyfus	Apr. 27, 1943
2,341,615	Hoffman	Feb. 15, 1944
2,360,352	Lodge	Oct. 17, 1944
2,364,467	Nickerson	Dec. 5, 1944
2,371,579	Cole	Mar. 13, 1945
2,398,856	Reel	Apr. 23, 1946

FOREIGN PATENTS

Number	Country	Date
17,736	Great Britain	1889

Certificate of Correction

Patent No. 2,509,279 May 30, 1950

WAYNE A. SISSON

It is hereby certified that error appears in the printed specification of the above numbered patent requiring correction as follows:

Column 5, line 56, for the word "passage" read *passing*;

and that the said Letters Patent should be read with this correction therein that the same may conform to the record of the case in the Patent Office.

Signed and sealed this 29th day of August, A. D. 1950.

[SEAL]

THOMAS F. MURPHY,
Assistant Commissioner of Patents.