United States Patent [19]

Fischer

[11] **3,895,576**

[45] **July 22, 1975**

[54] **MAIL ORDER SALES DEVICE**

[75] Inventor: **Edward L. Fischer,** Indianapolis, Ind.

[73] Assignee: **The Indiana National Bank,** Indianapolis, Ind.

[22] Filed: **Mar. 11, 1974**

[21] Appl. No.: **449,984**

Related U.S. Application Data

[62] Division of Ser. No. 234,211, March 13, 1972, abandoned.

[52] **U.S. Cl.** **101/369;** 282/25

[51] **Int. Cl.** **B411 1/36;** B411 47/04

[58] **Field of Search** 101/368, 369; 282/25; 283/7

[56] **References Cited**

UNITED STATES PATENTS

2,305,127	12/1942	Albers	101/369
2,825,498	3/1958	Alves	229/68
3,073,435	1/1963	Devon	206/46
3,111,336	11/1963	Schumacher	282/25
3,186,735	6/1965	Hanrahan	282/25
3,243,205	3/1966	Borgquist	229/68
3,287,154	11/1966	Haas	117/36.9
3,294,423	12/1966	Mudd	282/25
3,306,632	2/1967	Stahmer	282/25
3,556,563	1/1971	Scheinberg et al.	283/7
3,759,179	9/1973	Guido	101/368

Primary Examiner—Clyde I. Coughenour

Attorney, Agent, or Firm—Woodard, Weikart, Emhardt & Naughton

[57] **ABSTRACT**

A device and method for mail order sales utilizing credit cards. The device is a paper construction having a piece of imaging paper secured thereto forming a credit card receiving pocket. The imaging paper is separable from the paper construction for mailing with the order form. The method includes the steps of inserting the credit card into the pocket with the upraised identification data on the credit card being positioned adjacent to the imaging paper. An element is then rubbed against the exterior surface of the imaging paper so as to force the interior surface of the imaging paper against the upraised identification data to transfer and store an image of the data on the imaging paper. The credit card is then removed and the imaging paper is removed from the paper construction and mailed to the seller along with the order form.

3 Claims, 3 Drawing Figures

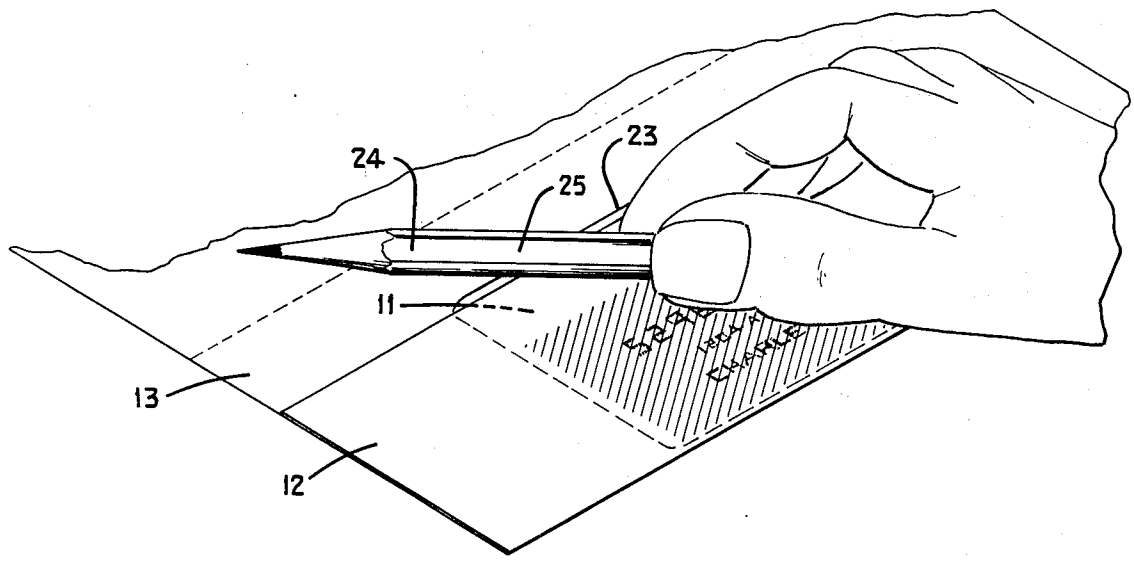

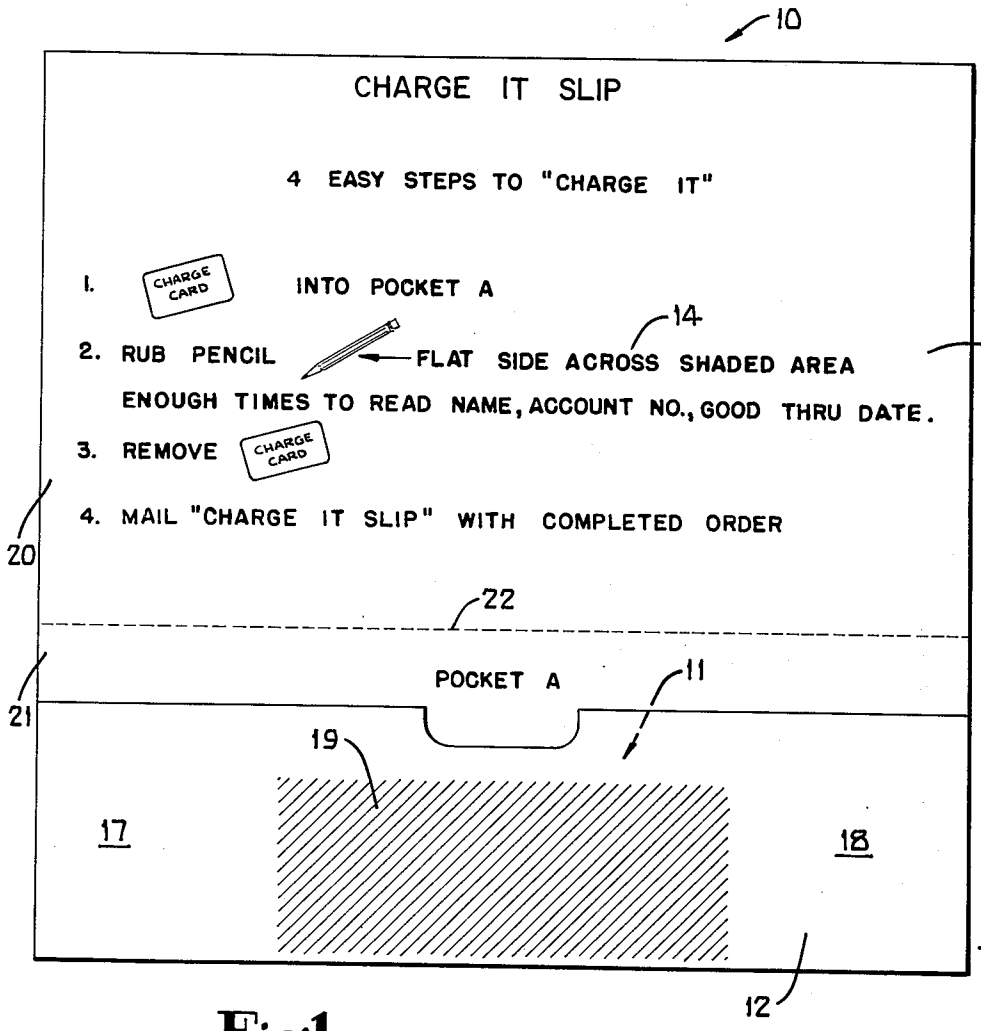

Fig.1.

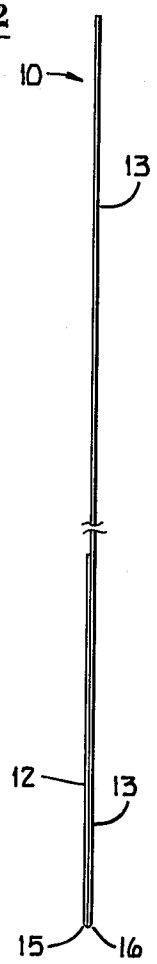

Fig.2.

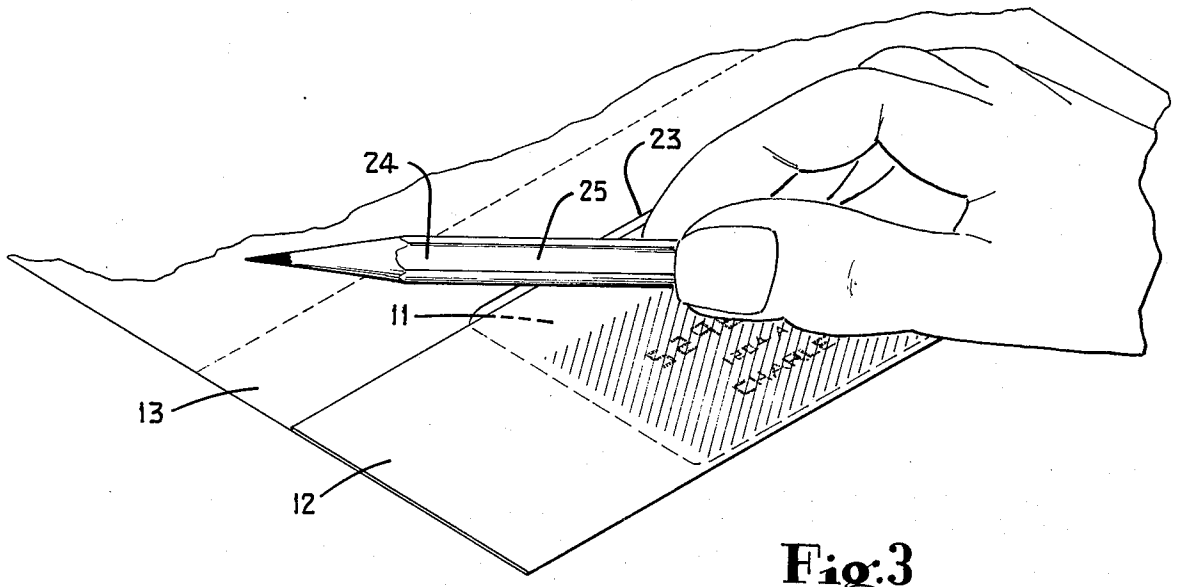

Fig.3

MAIL ORDER SALES DEVICE

CROSS REFERENCE TO RELATED APPLICATION

This application is a divisional application of my copending application, Ser. No. 234,211, filed Mar. 13, 1972, now abandoned.

BACKGROUND OF THE INVENTION

1. Field of the Invention

This invention is in the field of credit card systems.

2. Description of the Prior Art

Disclosed herein is a device and method for displaying and storing an image of the upraised identification data on a credit card onto a piece of paper. In the U.S. Pat. No. 3,556,563, issued to R. L. Scheinberg, an apparatus and method is disclosed for imprinting a facsimile of the upraised indicia of a credit card onto a sheet of paper. In U.S. Pat. No. 2,730,457, assigned to The National Cash Register Company, a paper is disclosed which has a dry coating of marking capsules which will rupture under writing and marking pressures to leave a distinctively colored mark at the points of pressure. In U.S. Pat. No. 3,516,846 assigned to Minnesota Mining and Manufacturing Company, a sheet material is disclosed which has microcapsules filled with liquids. The microcapsules rupture under writing and marking pressures leaving a mark on the sheet.

When ordering an item by mail, and charging the cost thereof to the purchaser's credit card, it is desirable to provide the seller with proof of possession of the credit card. Currently, the buyer writes in on the order form the number associated with the credit card along with the buyer's name and address. In the event that an erroneous number is accidentally or intentionally entered, then the seller may not become aware of the erroneous number until after the goods are shipped to the buyer. It is therefore desirable to provide a means for proving to the seller that the buyer has in his possession the credit card which is identified on the order form. Disclosed herein is a device and method for transferring an image of the upraised identification data on the credit card onto a piece of paper enclosed with the order form.

SUMMARY OF THE INVENTION

One embodiment of the present invention includes a mail order sales device comprising a paper construction having a pocket for receipt of a credit card having upraised indicia, the paper construction forming the pocket having means adjacent the indicia operable to permanently display and store an image of the indicia when rubbed by a carbonless member against the indicia.

Another embodiment of the present invention includes a method of mail ordering comprising the steps of positioning a credit card having upraised identification data beneath a piece of carbonless imaging paper with the upraised identification data adjacent the paper, next, rubbing a carbonless element against the paper forcing the paper against the data transferring the image of the data to the paper, then, enclosing the paper with a completed order form in a mailing envelope.

It is an object of the present invention to provide a device for allowing mail orders with credit cards with means provided to the seller of identifying the credit card in the possession of the buyer.

A further object of the present invention is to provide a method of proving the possession of a credit card in a mail order buyer.

Related objects and advantages of the present invention will be apparent from the following description.

BRIEF DESCRIPTION OF THE DRAWING

FIG. 1 is a plan view of the device incorporating the present invention.

FIG. 2 is an enlarged fragmentary end view of the device of FIG. 1 viewed in the direction of arrows 2—2.

FIG. 3 is a fragmentary perspective view of the device of FIG. 1 with a pencil being rubbed against the outer surface of the device.

DESCRIPTION OF THE PREFERRED EMBODIMENTS

For the purposes of promoting an understanding of the principles of the invention, reference will now be made to the embodiments illustrated in the drawing and specific language will be used to describe the same. It will nevertheless be understood that no limitation of the scope of the invention is thereby intended, such alterations and further modifications in the illustrated device, and such further applications of the principles of the invention as illustrated therein being contemplated as would normally occur to one skilled in the art to which the invention relates.

Referring now more particularly to FIG. 1, there is shown a mail order sales device 10 which is a paper construction provided with a pocket 11 for the receipt of a credit card having upraised indicia. Device 10 has a piece of self contained imaging paper 12 which is carbonless and secured and mounted to a piece of plain paper 13. Various printed instructions 14 are provided on paper 13.

The self containing imaging paper 12 is provided with a dry coating of capsules which will rupture under writing and marking pressures leaving a mark at the points of pressure. Such paper is disclosed in the U.S. Pat. No. 3,516,846 issued to Gale W. Matson and the disclosure contained therein relating to said paper is hereby incorporated by reference. Another similar paper is disclosed in the U.S. Pat. No. 2,730,457 issued to Barrett K. Green and Lowell Schleicher which is also hereby incorporated by reference.

Paper 13 has a width with paper 12 extending thereacross. Paper 12 and the plain paper 13 each have respectively bottom edges 15 and 16 which are aligned and secured together forming the bottom of pocket 11. The side edge portions 17 and 18 which extend from shaded area 19 to each edge of the device are secured together on either side of pocket 11. The shaded area 19 is provided on the outside surface of paper 12 so as to be in registry with the credit card when inserted in pocket 11. Thus, the length of shaded area 19 is approximately the length of the credit card to be inserted into the pocket. The top portion 20 of device 10 is separated from the bottom portion 21 of device 10 by a perforated tearable line 22. The imaging paper as well as bottom portion 21 may therefore be separated from the top portion 20 by tearing along line 22. The imaging paper is operable to permanently display and store an image of the upraised indicia of the credit card when the imaging paper is rubbed by an element against the indicia.

Referring to FIG. 3, a credit card 23 is shown positioned within pocket 11 which is formed between paper 13 and paper 12. Credit card 23 is positioned within pocket 11 so that the upraised identification data on the credit card is immediately adjacent the interior surface of paper 12. The credit card is therefore beneath paper 12 and on top of paper 13. The positioning of the credit card into pocket 11 includes the step of not only positioning the credit card beneath the imaging paper but also the step of inserting the credit card into a pocket formed by the piece of paper 12 which is secured to paper 13. The method of mail ordering next includes the step of rubbing an element, such as a pencil 24, against the paper so as to force the paper against the upraised identification data of the credit card thereby transferring a permanent image of the upraised identification data to the paper. One of the flat longitudinally extending carbonless sides 25 of pencil 24 is rubbed against the outer surface of paper 12 forcing the inner surface of paper 12 against the upraised identification data. Any type of carbonless member may be used to rub the imaging paper against the credit card in order to have the imaging paper display the upraised credit card data. Credit card 23 is then removed from the pocket and paper 12 is removed from the paper construction by tearing along line 22. Paper 12 along with a completed order form are then enclosed in a mailing envelope and the envelope is mailed to the seller. A variety of means may be used to secure papers 12 and 13 together. For example, staples or adhesives may be used to secure the papers together.

The shaded area 19 of the carbonless paper guides insertion of the card into the pocket. The flat surface of pencil 24 which is used to rub paper 12 against the upraised indicia of the credit card is both carbonless and ink free.

While the invention has been illustrated and described in detail in the drawings and foregoing decription, the same is to be considered as illustrative and not restrictive in character, it being understood that only the preferred embodiments have been shown and described and that all changes and modifications that come within the spirit of the invention are desired to be protected.

The invention claimed is:

1. The combination of:

a credit card having a sheet body with upraised characters, said body including a length, width, height and thickness;

a paper construction including a pocket with said pocket including:

a piece of plain paper backing having a size larger than said sheet body and including a first portion with instruction thereon and a second portion; and further including:

means mounted to said second portion of said backing operable to permanently display and store an image of said characters when rubbed by a member against said characters, said means including a top piece of pressure sensitive paper having an outer surface, an inner surface and a size also larger than said sheet body and having a dry coating of pressure rupturable capsules on said pressure sensitive paper which rupture when said outer surface of said pressure sensitive paper is rubbed forcing said inner surface of said pressure sensitive paper against said upraised characters leaving the image of said upraised characters on said pressure sensitive paper, said pressure sensitive paper including a top edge, a bottom edge and opposite side portions with a fixed distance between said top edge and said bottom edge, said pressure sensitive paper being mounted to said plain paper backing along said opposite side portions and said bottom edge of said pressure sensitive paper with said top edge of said pressure sensitive paper being free relative to said backing forming an opened top pocket in which said credit card is positioned and held when rubbed, said pocket being sized and adapted to receive said credit card with said upraised characters being adjacent and in contact with said pressure sensitive paper and on top of said plain paper backing, said height of said sheet body being greater than said fixed distance with said credit card projecting out of said pocket when positioned therein.

2. The combination of claim 1 wherein said pressure sensitive paper has a width equal to said plain paper but greater than said sheet body and a height less than said plain paper, said pressure sensitive paper has a center portion between said opposite side portions with said center portion including a width equal to said pocket, said pressure sensitive paper is removably attached to at least a portion of said paper backing.

3. The combination of claim 2 wherein:

said center portion is shaded to guide insertion of said sheet body into said pocket; and,

said plain paper and said pressure sensitive paper are both flat without bends.

* * * * *