May 10, 1932. P. S. McCANN 1,857,817

WINDING AND REELING DEVICE

Filed March 23, 1929

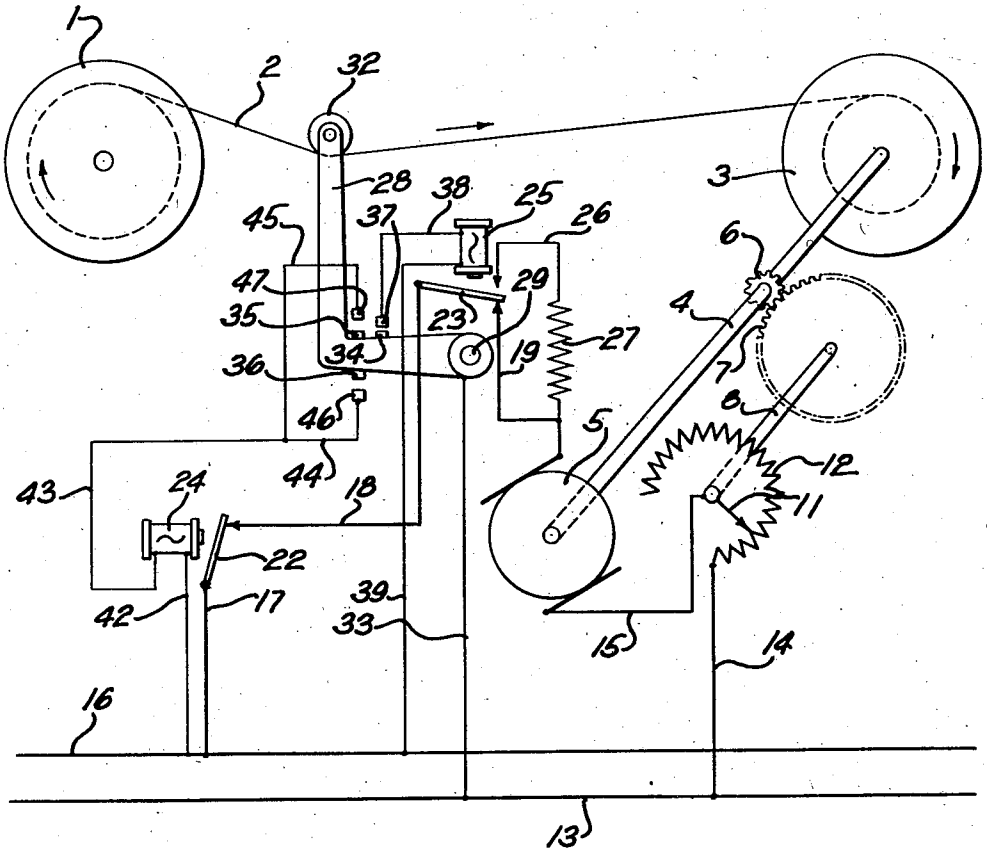

Inventor
Paul S. McCann
By N. A. Latimer Atty.

Patented May 10, 1932 1,857,817

UNITED STATES PATENT OFFICE

PAUL STANCLIFF McCANN, OF LA GRANGE, ILLINOIS, ASSIGNOR TO WESTERN ELECTRIC COMPANY, INCORPORATED, OF NEW YORK, N. Y., A CORPORATION OF NEW YORK

WINDING AND REELING DEVICE

Application filed March 23, 1929. Serial No. 349,295.

This invention relates to winding and reeling devices, and more particularly to a control system for winding and reeling machines.

An object of the invention is the provision of a winding device having a simple, highly sensitive, and efficient control system.

In accordance with one embodiment, the invention contemplates the provision of a takeup device, independent of the machine from which the material is to be received, comprised of a takeup reel driven by an electric motor, the speed of which is desired to be controlled as determined by certain conditions. The speed of the motor is controlled by a rheostat actuated by power from the motor to introduce progressively resistance in the circuit of the motor to compensate for the increased diameter of the winding surface of the takeup reel and thereby normally maintain the effective speed of the takeup reel constant. In addition to the control of the motor by the rheostat normally to maintain constant the effective speed of the takeup reel, a control means responsive to the tension of the material being wound is provided which comprises means responsive to an increase in tension in the material being wound to introduce an additional resistance in the circuit of the motor, and operative upon a return of the tension to normal to restore the resistance of the circuit to normal. The tension responsive means is also actuated due to an abnormal increase or decrease in tension in the material or the occurrence of a break therein to open the motor circuit and stop the rotation of the takeup reel.

Other features and advantages of the invention will become apparent from the following detailed description of one embodiment thereof, reference being had to the accompanying drawing showing a single diagrammatic view of a device embodying the features of this invention.

Referring now to the drawing the numeral 1 designates a strand material working machine which, for the purpose of illustration, has been shown as a reel from which a strand 2 is being drawn by a takeup reel 3. The reel 3 is mounted on a shaft 4 driven by an electric motor 5, preferably of the slip ring induction type. A pinion gear 6 is mounted on the shaft 4 and actuates suitable reduction gearing represented on the drawing by a large spur gear 7 to transmit rotary motion to a shaft 8 on the end of which is mounted a contact arm 11 of a small dial type rheostat 12. The resistance coil of the rheostat 12 is connected by a conductor 14 to a conductor 13 which in turn is connected to a source of supply (not shown) and the contact arm 11 of the rheostat is connected to the motor 5 by a conductor 15.

The electrical circuit to the motor 5 is completed from a main conductor 16 through conductors 17, 18 and 19 and armatures 22 and 23 and back contacts of alternating current relays 24 and 25 respectively. The energization of the relay 25 will move the armature 23 upwardly into contact with its front contact and thereby to conductor 26 to interpose a resistance 27, connected in the conductor 26, and consequently in the circuit of the motor 5. The energization of relay 24 will move the armature 22 out of contact with its back contact to disconnect the current supply from the motor.

A control lever 28 is pivoted at 29 and carries at its upper end an idler pulley 32 of insulating material which bears on the strand 2 and which is supported thereby. The control lever is connected by a conductor 33 to the conductor 13 and has three contacts 34, 35 and 36 mounted thereon. The contact 34 is adapted to effect a wiping engagement with a terminal 37 of a conductor 38 which is connected to one side of the winding of the relay 25. The other end of the winding of the relay 25 is directly connected by a conductor 39 to the conductor 16 which is also directly connected to one end of the winding of the relay 24 by a conductor 42. The other end of the winding of the relay 24 is connected to a conductor 43 from which conductors 44 and 45 extend to terminals 46 and 47 respectively, which may be engaged by the contacts 36 and 35 respectively, depending upon the movement of the control lever 28. The contact 35 will engage the terminal 47 immediately after the contact 34 has wiped over the terminal 37 and been disengaged

therefrom. The relays 24 and 25 are of the alternating current type, but direct current relays could be used if the motor were of the type supplied with direct current.

It is believed that a better understanding of the invention will be had by reference to the following description of the operation thereof. A strand of wire having been worked upon by mechanism of which the reel 1 forms a part is passed under the idler pulley 32 and secured to the drum of the takeup reel 3. Current is then supplied to the conductors 13 and 16 to start the motor 5. The motor will drive the shaft 4 to cause rotation of the reel 3 in a clockwise direction and through the reduction gearing represented by the spur gear 7 to cause a proportional rotation of the contact arm 11 in a counter-clockwise direction so that as the amount of material on the reel 3 increases, resulting in an increase in the diameter of the winding surface thereof, resistance will be progressively introduced into the rotor circuit of the motor 5 by the rheostat 12. The current will be supplied to the motor from the conductor 13 through the conductor 14, the resistance coil of the rheostat, the contact arm 11, and the conductor 15 to the motor and through the motor 5, the conductor 19, armature 23 of the relay 25, conductor 18, armature 22 of the relay 24, and conductor 17 connected to conductor 16.

Upon an increase in tension in the strand 2 the control lever 28 will be rocked about its pivot 29 in a clockwise direction until the contact 34 engages the terminal 37 whereupon electrical energy will be supplied through the conductor 33, the control lever 28, contact 34, terminal 37, conductor 38 to the relay 25, and from the relay 25 the circuit will be completed to the conductor 16 through the conductor 39 to energize the relay 25. The energization of relay 25 draws its armature 23 upwardly to disconnect the conductor 19 from the source of supply and connect in place thereof the conductor 26 having the fixed resistance 27 therein, in this manner, upon increase in tension in the strand being withdrawn from the reel 1, a fixed resistance will be introduced in the circuit of the motor to reduce its speed.

In the event that an abnormal amount of tension occurs in the strand 2, the lever 28 will be moved in a clockwise direction beyond the point where contact 34 engages terminal 37 and the contact 35 will engage terminal 47 to complete a circuit from the conductor 13 through conductor 33, the lever 28, contact 35, terminal 47, the conductors 45 and 43, the windings of the relay 24 and the conductor 42 to the conductor 16, to effect the energization of relay 24. Upon energization of the relay 24 in this manner the armature 22 will be moved out of contact with the conductor 18 to disconnect the motor from the conductor 16, thus stopping the motor and the contact 34 having passed the terminal 37 the relay 25 will be de-energized. In the event that there is an abnormal decrease in the tension of the strand, the lever 28 will be moved in a counter-clockwise direction to move the contact 36 into engagement with the terminal 46 to energize the relay 24 in a manner similar to that described in connection with an abnormal increase in tension in the wire, the only difference being that the current for energizing the relay passes through the conductor 44 rather than through the conductor 45.

Although this invention has been described as applied to a device for taking up a strand from a material working machine, it has many other applications and should be limited only by the scope of the appended claims.

What is claimed is:

1. In a device for reeling material, a takeup reel for receiving the material from a source of supply, a source of motive power for driving the takeup reel, means for reducing the effectiveness of the source of motive power, means independent of the means for reducing said effectiveness and responsive to tension in the material for further reducing said effectiveness, and means responsive to an abnormal increase or decrease in tension in the material for rendering the source of motive power inoperative.

2. In a device for reeling strand material, a takeup reel for receiving strand material from a source of supply, a motor for driving the takeup reel independently of the source of supply, means for progressively reducing the speed of the motor, means independent of the first mentioned means for reducing the speed of the motor, means for stopping the motor, and a control member movable in response to normal variations in tension in the material to control said independent means and to render the stopping means effective upon an abnormal increase or decrease in tension in the material.

3. A control system for a takeup device comprising a takeup reel, means for driving the takeup reel, means driven in synchronism with the take-up reel for progressively reducing the speed of the driving means, and independent means responsive to variations in the tension in the material to control the speed of the driving means.

4. In combination a takeup reel, an electric driving motor therefor, means actuated through the rotation of the take-up reel for varying the supply of current to the motor as the amount of material on the takeup reel varies, and means responsive to tension in the material being wound onto the takeup reel for controlling the supply of current to the motor.

5. In combination a takeup reel, an electric driving motor therefor, means actuated

through the rotation of the take-up reel for varying the supply of current to the motor as the amount of material on the takeup reel varies, means responsive to tension in the material being wound on the takeup reel for controlling the supply of current to the motor, and means responsive to an abnormal tension in the material being wound for disconnecting the supply of current to the motor.

6. In combination a rotary takeup member, an electric driving motor therefor, a rheostat in the motor circuit, means interconnecting the takeup member and the rheostat to progressively increase the resistance of the latter, a control lever, a pulley mounted on the control lever and engaging the material being wound on the takeup member, contact members mounted on the control lever, a terminal adapted to be engaged by one of the contact members upon movement of the control arm in response to tension in the material, and means operative upon the engagement of said terminal for retarding the motor.

7. In combination a rotary takeup member, a driving motor therefor, means responsive to the amount of material on the takeup member for varying the speed of the motor, a pivoted control lever movable in response to tension in the material passing to the takeup member, contact members mounted on the control lever, a terminal adapted to be engaged by one of the contact members upon movement of the control lever, means effective upon such engagement to retard the motor, and terminals adapted to be engaged by other of said contact members upon movement of the control lever in response to an abnormal increase in tension in the material, and means controlled by said last mentioned terminals to stop the driving motor.

8. In combination a rotary takeup member, an electrical driving motor therefor, means responsive to the rotation of the takeup member for progressively interposing resistance in the motor circuit, a control lever movable in response to tension in the material passing to the takeup member, means for interposing additional resistance in said circuit upon movement of the control lever, and means for opening said circuit upon movement of the control lever beyond predetermined limits.

In witness whereof, I hereunto subscribe my name this 11th day of March, A. D. 1929.

PAUL STANCLIFF McCANN.