US 20130193905A1

(19) **United States**

(12) **Patent Application Publication**

(10) **Pub. No.: US 2013/0193905 A1**

(43) **Pub. Date: Aug. 1, 2013**

Wilson

(54) **CONTAINER AND REMOVABLE PHOTOVOLTAIC CHARGING PACK**

(71) Applicant: **Global Resource Management, Inc.**, Alsip, IL (US)

(72) Inventor: **David M. Wilson**, Alsip, IL (US)

(73) Assignee: **GLOBAL RESOURCE MANAGEMENT, INC.**, Alsip, IL (US)

(21) Appl. No.: **13/800,583**

(22) Filed: **Mar. 13, 2013**

Related U.S. Application Data

(62) Division of application No. 12/568,260, filed on Sep. 28, 2009, now Pat. No. 8,410,748.

(60) Provisional application No. 61/270,291, filed on Jul. 7, 2009.

Publication Classification

(51) **Int. Cl.**
H02J 7/00 (2006.01)

(52) **U.S. Cl.**
CPC ***H02J 7/0042*** (2013.01)
USPC **320/101**

(57) **ABSTRACT**

A portable container includes a body having an exterior surface and defining an interior compartment, and a photovoltaic (PV) charging pack including a PV panel and a compartment for containing a portable electronic device. The PV charging pack is removably coupleable to the exterior surface, such that the PV panel is positioned to absorb light energy when the PV charging pack is coupled to the exterior surface.

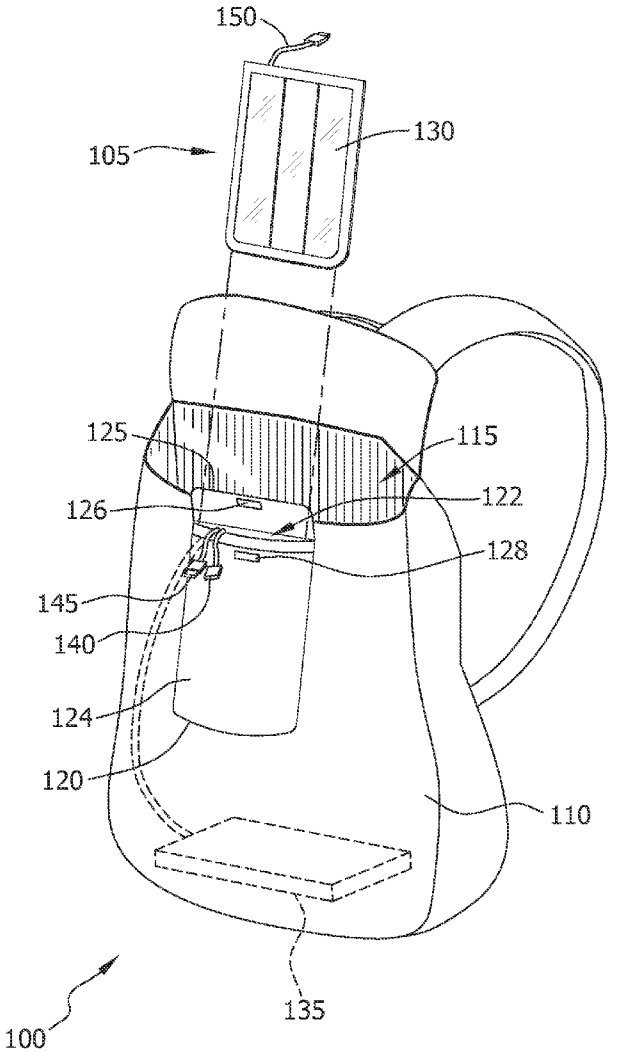

FIG. 1

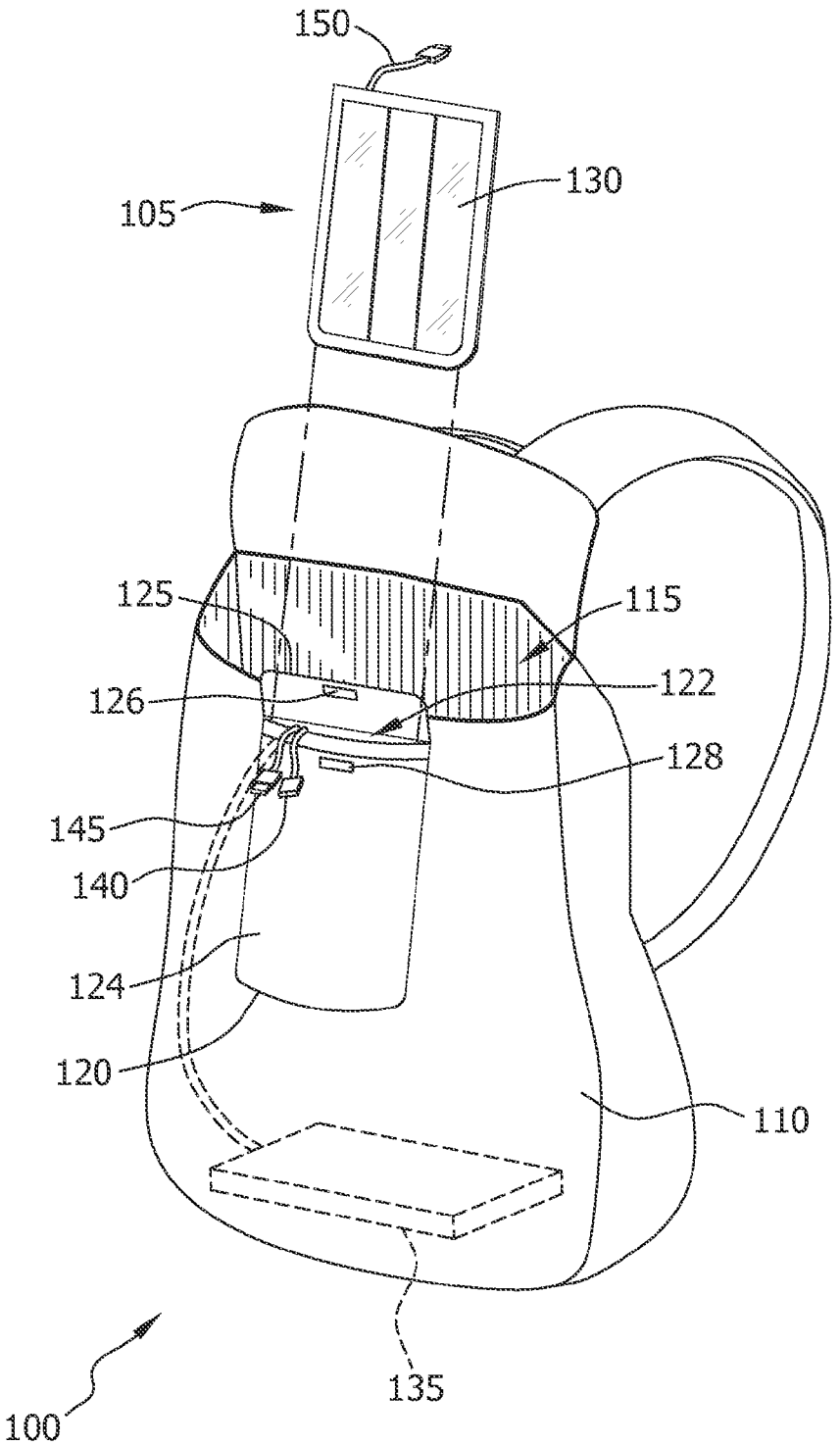

FIG. 2

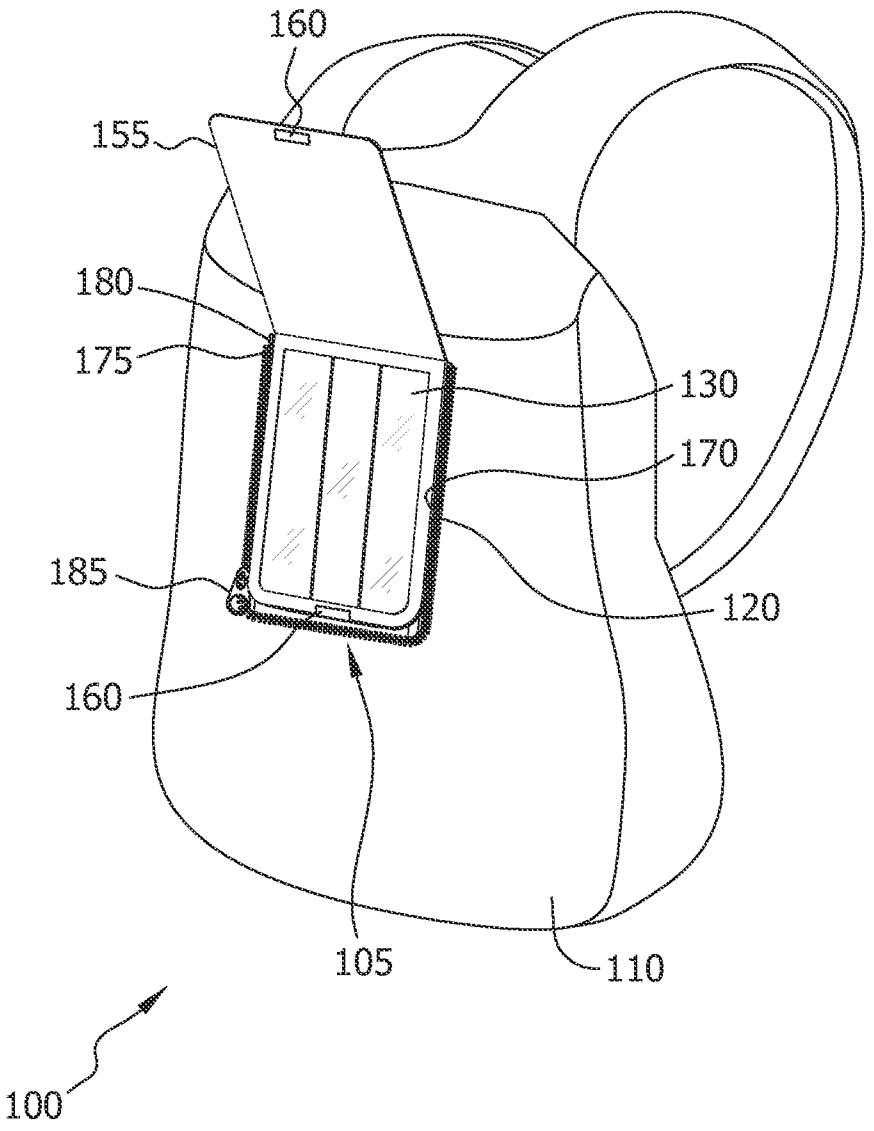

FIG. 3

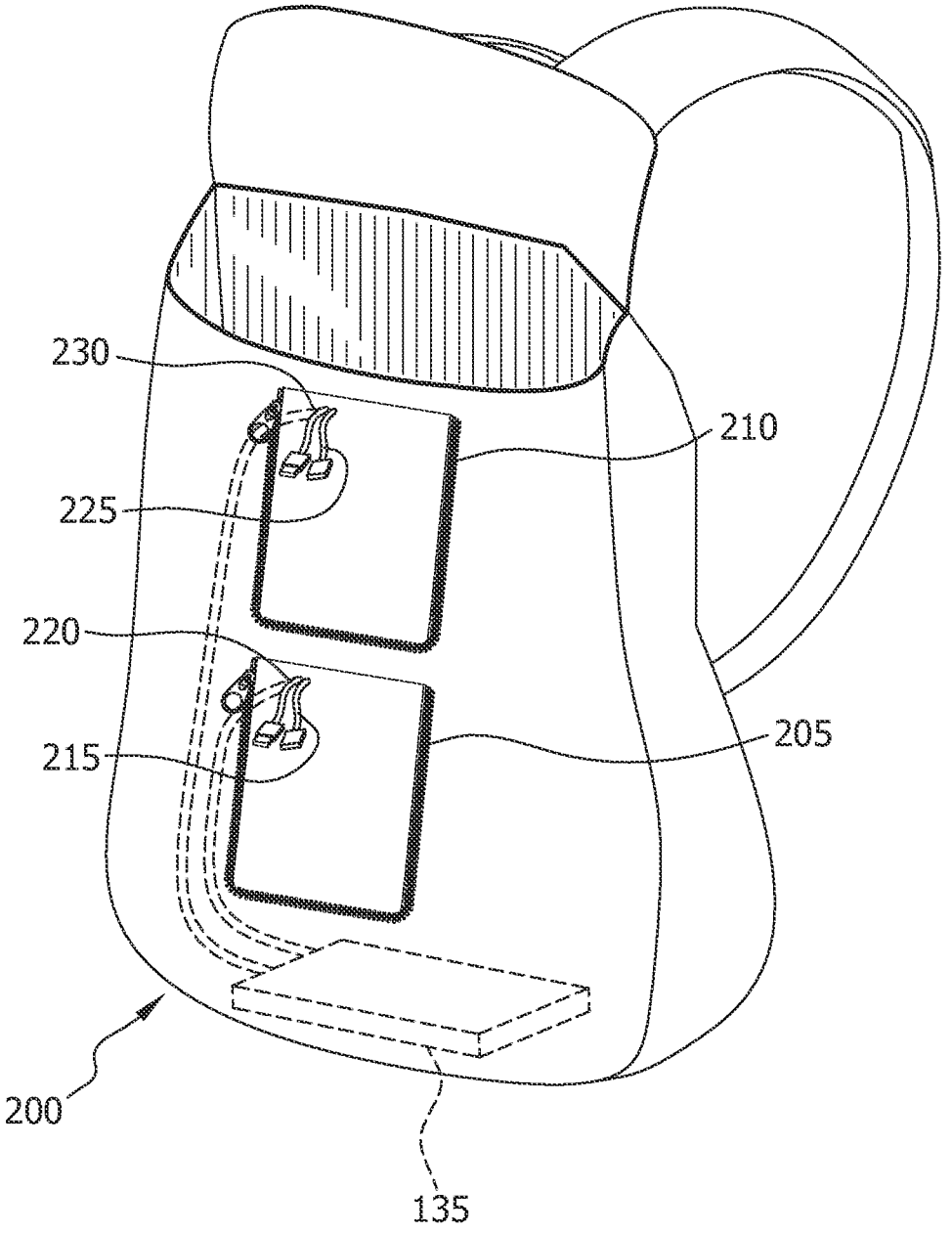

FIG. 4

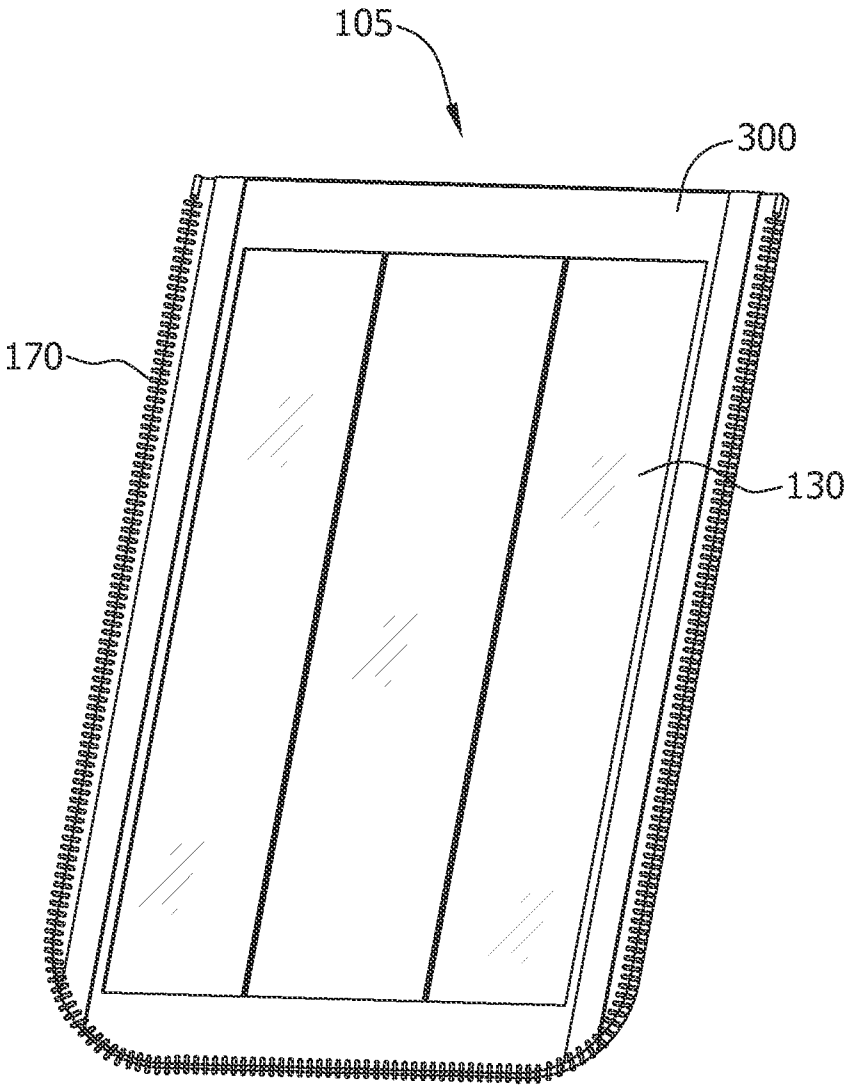

FIG. 5

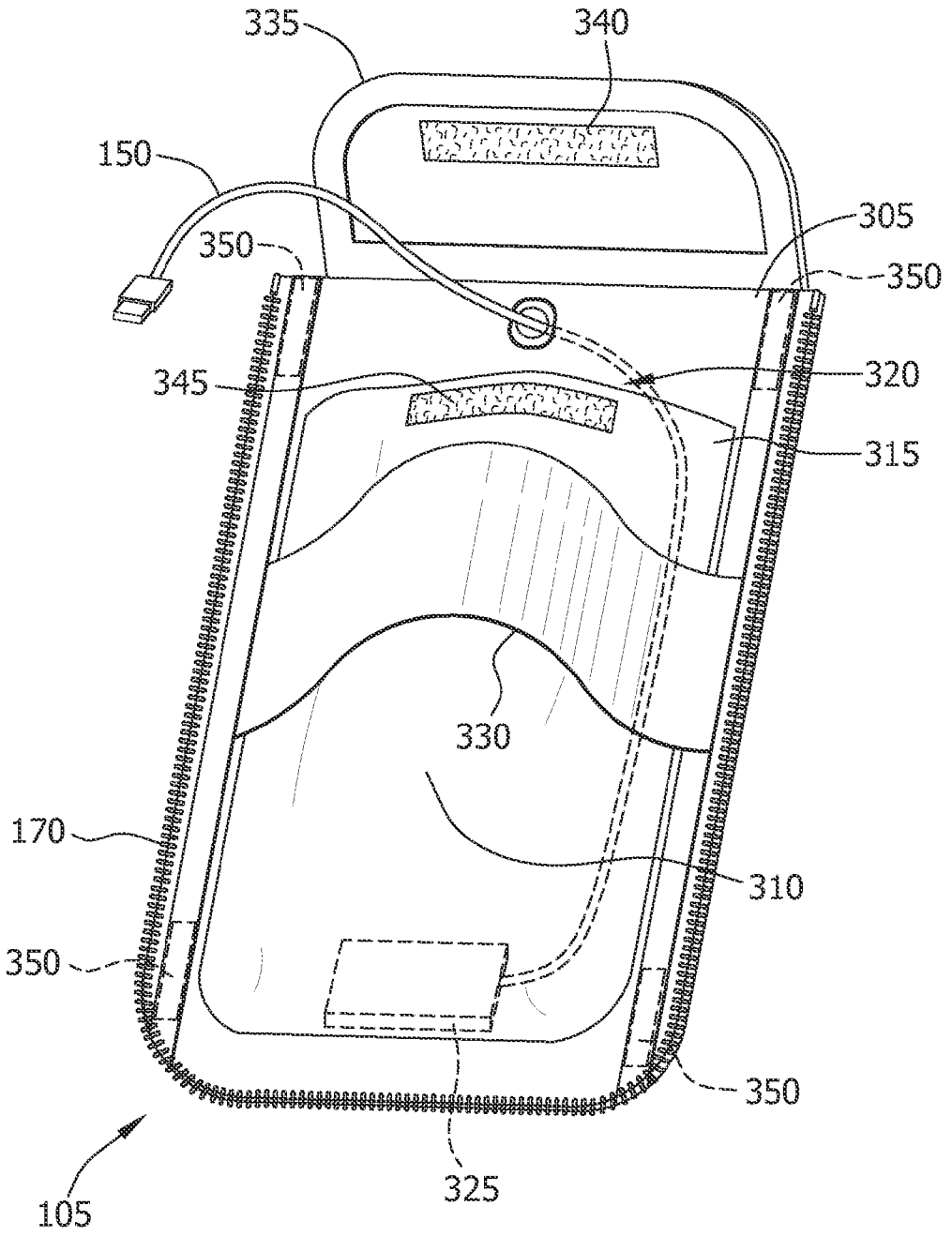

FIG. 6

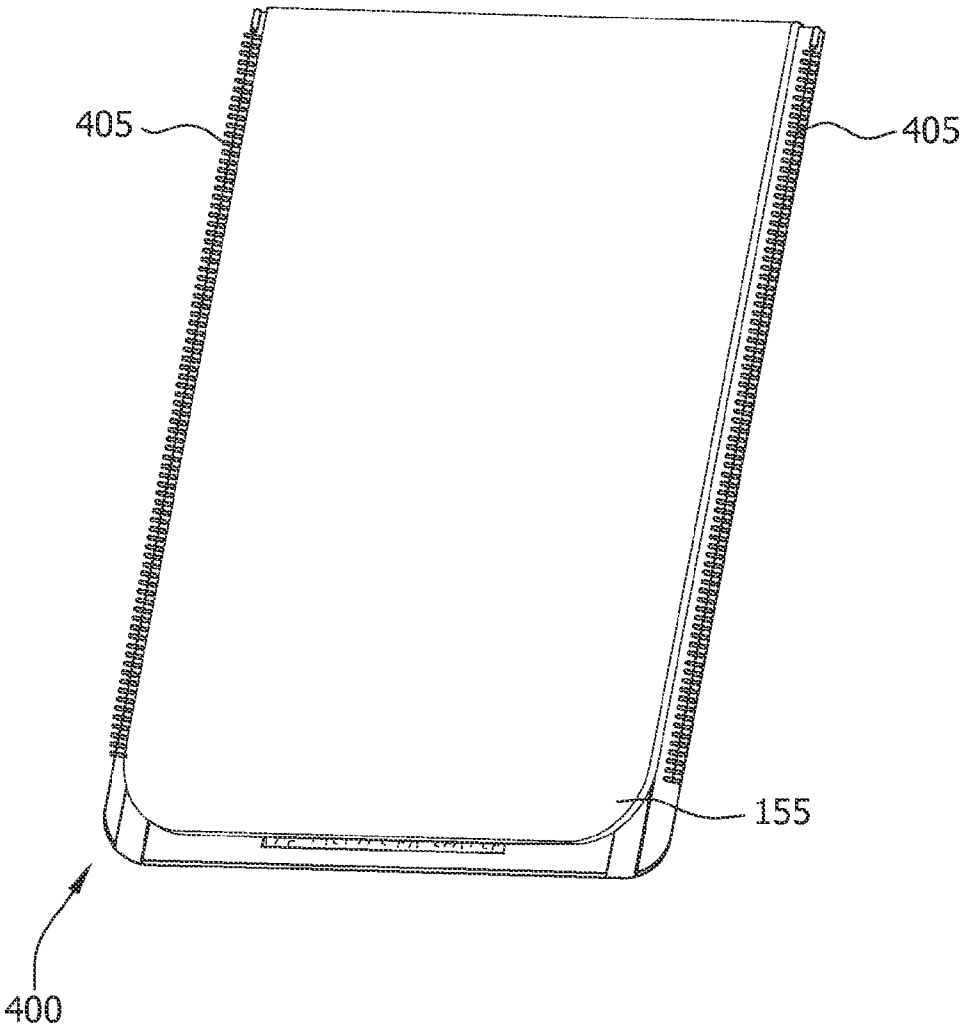

FIG. 7

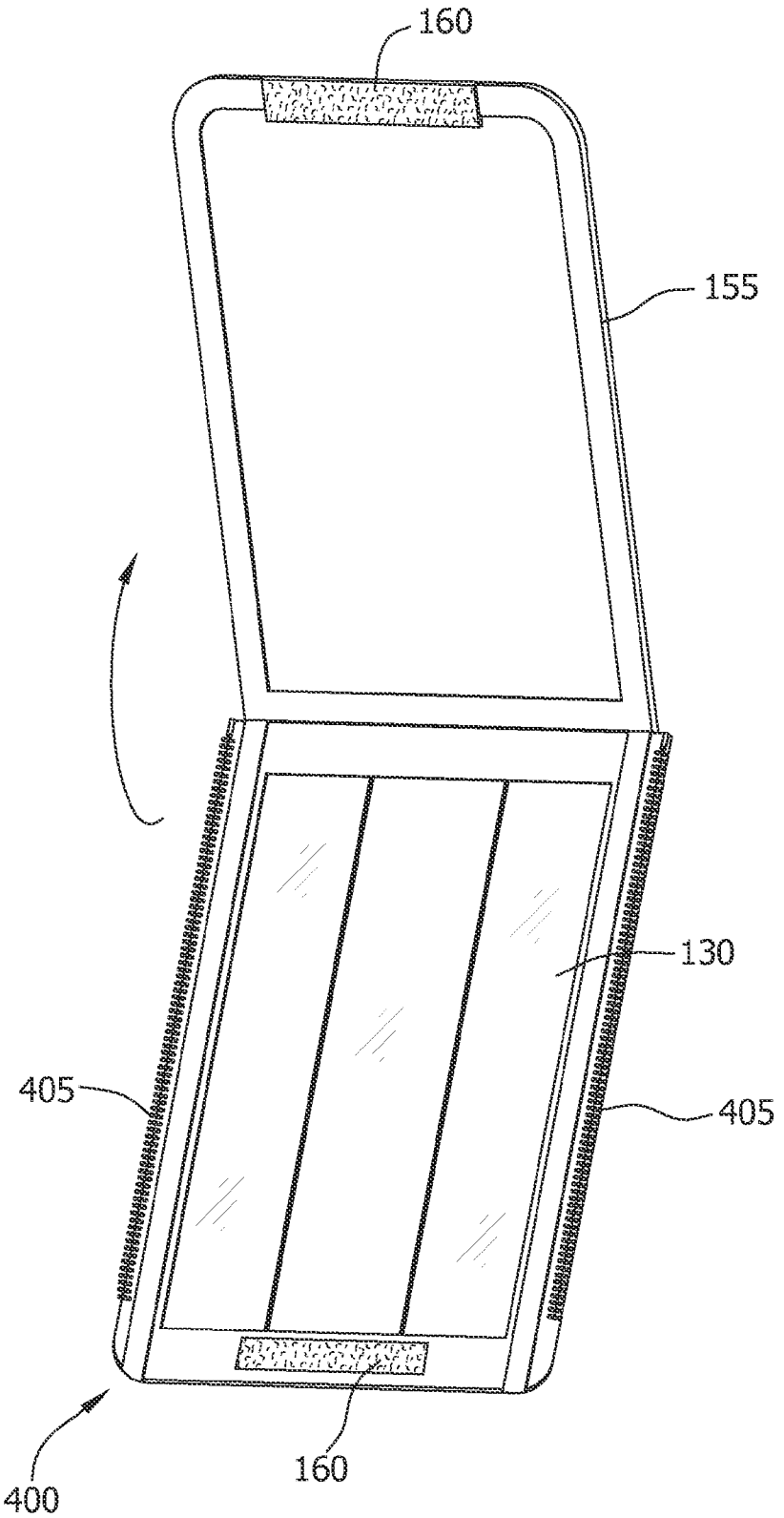

FIG. 8

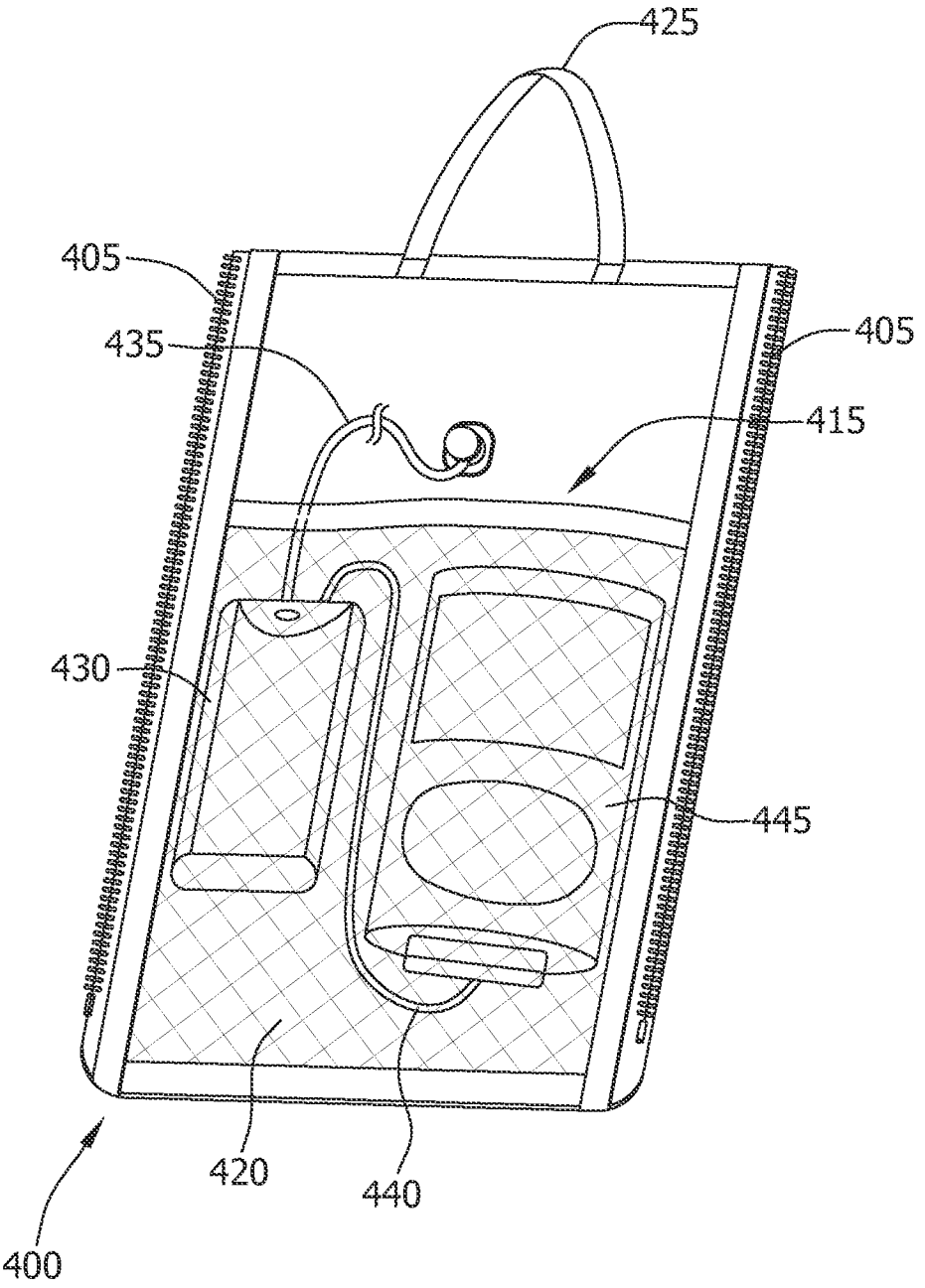

FIG. 9

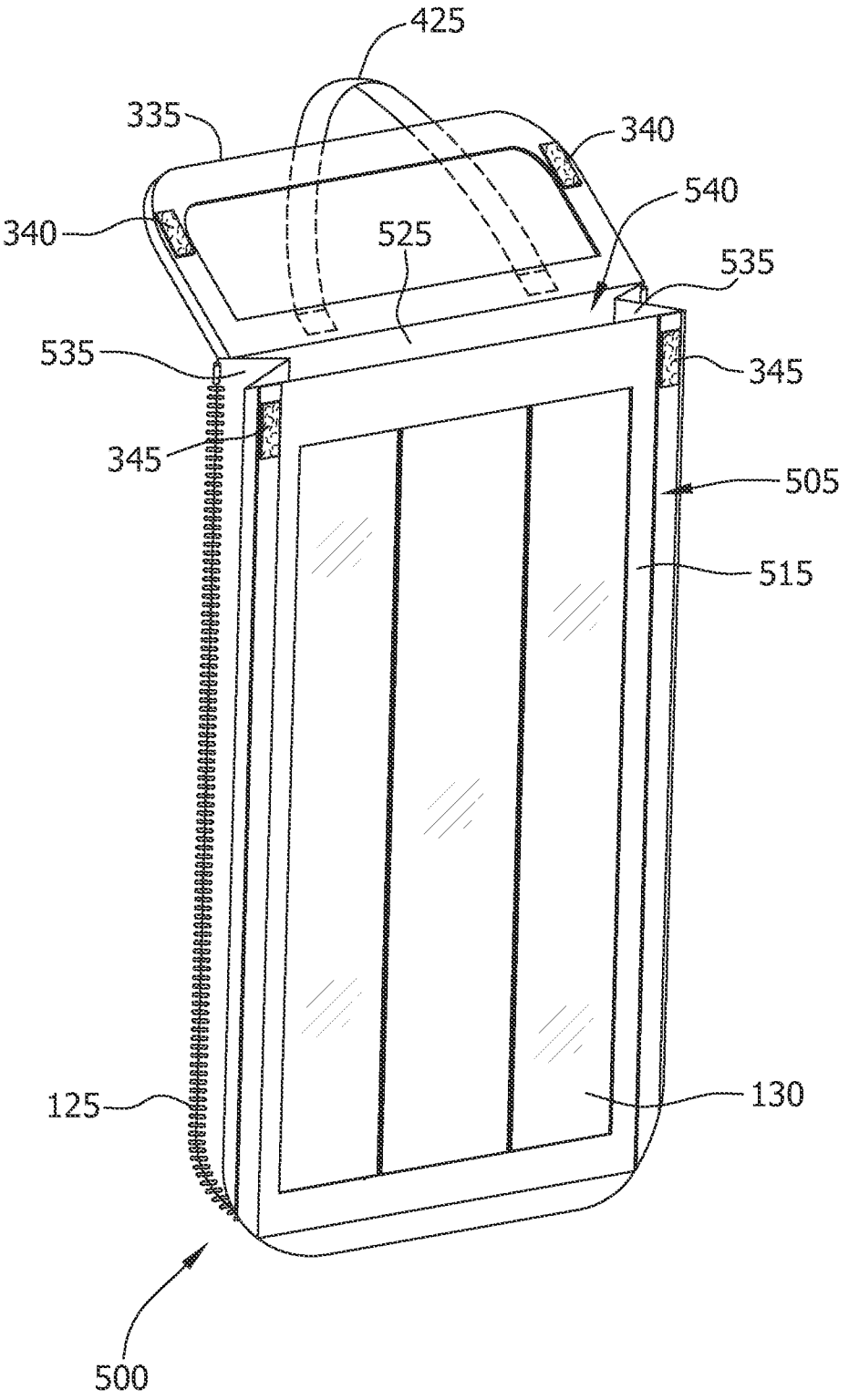

FIG. 10

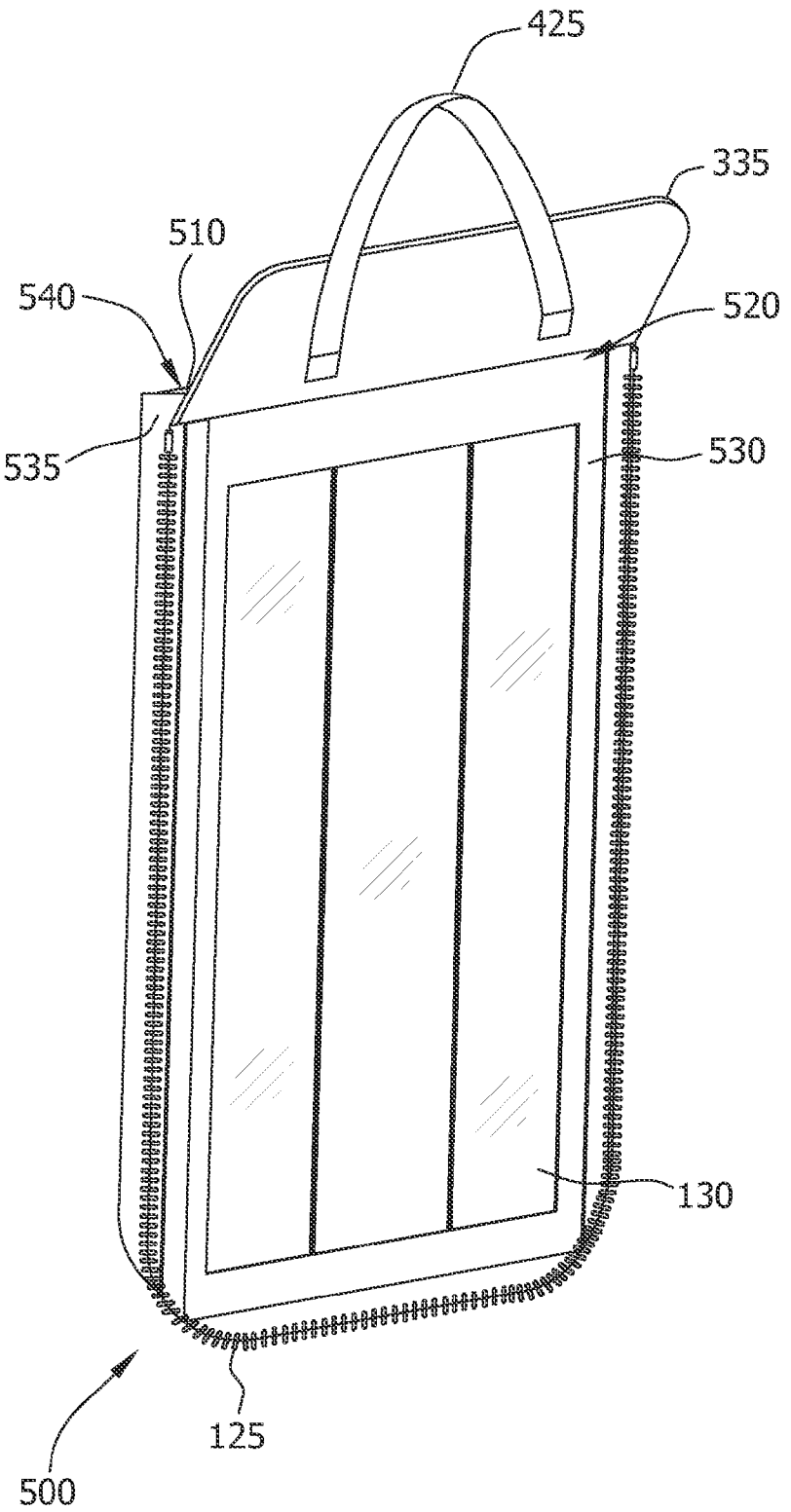

FIG. 11

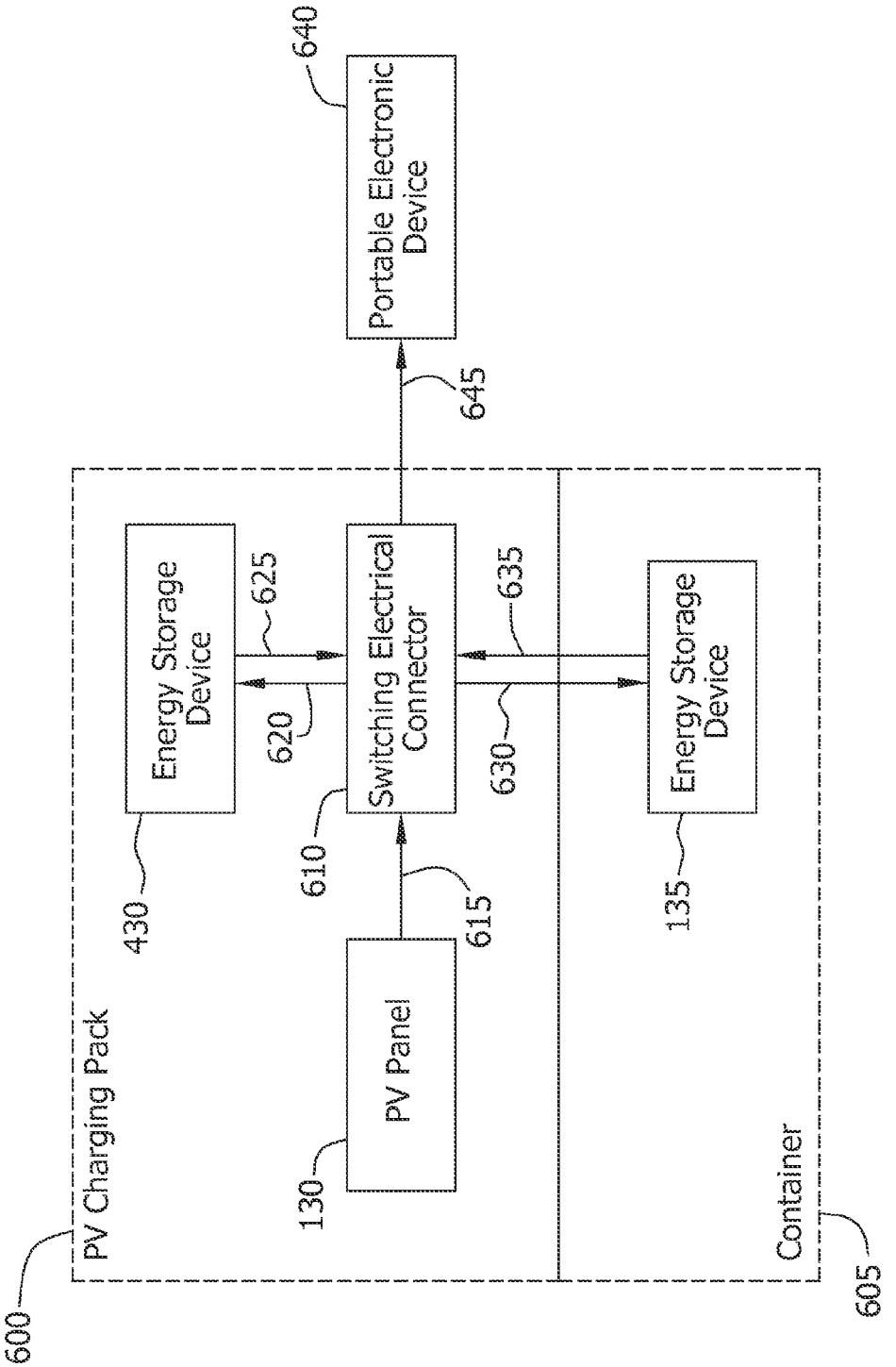
600
PV Charging Pack
430
Energy Storage Device
620
625
610
Switching Electrical Connector
630
635
615
PV Panel
130
645
640
Portable Electronic Device
135
Energy Storage Device
Container
605

CONTAINER AND REMOVABLE PHOTOVOLTAIC CHARGING PACK

CROSS-REFERENCE TO RELATED APPLICATIONS

[0001] This application is a divisional application of U.S. patent application Ser. No. 12/568,260, filed Sep. 28, 2009, which claims the benefit of U.S. Provisional Patent Application No. 61/270,691, filed 13 Jul. 2009, both of which are herein incorporated by reference in their respective entireties.

BACKGROUND OF THE INVENTION

[0002] The subject matter described herein relates generally to photovoltaic charging systems and, more particularly, to portable containers including photovoltaic cells.

[0003] Use of portable electronic devices is widespread and continues to grow. A portable electronic device requires electrical energy to function and, therefore, typically includes an energy storage device (e.g., a battery). During a period of high energy usage or an extended time away from a conventional energy source, an electronic device may deplete its energy storage device and become inoperable until connected to an energy source.

[0004] Existing photovoltaic charging systems provide a portable energy source for recharging an energy storage device of a portable electronic device. Further, some containers incorporate a photovoltaic charging system. However, a need exists for a self-contained photovoltaic charging pack that can be removably coupled to a carrying device.

BRIEF DESCRIPTION OF THE INVENTION

[0005] In one aspect, a photovoltaic (PV) charging pack is provided. The PV charging pack includes a PV panel, a compartment defined by the PV charging pack that is sized to contain a portable electronic device, a charging connector electrically coupled to the PV panel, and a mounting device for removably coupling the PV charging pack to a receiving device.

[0006] In another aspect, a portable container is provided. The portable container includes a body having an exterior surface and defining an interior compartment therein, and a PV charging pack including a PV panel, and a compartment sized to contain a portable electronic device therein. The PV charging pack is removably coupleable to the exterior surface, such that the PV panel is positioned to absorb light energy when the PV charging pack is coupled to the exterior surface.

BRIEF DESCRIPTION OF THE DRAWINGS

[0007] FIG. **1** is a perspective view of an exemplary portable container with a removably couplable PV charging pack.

[0008] FIG. **2** is a perspective view of the container shown in FIG. **1** with the PV charging pack coupled thereto.

[0009] FIG. **3** is a front view of an exemplary container including a plurality of receiving devices.

[0010] FIG. **4** is a perspective anterior view of the PV charging pack shown in FIGS. **1** and **2**.

[0011] FIG. **5** is a perspective posterior view of the PV charging pack shown in FIGS. **1** and **2**.

[0012] FIG. **6** is an perspective anterior view of an exemplary PV charging pack with a concealing flap in an engaged position.

[0013] FIG. **7** is an perspective anterior view of the PV charging pack shown in FIG. **6** with the concealing flap in a disengaged position.

[0014] FIG. **8** is a perspective posterior view of the PV charging pack shown in FIGS. **6** and **7**.

[0015] FIG. **9** is an perspective anterior view of an exemplary PV charging pack having two PV panels.

[0016] FIG. **10** is a perspective posterior view of the PV charging pack shown in FIG. **9**.

[0017] FIG. **11** is a block diagram of a switching electrical connector and other operable components within an exemplary PV charging pack and container.

DETAILED DESCRIPTION OF THE INVENTION

[0018] The embodiments described herein provide a photovoltaic (PV) charging pack for a portable electronic device. The charging pack includes a compartment for containing a portable electronic device and a photovoltaic (PV) panel for charging the device. The charging pack is removably coupled to a carrying device, such as a backpack or an article of clothing, such that the charging pack can be attached to and detached from the carrying device. The container may also include an energy storage device.

[0019] As used herein, the term PV panel is intended to indicate any substantially panel-shaped device for converting electromagnetic radiation approximately within the visible light and ultraviolet ranges ("light energy" herein) from the sun or any other suitable source into electrical energy. A PV panel may include one or more PV cells.

[0020] FIG. **1** is a perspective view of an exemplary portable container **100** with a removably couplable PV charging pack **105**. Container **100** may be any device for containing and transporting objects. For example, container **100** may include, without limitation, luggage, a golf bag, a waist pack, a computer case, a messenger bag, a briefcase, and/or a duffel bag. In FIG. **1**, container **100** is illustrated as a backpack.

[0021] Container **100** has an exterior surface **110** and defines an interior compartment **115**. Container **100** includes a PV charging pack receiving device **120** coupled to exterior surface **110** for detachably coupling PV charging pack **105** to exterior surface **110**. Receiving device **120** may be sewn to, riveted to, adhered to, molded with, embedded within, and/or otherwise coupled to exterior surface **110**.

[0022] In one embodiment, receiving device **120** includes a receiving compartment **122** with a substantially transparent panel **124**. PV charging pack **105** is positionable within receiving compartment **122**, and panel **124** is configured to allow light from outside panel **124** to reach PV charging pack **105**. PV charging pack **105** may or may not include a mounting device **170** (shown in FIG. **2**), as receiving compartment **122** is operable to retain PV charging pack **105**. Receiving device **120** may also include a receiving compartment closing device **125**, such as a flap, to facilitate securing PV charging pack **105** within receiving compartment **122** and/or to prevent environmental elements (e.g., rain and/or dirt) from entering receiving compartment **122**. In one embodiment, receiving compartment closing device **125** includes an attachment device **126**, and receiving device **120** and/or exterior surface **110** includes a complementary attachment device **128**. For example, attachment devices may include a hook-and-loop fastener, a zipper, a snap fastener, a clip fastener, a strap and a buckle, a strap and a loop, a button and a buttonhole, mutually attractive magnets, and/or a magnet and a ferromagnetic component.

[0023] PV charging pack **105** includes a PV panel **130**. PV charging pack **105** also defines a compartment **310** (shown in FIG. **5**) for containing a portable electronic device, such as a portable music player or a cellular phone. When PV charging pack **105** is coupled to receiving device **120**, PV panel **130** is configured or positioned to absorb light energy. In one embodiment, PV panel **130** faces away from exterior surface **110**.

[0024] In some embodiments, container **100** includes an energy storage device **135**. In one embodiment, container **100** also includes an energy input connector **140** for charging energy storage device **135** and an energy output connector **145** for powering and/or charging a device (e.g., a portable electronic device or another energy storage device) from energy storage device **135**. Energy input connector **140** and energy output connector **145** are electrically coupled to energy storage device **135**.

[0025] PV charging pack **105** includes a charging connector **150** for electrically coupling PV charging pack **105** to a portable electronic device **445** (shown in FIG. **8**) and/or to energy storage device **135** (e.g., via energy input connector **140**). Such embodiments facilitate charging energy storage device **135** from PV panel **130**. In addition, or alternatively, PV charging pack **105** may include an energy storage device **430** (shown in FIG. **8**).

[0026] In one embodiment, container **100** includes energy storage device **135** (e.g., a battery), and PV charging pack **105** includes another energy storage device. Charging connector **150** is electrically couplable to either energy storage device **135** or the energy storage device of PV charging pack **105**. In another embodiment, charging connector **150** is electrically couplable to energy storage device **135** (e.g., via energy input connector **140**), and container **100** includes energy output connector **145** for electrically coupling energy storage device **135** to the energy storage device of PV charging pack **105**. Such an embodiment facilitates charging the energy storage device of PV charging pack **105** by PV panel **130** and/or energy storage device **135**.

[0027] In one embodiment, charging connector **150** is electrically couplable to energy storage device **135** via energy input connector **140**, and energy storage device **135** is electrically couplable, via energy output connector **145**, to the energy storage device of PV charging pack **105**, which is electrically couplable to a portable electronic device via an additional charging connector (shown in FIG. **8**). Each of charging connector **150**, energy output connector **145**, and the additional charging connector may be compatible with the portable electronic device, in which case the portable electronic device is electrically couplable to any of the PV panel **130**, energy storage device **135**, and the energy storage device of PV charging pack **105**.

[0028] Electrical connectors such as charging connector **150**, energy input connector **140**, and energy output connector **145** may include, without limitation, cables with one or more Universal Serial Bus (USB) connectors (e.g., a plug or a receptacle), such as a USB Type A, USB Type B, USB Mini-A, USB Mini-B, USB Micro-AB, and/or USB Micro-B connector. Energy storage device **135** and the energy storage device of PV charging pack **105** may include, without limitation, a battery, a capacitor, a fuel cell, and/or any suitable device operable to absorb electrical energy, store the energy in electrical form or another form, and discharge the stored energy as electrical energy.

[0029] FIG. **2** is a perspective view of container **100** with PV charging pack **105** coupled to exterior surface **110**. Coupling PV charging pack **105** to container **100** facilitates transportation of PV charging pack **105** and the contents thereof with PV panel **130** exposed, further facilitating charging of a portable electronic device.

[0030] In an exemplary embodiment, PV charging pack **105** includes a mounting device **170** for removably coupling PV charging pack **105** to container **100**. In one embodiment, mounting device **170** is removably couplable to receiving device **120**.

[0031] In some embodiments, mounting device **170** and receiving device **120** include complementary fasteners. In an exemplary embodiment, receiving device **120** and mounting device **170** are zippers **175** and **180**, respectively, and zipper **175** includes a slider **185** for coupling zipper **175** to zipper **180**. Other complementary fasteners include, but are not limited to, a hook-and-loop fastener, a snap fastener, a clip fastener, a strap and a loop, a strap and a buckle, a button and a buttonhole, mutually attractive magnets, a magnet and a ferromagnetic component, and/or a hook and a ring or loop.

[0032] In some embodiments, a concealing flap **155** is provided for covering PV panel **130**. For example, concealing flap **155** may be coupled to PV charging pack **105**, such that concealing flap **155** is operable to cover PV panel **130** regardless of whether PV charging pack **105** is coupled to container **100**. Alternatively, concealing flap **155** may be coupled to container **100** such that concealing flap **155** is operable to cover PV panel **130** when PV charging pack **105** is coupled to container **100**. In one embodiment, concealing flap **155** is sized to cover substantially all of charging pack **105** and/or receiving device **120**. Concealing flap **155** may be secured in an engaged position by one or more fasteners **160**, such as a hook-and-loop fastener.

[0033] Concealing flap **155** may be substantially opaque. In one embodiment, concealing flap **155** comprises a material substantially identical to a material from which exterior surface **110** is made. For example, the concealing flap and exterior surface **110** may have a substantially identical color and/or graphical pattern (e.g., a camouflage pattern). In an exemplary embodiment, concealing flap **155** is flexible and may be rolled, folded, and/or disposed between charging pack **105** and exterior surface **110** to facilitate exposure of PV panel **130** to light energy.

[0034] FIG. **3** is a front view of an exemplary container **200** including a first receiving device **205** and a second receiving device **210**. Each of receiving devices **205** and **210** is detachably couplable to a PV charging pack such as PV charging pack **105**. While two receiving devices **205** and **210** are shown in FIG. **3**, container **200** may include any number of receiving devices.

[0035] In one embodiment, container **200** includes energy storage device **135**. Container **200** also includes a first energy input connector **215** and a first energy output connector **220** for electrically coupling energy storage device **135** to a first PV charging pack coupled to first receiving device **205**. Container **200** also includes a second energy input connector **225** and a second energy output connector **230** for electrically coupling energy storage device **135** to a second PV charging pack coupled to second receiving device **210**. Such an embodiment facilitates charging energy storage device **135** simultaneously from multiple PV panels and powering and/or charging multiple portable electronic devices and/or energy storage devices simultaneously from energy storage device

135. Such an embodiment further facilitates using electrical energy from a PV panel and/or energy storage device of one PV charging pack to charge a portable electronic device and/or energy storage device of another PV charging pack.

[0036] FIG. 4 is a perspective anterior view of PV charging pack 105. PV charging pack 105 includes PV panel 130 coupled to a first surface 300 and includes mounting device 170 for removably coupling PV charging pack 105 to a receiving device such as receiving device 120. In the exemplary embodiment, mounting device 170 is a zipper. However, mounting device 170 may be any device operable to removably couple PV charging pack 105 to a receiving device. For example, mounting device 170 may include, but is not limited to, a hook-and-loop fastener, a snap fastener, a clip fastener, a strap, a loop or ring, a buckle, a buttonhole, a magnet, and/or a hook. In some embodiments, mounting device 170 is a device for removably coupling PV charging pack 105 to an article of clothing (e.g., a shirt or a jacket) or a clothing accessory (e.g., a hat or a helmet). Mounting device 170 may be operable to couple PV charging pack 105 to a receiving device and to one or more other structures. For example, a magnet may be operable to couple PV charging pack 105 to a container with a corresponding magnet and to a ferromagnetic surface.

[0037] FIG. 5 is a perspective posterior view of PV charging pack 105. PV charging pack 105 defines, on a second surface 305, a compartment 310 for containing a portable electronic device. In the exemplary embodiment, a panel 315 defines compartment 310 and an opening 320 to receive a portable electronic device. PV charging pack 105 also includes a charging connector 150 electrically coupled to the PV panel 130. Charging connector 150 is electrically couplable to a portable electronic device and/or an energy storage device. When coupled to such a device, charging connector 150 transfers energy from PV panel 130 to the coupled device.

[0038] In some embodiments, PV charging pack 105 includes a voltage regulator 325 configured to electrically couple PV panel 130 to charging connector 150. Voltage regulator 325 may include a step-up transformer and/or a step-down transformer. Voltage regulator 325 is operable to maintain a substantially constant voltage output at charging connector 150 and/or to produce a desired voltage at charging connector 150 when one or more PV panels 130 of PV charging pack 105 produce a voltage that is lower or higher than the desired voltage.

[0039] PV charging pack 105 may also include an armband 330 coupled to PV charging pack 105, such as to second surface 305. When PV charging pack 105 is worn on an arm, PV panel 130 is configured to absorb light energy, facilitating charging of a portable electronic device contained in compartment 310. In one embodiment, PV panel 130 faces away from the arm.

[0040] In some embodiments, PV charging pack 105 includes a compartment closing device 335. Compartment closing device 335 facilitates securing objects, such as a portable electronic device, in compartment 310 and/or preventing environmental elements (e.g., rain and/or dirt) from entering compartment 310. In an exemplary embodiment, compartment closing device 335 is a compartment flap including an attachment device 340, and PV charging pack 105 includes a complementary attachment device 345. For example, attachment devices 340 and 345 may include a hook-and-loop fastener, a zipper, a snap fastener, a clip fastener, a strap and a buckle, a strap and a loop, a button and a buttonhole, mutually attractive magnets, and/or a magnet and a ferromagnetic component.

[0041] In some embodiments, PV charging pack mounting device 170 is a first mounting device for removably coupling PV charging pack 105 to a receiving device of a carrying device. PV charging pack 105 may also include one or more additional mounting devices 350 for removably coupling PV charging pack 105 to a surface (not shown). Additional mounting devices 350 may include, but are not limited to, a magnet, a suction cup, and/or a hook-and-loop fastener. For example, one or more magnets may be used to removably couple PV charging pack 105 to a ferromagnetic surface, such as a steel panel of a vehicle.

[0042] FIG. 6 is an perspective anterior view of an exemplary PV charging pack 400 with a concealing flap 155 in an engaged position. In the engaged position, concealing flap 155 substantially covers a PV panel (shown in FIG. 7), facilitating physical and/or visual shielding of the PV panel. PV charging pack 400 includes two zippers 405 as mounting devices.

[0043] FIG. 7 is an perspective anterior view of PV charging pack 400 with concealing flap 155 in a disengaged position. PV charging pack 400 includes concealing flap fasteners 160 for detachably securing concealing flap 155 in an engaged position. Concealing flap fasteners 160 may include a zipper, a hook-and-loop fastener, a snap fastener, a clip fastener, mutually attractive magnets, a magnet and a ferromagnetic component, a hook and a ring or loop, and/or any fastener operable to detachably secure concealing flap 155 in an engaged position. In FIG. 7, concealing flap fasteners 160 are illustrated as hook-and-loop fasteners.

[0044] With concealing flap 155 in a disengaged position, PV panel 130 is exposed, facilitating conversion of light into electrical energy. Concealing flap 155 may be substantially flexible, substantially rigid, or a combination of substantially flexible and substantially rigid.

[0045] FIG. 8 is a perspective posterior view of PV charging pack 400. PV charging pack 400 includes a mesh panel 410 defining an opening 415 to a compartment 420. PV charging pack 400 also includes a first charging connector 435 for electrically coupling PV panel 130 to an energy storage device 430, which is disposable within compartment 420. A second charging connector 440, also disposable within compartment 420, is included for electrically coupling energy storage device 430 to a portable electronic device. In an exemplary embodiment, second charging connector 440 is further operable to couple a portable electronic device to a computer port, such as a USB port.

[0046] In one embodiment, PV charging pack 400 includes a hanging device 425 for hanging PV charging pack 400 from any suitable structure. For example, PV charging pack 400 may be hung from a tree limb with PV panel 130 exposed to sunlight to facilitate charging of energy storage device 430 and/or a portable electronic device.

[0047] FIGS. 9 and 10 are complementary perspective views of an exemplary PV charging pack 500. Specifically, FIG. 9 illustrates an anterior view of PV charging pack 500, and FIG. 10 illustrates a posterior view of PV charging pack 500. PV charging pack 500 includes a first structural panel 505 having a first interior surface 510 and a first exterior surface 515. PV charging pack 500 also includes a second structural panel 520, opposite first structural panel 505, having a second interior surface 525 and a second exterior surface

530. Exterior surface 515 and/or exterior surface 530 include a PV panel 130. Structural panels 505 and 520 are arranged so that first interior surface 510 faces second interior surface 525. First structural panel 505 may be coupled to second structural panel 520 via one or more joining panels 535. For example, a joining panel 535 may be a folded panel that expands by unfolding and/or an elastic panel that expands by stretching.

[0048] In an exemplary embodiment, a compartment 540 is defined between first interior surface 510 and second interior surface 525, and PV charging pack 500 also includes compartment closing device 335 and attachment devices 340 and 345. Hanging device 425 is coupled to compartment closing device 335. Alternatively, hanging device 425 may be coupled to second exterior surface 530.

[0049] Because PV charging pack 500 includes a PV panel 130 on both exterior surfaces 515 and 530, PV charging pack 500 facilitates charging a portable electronic device and/or an energy storage device while PV charging pack 500 is suspended by hanging device 425. For example, PV charging pack 500 may be hung from a hook or a tree limb and allowed to swivel in response to wind. In this configuration, regardless of the orientation of PV charging pack 500, at least one of PV panels 130 is likely to face a source of direct or reflected light energy.

[0050] In one embodiment, first structural panel 505 and second structural panel 520 are detachably coupled to each other, in part or in whole. For example, one or more joining panels 535 may include a fastener, such as a zipper, for detachably coupling structural panels 505 and 520. Structural panels 505 and 520 may be partly permanently coupled (e.g., via a hinge), with a conductor electrically coupling PV panels 130.

[0051] Other embodiments with multiple, detachably coupled PV panels 130 are also contemplated. Such embodiments facilitate configuring (e.g., by unfolding) PV panels 130 for substantially optimal light collection. For example, a plurality of PV panels 130 may be arranged to face a source of light, and the plurality of panels may be detachably coupled to a surface, such as a steel panel, by a mounting device, such as a magnet.

[0052] FIG. 11 is a block diagram of a switching electrical connector 610 and other operable components within an exemplary PV charging pack 600 and a container 605. PV charging pack 600 includes at least one PV panel 130, PV charging pack energy storage device 430, and switching electrical connector 610. Container 605 includes energy storage device 135. Arrows in FIG. 11 indicate electrical energy transmission between the illustrated components.

[0053] Switching electrical connector 610 is electrically coupled to PV panel 130 via a PV panel connector 615. Switching electrical connector 610 is electrically couplable to energy storage device 430 via a first charging connector 620 and a first extraction connector 625. Switching electrical connector 610 is electrically couplable to energy storage device 135 via a second charging connector 630 and a second extraction connector 635. Switching electrical connector 610 is also electrically couplable to a portable electronic device 640 via a device connector 645. First charging connector 620 and first extraction connector 625 may be combined into a single physical connector with conductors for transmitting energy in each direction. First connectors 620 and 625 may instead be combined into a single, bidirectional connector capable of transmitting energy in either direction. Second charging connector 630 and second extraction connector 635 may be combined as described with regard to first connectors 620 and 625.

[0054] In the exemplary embodiment, switching electrical connector 610 is configured to detect which of energy storage device 430, energy storage device 135, and portable electronic device 640 are electrically coupled to switching electrical connector 610. Switching electrical connector 610 is also configured to electrically couple the other components 130, 630, 135, and 640 based on which components are coupled to switching electrical connector 610 and/or based on an operational state of the components.

[0055] For example, switching electrical connector 610 is configured to electrically couple a power source (i.e., PV panel 130, energy storage device 430, or energy storage device 135) to portable electronic device 640. For example, if energy storage device 430 and energy storage device 135 are not coupled to switching electrical connector 610, switching electrical connector 610 electrically couples PV panel 130 to portable electronic device 640. In one embodiment, if energy storage device 430 is coupled to switching electrical connector 610, switching electrical connector 610 electrically couples PV panel 130 to energy storage device 430 by electrically coupling PV panel connector 615 to first charging connector 620. Switching electrical connector 610 also electrically couples energy storage device 430 to portable electronic device 640 by electrically coupling first extraction connector 625 to device charging connector 645.

[0056] Switching electrical connector 610 may detect an operation state of a component 130, 430, 135, and/or 640. For example, switching electrical connector may determine a charge level of energy storage device 430, energy storage device 135, and/or portable electronic device 640. In one embodiment, switching electrical connector 610 is configured to optimize energy distribution for powering portable electronic device 640 when PV charging pack 600 is decoupled from container 605. Specifically, switching electrical connector 610 may be configured to electrically couple PV panel 130 to energy storage device 430 via PV panel connector 615 and first charging connector 620 until energy storage device 430 substantially reaches a maximum charge level. Switching electrical connector 610 may, simultaneously, couple energy storage device 430 to portable electronic device 640 via first extraction connector 625 and device charging connector 645. In such a configuration, energy storage device 430 receives energy from PV panel 130 and discharges energy to portable electronic device 640; energy storage device 430 may thus reach a maximum charge level only when both energy storage device 430 and portable electronic device 640 reach a maximum charge level.

[0057] When energy storage device substantially reaches a maximum charge level, switching electrical connector 610 decouples energy storage device 430 from PV panel 130 and electrically couples PV panel 130 to energy storage device 135 via PV panel connector 615 and second charging connector 630. In some embodiments, switching electrical connector 610 is configured to electrically couple energy storage device 135 to energy storage device 430 by electrically coupling second extraction connector 635 to first charging connector 620, thereby facilitating charging of energy storage device 430 from energy storage device 135. Switching electrical connector 610 may electrically couple PV panel 130 and energy storage device 135 to energy storage device 430 simultaneously.

[0058] Switching electrical connector **610** facilitates simplified connection of portable electronic device **640** to PV panel **130**, energy storage device **430**, and energy storage device **135** by providing a single connector in the form of device connector **645**, regardless of which other components are present. Switching electrical connector **610** further facilitates optimization of energy transmission to ensure energy is available for portable electronic device **640** when PV charging pack **600** is decoupled from container **605** and, consequently, decoupled from energy storage device **135**.

[0059] Exemplary embodiments of a PV charging pack and a container are described above in detail. The PV charging pack, container, and included assemblies are not limited to the specific embodiments described herein, but, rather, each component may be utilized independently and separately from other components described herein.

[0060] This written description uses examples to disclose the invention, including the best mode, and also to enable any person skilled in the art to practice the invention, including making and using any devices or systems and performing any incorporated methods. The patentable scope of the invention is defined by the claims, and may include other examples that occur to those skilled in the art. Such other examples are intended to be within the scope of the claims if they have structural elements that do not differ from the literal language of the claims, or if they include equivalent structural elements with insubstantial differences from the literal language of the claims.

1-8. (canceled)

9. A portable photovoltaic (PV) charging pack comprising:
- at least one PV panel;
- a compartment defined by the PV charging pack for containing a portable electronic device;
- a charging connector electrically coupled to the at least one PV panel; and
- a mounting device for removably coupling the PV charging pack to a receiving device.

10. The PV charging pack of claim **9**, wherein the charging connector is a first charging connector, the PV charging pack further comprising:
- an energy storage device coupled to the charging connector; and
- a second charging connector electrically couplable to the energy storage device and a portable electronic device.

11. The PV charging pack of claim **10**, wherein the energy storage device is disposable within the compartment.

12. The PV charging pack of claim **9**, further comprising a voltage regulator configured to electrically couple the PV panel to the charging connector.

13. The PV charging pack of claim **9**, wherein the PV panel is coupled to a first surface of the PV charging pack and the compartment is defined on a second surface of the PV charging pack.

14. The PV charging pack of claim **13**, further comprising a panel coupled to the PV charging pack to define the compartment on the second surface, the panel further defining an opening to receive the portable electronic device.

15. The PV charging pack of claim **9**, wherein the at least one PV panel is a first PV panel, the PV charging pack further comprising:
- a first structural panel having a first interior surface and a first exterior surface, the first exterior surface comprising the first PV panel; and
- a second structural panel, opposite the first structural panel, having a second interior surface and a second exterior surface, the second exterior surface comprising a second PV panel,
- wherein the first interior surface faces the second interior surface.

16. The PV charging pack of claim **15**, wherein the compartment is defined between the first interior surface and the second interior surface.

17. The PV charging pack of claim **16**, further comprising a hanging device.

18. The PV charging pack of claim **9**, wherein the mounting device is a first mounting device for removably coupling the PV charging pack to a receiving device of a carrying device, the PV charging pack further comprising a second mounting device for removably coupling the PV charging pack to a surface, the second mounting device comprising one or more of the following: a magnet, a suction cup, and a hook-and-loop fastener.

19. The PV charging pack of claim **9**, further comprising an armband.

20. The PV charging pack of claim **9**, wherein the mounting device comprises a device for removably coupling the PV charging pack to an article of clothing or a clothing accessory.

21. A portable container comprising:
- a body having an exterior surface and defining an interior compartment therein; and
- a photovoltaic (PV) charging pack comprising a PV panel, and a compartment configured to contain a portable electronic device, said PV charging pack removably coupleable to the exterior surface, such that the PV panel is positioned to absorb light energy when the PV charging pack is coupled to the exterior surface.

22. The portable container of claim **21**, wherein the PV charging pack further comprises a concealing flap for covering the PV panel.

23. The portable container of claim **21**, wherein the PV charging pack further comprises an armband.

24. The portable container of claim **21**, wherein the PV charging pack further comprises an energy storage device, and a charging connector configured to electrically couple the PV panel to the energy storage device.

25. The portable container of claim **21**, wherein the PV charging pack further comprises a voltage regulator, and a charging connector configured to electrically couple the PV panel to the voltage regulator.

26. The portable container of claim **21**, wherein the PV panel is positioned on a first surface of the PV charging pack, and the compartment is positioned on a second surface of the PV charging pack.

27. The portable container of claim **21**, wherein the PV charging pack further comprises a hanging device.

28. The portable container of claim **21**, wherein the PV charging pack further comprises a mounting device configured to removably couple the PV charging pack to an article of clothing or a clothing accessory.

* * * * *