No. 743,455. PATENTED NOV. 10, 1903.

A. M. COMSTOCK.

HAND STAMP.

APPLICATION FILED FEB. 17, 1903.

NO MODEL. 2 SHEETS—SHEET 1.

Fig. 1.

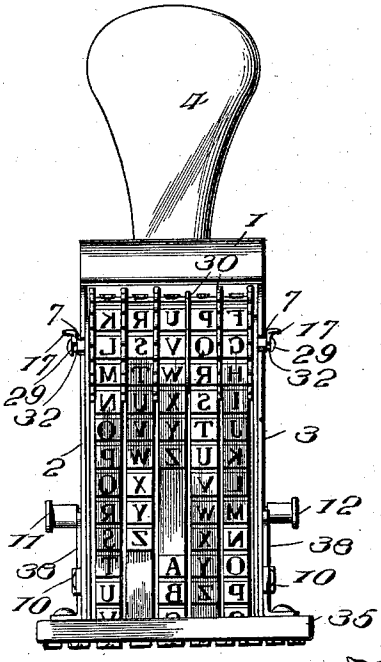

Fig. 2.

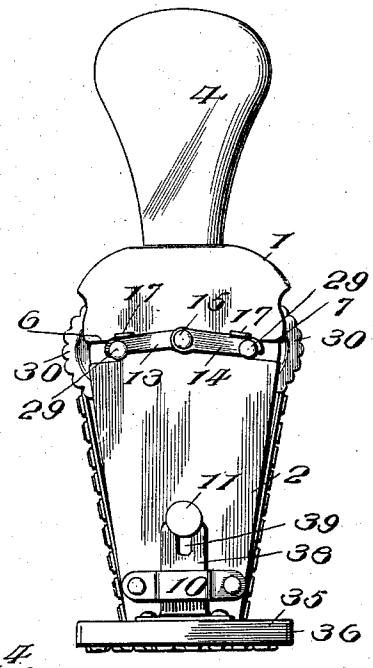

Fig. 3.

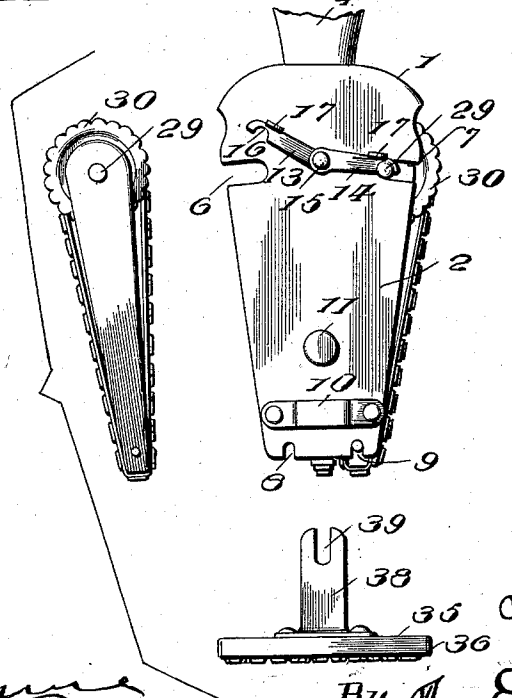

Witnesses

Jno. Munn

Stewart Rice

Inventor

Asa. M. Comstock

By Thos. E. Robertson

Attorney

THE NORRIS PETERS CO., PHOTO-LITHO., WASHINGTON, D. C.

No. 743,455. PATENTED NOV. 10, 1903.

A. M. COMSTOCK.

HAND STAMP.

APPLICATION FILED FEB. 17, 1903.

NO MODEL. 2 SHEETS—SHEET 2.

Fig. 5.

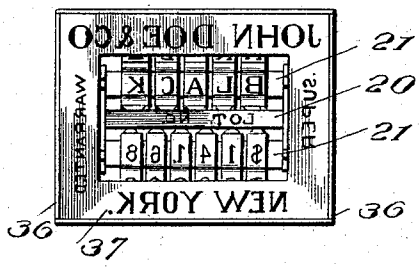

Fig. 4.

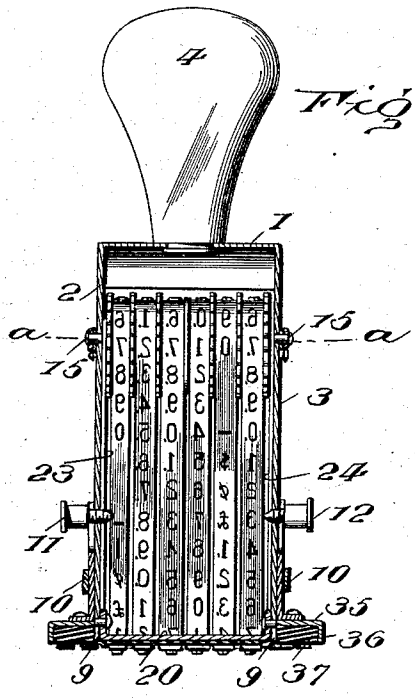

Fig. 6.

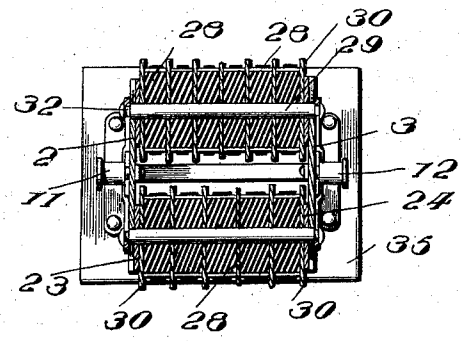

Fig. 7.

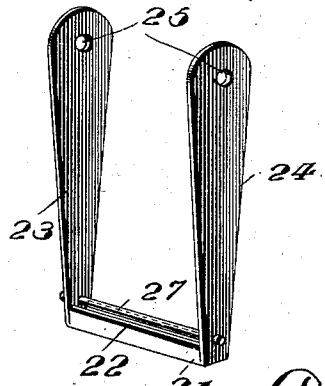

Witnesses

J. Stewart Rice

Inventor

Asa M. Comstock

By Thos. E. Robertson

Attorney

THE NORRIS PETERS CO., PHOTO-LITHO., WASHINGTON, D. C.

No. 743,455. Patented November 10, 1903.

UNITED STATES PATENT OFFICE.

ASA MERRITT COMSTOCK, OF CHICAGO, ILLINOIS, ASSIGNOR TO INDEPENDENT MANUFACTURING COMPANY, OF CHICAGO, ILLINOIS, A CORPORATION OF ILLINOIS.

HAND-STAMP.

SPECIFICATION forming part of Letters Patent No. 743,455, dated November 10, 1903.

Application filed February 17, 1903. Serial No. 143,826. (No model.)

To all whom it may concern:

Be it known that I, ASA MERRITT COMSTOCK, a citizen of the United States of America, and a resident of Chicago, Cook county, Illinois, have invented certain new and useful Improvements in Hand-Stamps, of which the following is a specification.

This invention relates to improvements in hand-stamps of that character in which a series of bands are used on which are formed printing characters—such, for example, as letters, figures, &c.—and the present invention relates to a stamp of that character in which the bands can be easily removed from the stamp, if desired.

My invention also contemplates a hand-stamp in which a plurality of bands are removably supported on each side of the frame, and in the embodiment shown in the accompanying drawings the bands from each side may be removed independently of the other and the stamp be used to print with either or both.

Other improvements will be also more particularly described later.

My invention therefore consists in the stamp as shown in its preferable embodiment in the accompanying drawings and as will now be hereinafter more particularly described and then definitely set forth in the claims at the end hereof.

In the drawings accompanying and forming part of this application, Figure 1 is a front elevation of a stamp made in accordance with my improvement. Fig. 2 is a side elevation of the same. Fig. 3 is a group of figures representing the die-plate and one of the sets of bands as being removed. Fig. 4 is a vertical central section. Fig. 5 is a bottom plan view. Fig. 6 is a horizontal section taken through the line *a a* of Fig. 4. Fig. 7 is a detached perspective view of part of one of the frames adapted to support the type-drums.

Referring now to the details of the drawings by numerals, 1 designates the main frame, which is preferably though not necessarily formed with the usual side plates 2 and 3, to which is secured the usual handle 4, all of which may be of the usual form or construction; but I desire it to be understood that my invention is not limited to the style of this frame nor to a stamp of the character shown in the drawings, but refer to the appended claims to point out the scope of my invention.

When a frame is used having side plates 2 and 3, each of said plates is provided with two slots 6 and 7, near the upper end of the frame, as is very clearly shown in Figs. 2 and 3. The lower ends of each of these side plates 2 and 3 are also provided with two notches 8 and 9, as shown in Fig. 3, and above these notches is secured by riveting or otherwise straps 10, and above these straps are thumb-screws 11 and 12 for purposes to be hereinafter described. Another feature of novelty in this main frame 1 is a locking device comprising two latches 13 and 14, which are pivoted to the sides 2 and 3 at 15 and whose outer ends are notched at 16, so as to swing down over the slots 6 and 7, as seen in Fig. 2. These latches 13 and 14 are provided with ears 17, which act as handles by which the latches may be moved on their pivots 15 when necessary; but I do not limit all of my claims to the form of these latches, and, in fact, the latches themselves may be dispensed with and other means used. The only other feature of novelty regarding this main frame 1 is a brace 20, connecting the side plates 2 and 3, and which plate also acts to support part of the permanent inscription, as shown in Fig. 5.

My hand-stamp, as shown in Fig. 2, comprises two sets of bands, one of which is provided with letters and the other with numbers, and these sets of bands are arranged to be easily moved out of the stamp-frame, as shown in Fig. 3, and I will now proceed to describe my preferred form of frame for supporting these bands and by which they may be bodily removed without their separating or falling to pieces. By referring to Fig. 7 there will be seen a frame comprising a horizontal part forming a type-bridge 21 with turned-up edges 22, and formed integral with this type-base are two upwardly-extending side arms 23 and 24, which are both perforated, as shown at 25. A spindle or rod 27 passes through

these side bars 23 and 24 near their lower ends and forms part of the means for connecting the frame to the stamp proper, as will be described. By referring to Figs. 4 and 6 it will be observed that a number of type-drums 28 are inserted between the side arms 23 and 24 and held therein by axle-pins 29, whose ends pass through the perforations 25 in the side arms 23 and 24, as clearly shown. The adjustable bands on these drums pass over and around the type-base 21, as clearly seen in the drawings. It follows from this construction that the type-drums may be easily rotated and the position of the characters changed by grasping the flanges 30 of the drums 28 and turning the latter, as will be clearly understood by those using or having knowledge of stamps of this character. The axle-pins 29, which have been described as securing the drums 28 between the side arms 23 and 24, are provided with annular grooves 32 in their ends, as clearly seen in Figs. 1 and 6.

By referring to Fig. 3 it will be seen that the frames carrying the type-drums and type-bands may be easily inserted in the main frame of the stamp by first inserting the ends of the spindle 27 in the slots 8 at the lower ends of the side bars 2 and 3, and then the side arms 23 and 24 may be swung on the spindle 27 as a pivot until its axle-pin 29 passes into its slots 6, when the pivoted latches 13 may be moved downward, so that the notched ends 16 engage the grooves 32 in the axle-pin, and thereby lock them in position. Of course the removal is effected by the reversal of this operation, and it will be obvious that the stamp as now described may be used with one set of type-bands or with two, as desired, and that owing to the easy attachment of the parts a set of bands can be easily removed and a different set substituted in lieu thereof. Of course it is evident that the bands and their frames may be first secured at the top, if desired, and the latches be used at the bottom.

In order to provide a die or inscription plate for this stamp which may be easily removed in order to permit the removal of the type-bands, as just described, I employ a die-plate which consists of a sheet-metal frame 35 with downturned flanges 36, adapted to contain a cushion of sponge-rubber or other material 37, as seen in Fig. 4. The die-plate so far described is old; but I employ in connection therewith two side arms 38, slotted at their upper ends 39, and which side arms are adapted to pass under the straps 10, hereinbefore described, and be secured in their proper adjustable positions by means of the hand-screws 12, also before described. It will be obvious from my drawings that this die-plate, as shown in Fig. 2, can be easily removed by merely loosening the thumb-screws 12 and pulling the die-plate off of the stamp, in which event the type-drums can be easily removed as desired. Of course the die-plate can be easily replaced and when replaced can be adjusted so that the printing characters on the die-plate may be in exactly the same plane with the printing characters on the bands by merely adjusting the parts and securing them by the thumb-screws 12. It is obvious that the die-plate may be immovable, if desired, and the detachable frames inserted through the slots in the same and secured at their upper ends, and these and other changes and modifications I deem within the spirit of my invention.

I believe my stamp has been described with sufficient clearness of detail to impart a clear understanding of its operation and that further description of the same will therefore be unnecessary.

As hereinbefore said, I do not intend to limit my claims to the exact stamp herein shown and described nor to a stamp having two sets of printing characters, but refer to the appended claims to distinctly point out the novel points of my new stamp.

What I claim as new is—

1. In a hand-stamp, a frame having slots in its sides, and a second frame detachably inserted in said first-mentioned frame, and having projecting portions entering said slotted sides whereby said second frame may be easily removed; the aforesaid slots in said first-mentioned frame opening in a line substantially at right angles to the length of said frames; substantially as described.

2. In a hand-stamp, a frame provided with a handle and having open-ended slots in its sides, a second frame detachably inserted in said first-mentioned frame and having projecting portions entering said slots, and means coacting with said projecting portions for locking them in said slotted sides; whereby said second-mentioned frame may be easily secured in position or removed; substantially as described.

3. In a hand-stamp, a frame provided with a handle and having slotted sides and a second frame supporting the printing characters and provided with an axle-pin having its ends passing into the slots of said sides; the said slots having open ends whereby the axle-pin of the second frame may be easily removed, substantially as described.

4. In a hand-stamp, a main frame provided with a handle and having an open-ended slot, a type-supporting frame carried thereby and having a projecting portion passing into the open-ended slot and thus providing a means for the easy attachment and detachment of said type-supporting frame, and means coacting with said projecting portion to hold it in its slot, substantially as described.

5. In a hand-stamp, a frame having slotted side arms, a second frame carrying printing characters and having an axle-pin passing into the slots of said side arms, and latches supported by said side arms and locking the

axle-pin in position, substantially as described.

6. In a hand-stamp, a frame having side arms having slots near one end thereof and notches near the other end thereof, in combination with a removable frame carrying printing characters and having projections at one end fitting into the notches of the side arms and an axle-pin passing into the slots of said side arms, substantially as described.

7. In a hand-stamp, a frame having side arms having slots near one end thereof and notches near the other end thereof, in combination with a removable frame carrying printing characters and having projections at one end fitting into the notches of the side arms and an axle-pin passing into the slots of said side arms, and latches carried by said side arms and coacting with said axle-pin to hold the same in position, substantially as described.

8. In a hand-stamp, a frame having side arms or parts, said side arms or parts carrying two independent frames and two series of printing characters; the frames supporting said characters being substantially parallel with each other; substantially as described.

9. In a hand-stamp, a frame having side arms or parts, said side arms or parts carrying two independent series of detachably-secured frames and two series of printing characters; the said frames being substantially parallel with each other, substantially as described.

10. In a hand-stamp, a frame having side arms with slots on each side thereof; in combination with frames carrying printing characters, one of said frames being located on each side of the stamp and said frames having axle-pins passing into the slots of said side arms, substantially as described.

11. In a hand-stamp, a frame having side arms with slots at each side of the upper portion thereof and two sets of notches at the lower ends thereof; in combination with two frames carrying printing characters, said frames inserted between said side arms and each frame having projections near its lower end fitting in the notches of the side arms and axle-pins near the upper ends thereof fitting in the slots of the side arms, substantially as described.

12. In a hand-stamp, a frame having side arms with slots at each side of the upper portion thereof and two sets of notches at the lower ends thereof; in combination with two frames carrying printing characters, said frames inserted between said side arms and each frame having projections near its lower end fitting in the notches of the side arms and axle-pins near the upper ends thereof fitting in the slots of the side arms, substantially as described.

13. In a hand-stamp, a frame having substantially parallel side arms, a die-plate coacting therewith and having two side arms coacting with the side arms of the frame and having slots near their upper ends, the side arms of the main frame having means slidingly supporting the side arms of the die-plate; and means on the side arms of the main frame coacting with the slots in the side arms of said die-plate for adjusting the die-plate in position, the said slots in the side arms of the die-plate being open-ended whereby said die-plate may be easily removed, substantially as described.

14. In a hand-stamp, a frame having substantially parallel side arms each having a strap or loop thereon; a die-plate coacting with said parallel side arms and having two side arms passing through said straps or loops and having open-ended slots near their upper ends; and thumb-screws on said parallel side arms coacting with the open-ended slots in the side arms of said die-plate for adjusting the same, the open-ended slots permitting the die-plate to be removed without removing the thumb-screws, substantially as described.

15. In a hand-stamp, a die-plate and means for supporting it, said die-plate having slots therein; and two independent sets of type-bands and frames therefor; said frames arranged substantially parallel with each other and detachably held with relation to said die-plate, the characters on said bands projecting through the slots in said die-plate, substantially as described.

16. In a hand-stamp, a die-plate and means for supporting it, said die-plate having slots therein, and two sets of type-bands having their frames detachably held with relation to said die-plate; the characters on said bands projecting through the slots in said die-plate and said die-plate and said frames being adjustable with relation to each other, whereby their type may be brought into the same exact printing-plane, substantially as described.

17. In a hand-stamp, a main frame having side arms and slots therein and a frame and a series of detachably-secured printing characters on each side of said main frame, said second-mentioned frames having portions projecting in said slotted side arms, substantially as described.

Signed by me, at Chicago, Illinois, this 9th day of February, 1903.

ASA MERRITT COMSTOCK.

Witnesses:
EDW. B. MCMILLAN,
CHAS. R. MILNOR.