Aug. 7, 1956 J. SCHMIDT 2,757,831

POURING SPOUT

Filed Dec. 30, 1952 2 Sheets-Sheet 1

FIG. 1.

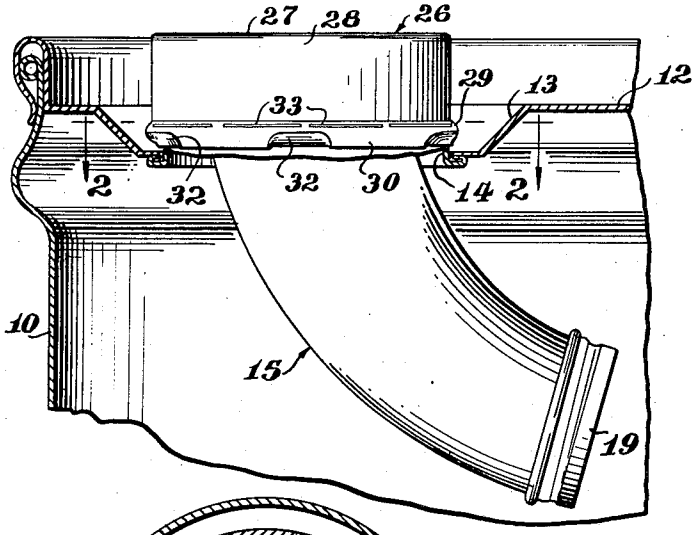

FIG. 2.

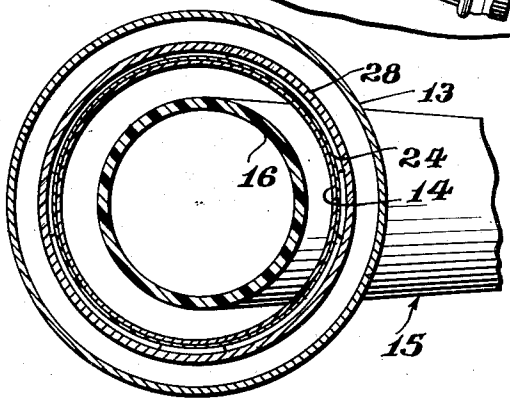

FIG. 3.

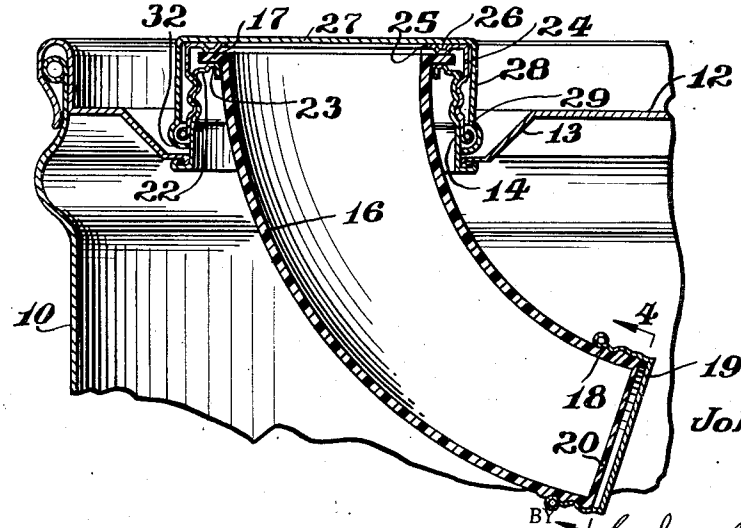

INVENTOR
John Schmidt

BY
Cushman, Darby & Cushman
ATTORNEYS

Aug. 7, 1956 J. SCHMIDT 2,757,831

POURING SPOUT

Filed Dec. 30, 1952 2 Sheets-Sheet 2

FIG. 5.

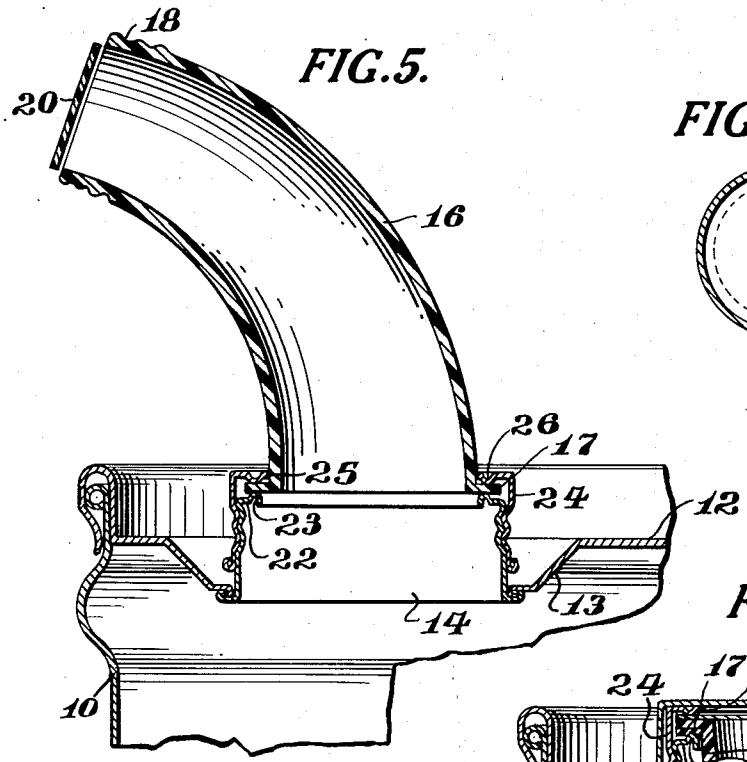

FIG. 4.

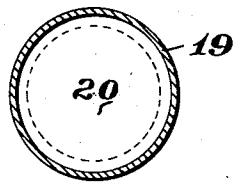

FIG. 6.

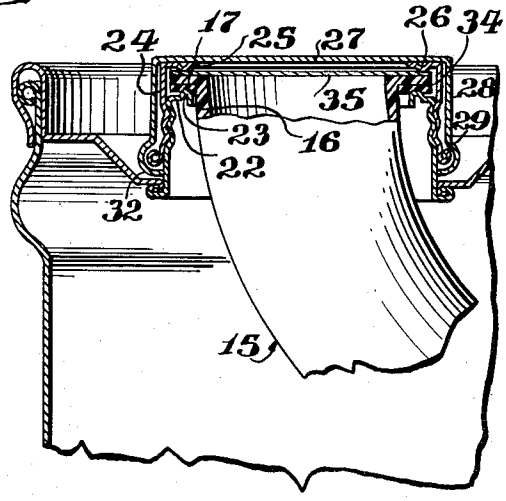

FIG. 7.

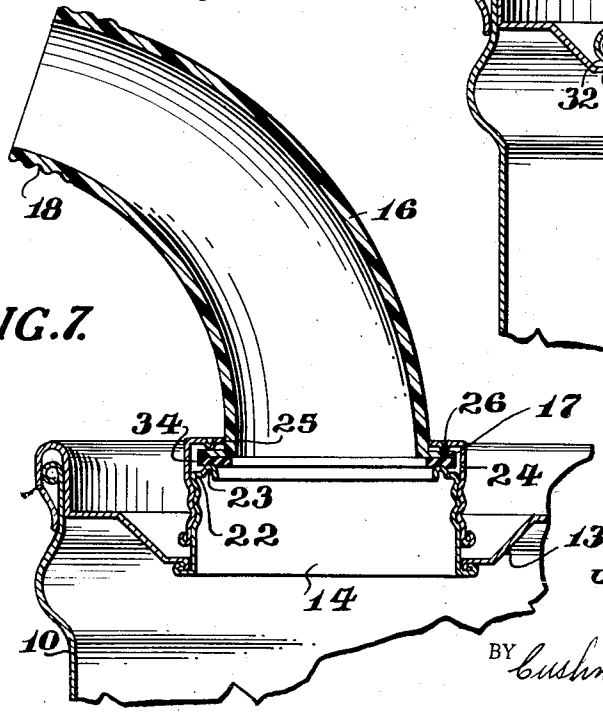

INVENTOR

John Schmidt

BY Cushman, Darby & Cushman

ATTORNEYS

United States Patent Office 2,757,831 Patented Aug. 7, 1956

2,757,831

POURING SPOUT

John Schmidt, Philadelphia, Pa., assignor, by mesne assignments, to Crown Cork & Seal Company, Inc., Baltimore, Md., a corporation of New York

Application December 30, 1952, Serial No. 328,641

6 Claims. (Cl. 222—539)

This invention relates to pouring spout units for containers, and particularly to reversible pouring spouts adapted for use with conventional sheet metal containers.

A principal object of the invention is to provide a reversible pouring spout of improved and simplified design, readily adapted for manufacture from a variety of suitable materials.

Another object of the invention is to provide a novel, one-piece pouring spout composed of synthetic organic plastic material, which may be sealed, reversed and resealed repeatedly, without the aid of gaskets or similar elements. A related object is to provide a reversible pouring spout proof against the corrosive action of various chemicals and chemical mixtures.

A further object is to provide a pouring spout having its outer end closed by an integral but destructible end wall, whereby entry of liquid into the spout when sealed in a container is prevented, and prior use of the spout is clearly evidenced.

Yet another object is to provide a reversible pouring spout unit including an overall, tamper-proof seal cap, which must be destroyed for access to the spout and serves to close the base end of the spout when sealed inside a container. Further objects of the invention will be in part obvious and in part pointed out hereinafter.

The invention and the novel features thereof may best be made clear from the following description and the accompanying drawings, in which:

Figure 1 is a side elevational view of a preferred embodiment of the invention, sealed in a conventional container shown in section;

Figure 2 is a sectional view taken on the line 2—2 of Figure 1;

Figure 3 is a sectional view corresponding to Figure 1;

Figure 4 is a sectional view taken on the line 4—4 of Figure 3;

Figure 5 is a sectional view corresponding generally to Figures 1 and 3, but showing the pouring spout in reversed and extended position, with original sealing elements removed;

Figure 6 is a sectional side view of an alternative form of the invention, showing the pouring spout sealed inside a container, and

Figure 7 is a sectional view corresponding to Figure 6, showing the pouring spout in extended position, ready for use.

Referring to the drawings in detail, in Figures 1, 3, and 5 is indicated a conventional sheet metal container 10, and its top 12. The container top is provided with a well 13, in which is fixed a screw threaded neck 14. Associated with the neck 14 is a pouring spout indicated generally as 15, including a tubular body portion 16, preferably of curved and tapering configuration, as shown. At the wider or base end of the spout, an annular flange 17 extends outwardly therefrom, at right angles to the axis thereof or at any rate in a single plane. The outer or opposite end of the spout is externally screw threaded, as at 18, for reception and engagement of a screw cap 19.

As an outstanding feature of the invention, the outer end of the spout is closed by a thin, integral end wall 20, adapted to be cut away or otherwise destroyed and removed before use.

For shipment, the spout is disposed as illustrated in Figures 1 and 3, with its flange 17 resting on the edge of container neck 14 and the body of the spout enclosed within the container. The container neck is desirably, although not necessarily, formed at its outer end into an inwardly extending flange 22, which may be provided with an annular upstanding bead 23 adapted to engage the spout flange. The spout is retained in position by means of a screw cap 24, threadably engaged to the container neck. The base of cap 24 is centrally apertured at 25, and adjacent the aperture may be provided with an annular inwardly extending bead 26, also adapted to engage the spout flange.

The elements described comprise a completely operative and useful pouring spout unit. The spout may be constructed of metal, but preferably is constructed of synthetic organic plastic material. A number of plastic materials may be readily and relatively inexpensively molded to final form, and are adequately deformable to permit effective sealing without the aid of gaskets or the like. In the embodiment described, for example, the spout flange may be pressure engaged between the outer end of the container neck, or its bead 23, and the base of cap 24, or its bead 26, and for a variety of purposes this pressure engagement of the plastic flange has been found quite effective to seal the contents of the container. The elimination of gasketing is obviously advantageous, particularly in that it avoids the problem of selecting suitable gasket materials for the various compounds which may be shipped in the containers. Additionally, the use of extra, loose parts, easily misplaced or damaged, is completely obviated.

With the spout mounted and enclosed as shown in Figures 1 and 3, the container contents are fully protected and sealed. Escape or leakage through the container neck is prevented by the pressure engagement between spout flange 17 and neck bead 23, and entry of contained material into the interior of the pouring spout is fully prevented by the integral end wall 20 thereof. Screw cap 19 is conveniently mounted on the outer end of the spout, for a purpose hereinafter set forth.

A synthetic organic plastic material particularly suitable as a spout material is vinyl resin, such as a vinyl chloride-vinyl acetate copolymer. Other suitable materials are acrylic resin such as methyl methacrylate, nylon, polyethylene, polystyrenes, and synthetic rubbers. These and equivalent materials are relatively inert, and compressible adequately to achieve a satisfactory seal.

To insure against tampering and assure the purchaser that the original contents of the container have not been disturbed, the pouring spout unit may in shipment be covered by an overall tamper-proof seal cap 26, positioned over and enclosing screw cap 24. The seal cap performs the additional function, it will be particularly noted, of protecting the open base end of the spout, whereby trash, dirt, and the like may not readily find their way into the interior thereof. The seal cap is preferably of hat shape, and may comprise a top 27 and a cylindrical body portion 28. The body portion terminates in an outwardly offset shoulder 29, from which an annular skirt 30 depends, the skirt section being disposed substantially parallel to the body portion. When the seal cap has been positioned over screw cap 24 and the spout retained thereby, it may be secured in place by crimping at spaced intervals, as at 32. As illustrated in Figure 1, the seal cap may be crimped at four places spaced equally about its circumference, and as illustrated in Figure 3, is crimped tightly

against the base of container neck **14**. In its shoulder **29**, the seal cap desirably is segmentally scored, as at **33**.

Operation of the device will now be described in detail. The spout unit is preferably assembled for shipment as disclosed in Figure 1, with the seal cap positioned and securely crimped thereabout. As will be evident, access to the spout can be had only through removal of the seal cap, which can be effected only by destruction thereof. In order to dispense the container contents, a sharp instrument may be inserted into the scores **33** of the seal cap, and the cap skirt **30** destroyed by such instrument or completely separated from the body portion thereof. The seal cap being removed and discarded, screw cap **24** may be threadably disengaged from the container neck, and the pouring spout **15** removed from the container, conveniently by inserting a finger thereinto for grasping. The spout screw cap **19** may be removed, and the end wall **20** of the pouring spout must then be cut out or otherwise destroyed. This having been done, the spout and screw cap **24** may be reassembled in the relationship illustrated in Figure 5, whereupon the contents of the container may be readily dispensed. The base end of the spout, it will be noted, fits within aperture **25** of screw cap **24**, and when asembled in pouring position, the spout flange is again sealed to the container neck and to the retaining screw cap **24** in the manner previously described. The interior of the spout, having been protected by its end wall **20** and seal cap **26**, will be free of dirt or other contaminant, and the spout may be used immediately without cleaning. If the container contents are only partially used, screw cap **19** may be employed to temporarily close the outer end of the spout, and protect the material remaining.

In special cases, for example when distant shipment and prolonged storage may be involved, additional elements may be employed with the invention, to insure permanence of the seal in spite of prolonged vibration and the like. As illustrated in Figure 6, the spout unit may be assembled with a separate annular gasket **34** of suitable material positioned between the spout flange and the container neck. Also, to furnish additional protection against the entry of dust, water, etc. into the interior of the pouring spout, a disc insert **35** of metal or other suitable material may be provided to close the open end of the spout. Such disc is most conveniently disposed between the spout flange and the base of screw cap **24**, as shown. When this embodiment of the invention is unsealed for dispensing, the disc insert is of course discarded, and the gasket **34** may be similarly discarded, or it may be removed from the spout and further employed between the spout flange and the container neck, as illustrated in Figure 7.

It will thus be seen that there has been provided by this invention a structure in which the various objects hereinbefore set forth, together with many practical advantages, are successfully achieved. As various possible embodiments may be made of the mechanical features of the above invention, all without departing from the scope thereof, it is to be understood that all matter hereinbefore set forth or shown in the accompanying drawings is to be interpreted as illustrative, and not in a limiting sense.

I claim:

1. A container including a screw threaded neck, a reversible spout associated with said neck, said spout having a base flange adapted for cooperation with said neck and being closed at its other end by an integral end wall, an apertured screw cap adapted to threadably engage said neck whereby the flange of said spout may be retained therebetween, and a tamper-proof seal cap enclosing said screw cap and fastened thereabout in such manner that removal of said seal cap cannot be effected without destruction thereof.

2. The invention as defined by claim 1, wherein said spout is composed of synthetic organic plastic material.

3. A container including a screw threaded neck, a reversible spout associated with said neck, said spout having a base flange adapted for cooperation with said neck and being closed at its other end by an integral end wall, an apertured screw cap adapted to threadably engage said neck whereby the flange of said spout may be retained therebetween, and a seal cap enclosing said screw cap and crimped thereabout to said neck, said seal cap being circumferentially scored to facilitate tearing thereof.

4. The invention as defined by claim 3, wherein said spout is composed of synthetic organic plastic material.

5. The invention as defined by claim 3, including a metal disc disposed between said spout base flange and the base of said screw cap.

6. The invention as defined by claim 1, including a metal disc disposed between said spout base flange and the base of said screw cap.

References Cited in the file of this patent

UNITED STATES PATENTS

2,025,747	Hothersall	Dec. 31, 1935
2,070,783	Conner	Feb. 16, 1937
2,103,406	Conner	Dec. 28, 1937
2,207,176	Phillips	July 9, 1940
2,661,128	Rieke	Dec. 1, 1953