United States Patent

[11] 3,599,966

[72] Inventors George D. Del Vecchio
Briscoe Cove, North Rose;
Larry H. Warren, East Rochester, both of, N.Y.

[21] Appl. No. 829,607
[22] Filed June 2, 1969
[45] Patented Aug. 17, 1971
[73] Assignee Xerox Corporation
Rochester, N.Y.

[54] SHEET-HANDLING APPARATUS
8 Claims, 9 Drawing Figs.

[52] U.S. Cl. 271/9, 271/62
[51] Int. Cl. B65h 1/28
[50] Field of Search 271/9, 62, 39

[56] References Cited
UNITED STATES PATENTS

2,654,603	10/1963	Williams et al.	271/62
3,415,510	12/1968	Mileski	271/9

Primary Examiner—Joseph Wegbreit
Attorneys—Norman E. Schrader, James J. Ralabate and Michael J. Colitz, Jr.

ABSTRACT: An assembly for supporting two stacks of copy sheet material in a xerographic reproducing machine. The assembly includes an upper tray for supporting sheets of a first characteristic and a lower tray for supporting sheets of a second characteristic. The trays are movable together in a vertical plane while the upper tray is also movable in a horizontal plane to thereby permit the positioning of either stack beneath sheet-forwarding elements of the machine.

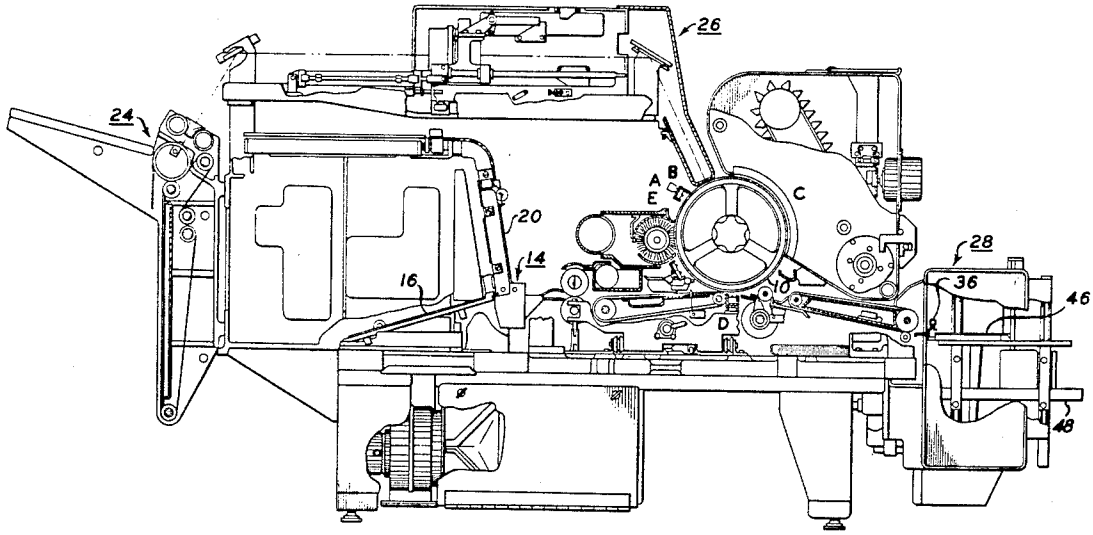

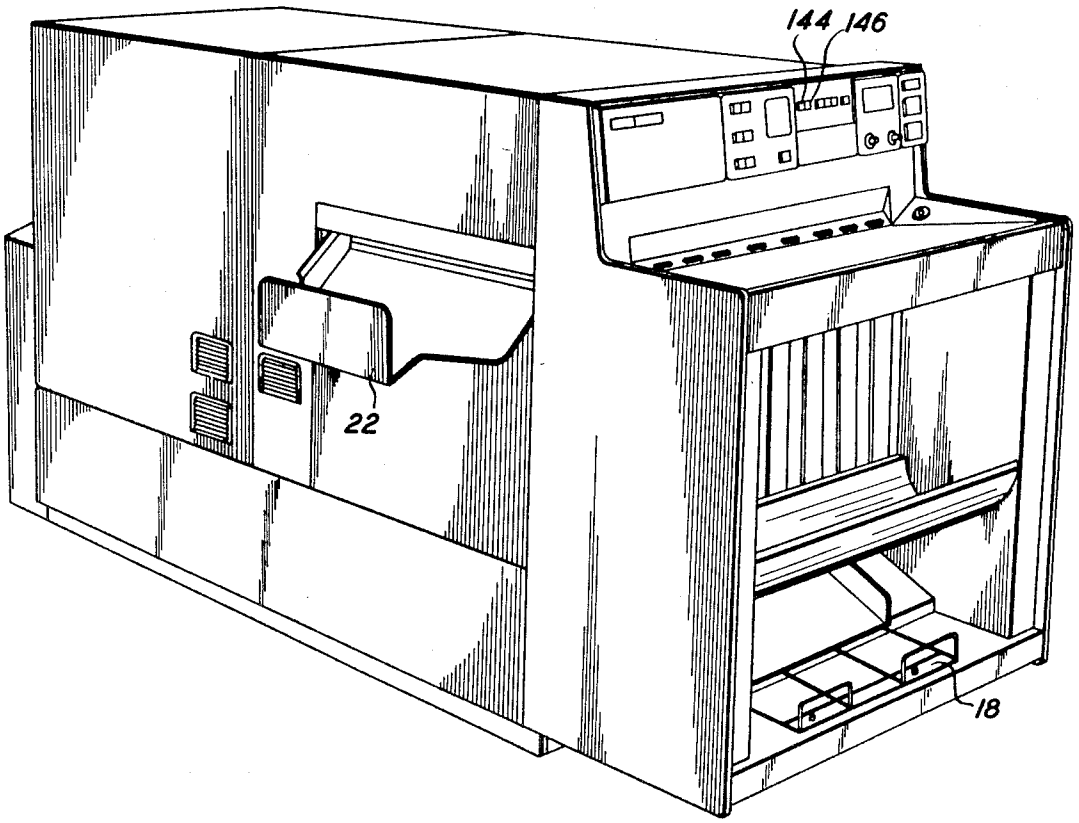

FIG. 1

INVENTORS
GEORGE D. DEL VECCHIO
LARRY H. WARREN
BY
Michael J. Colitz, Jr.
ATTORNEY

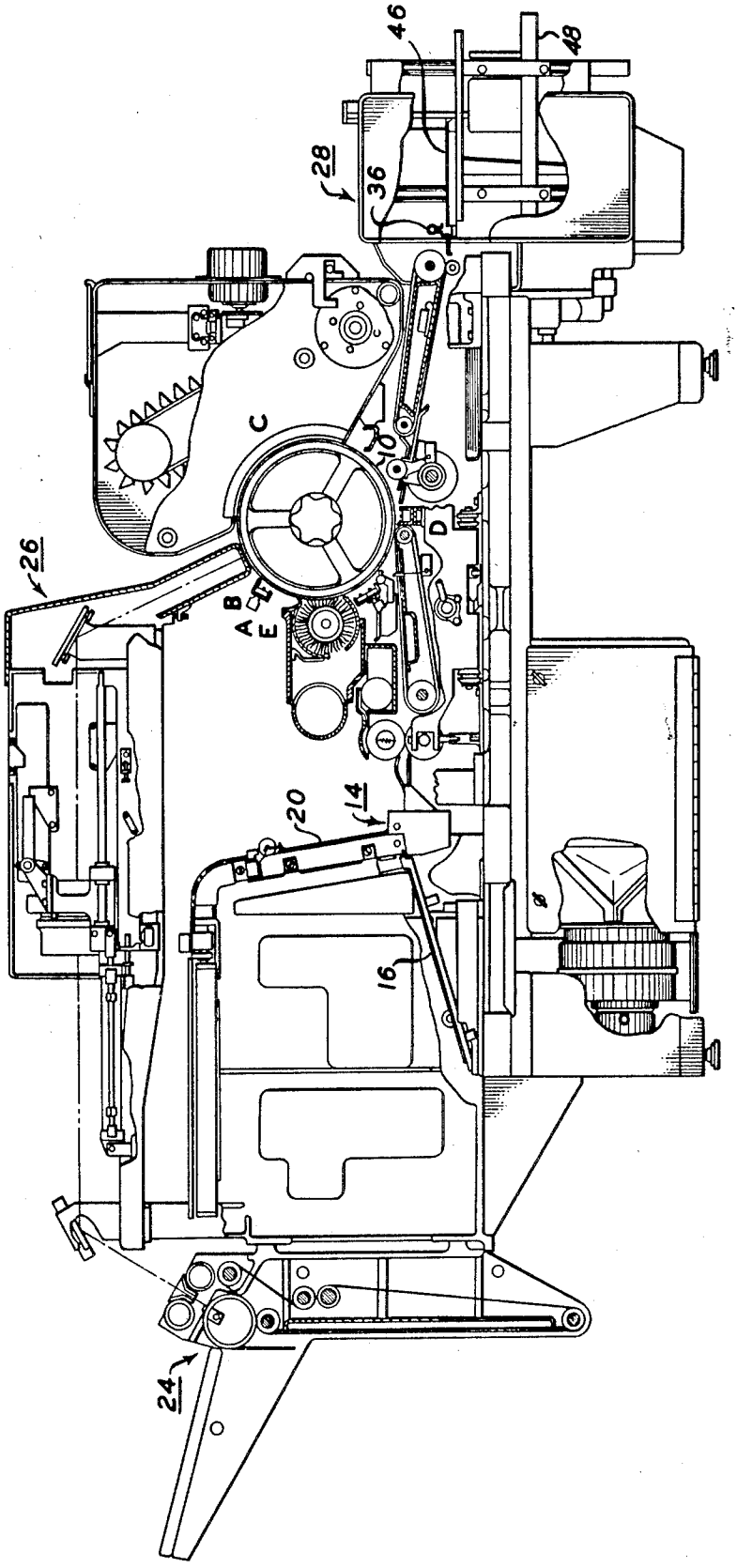

FIG. 2

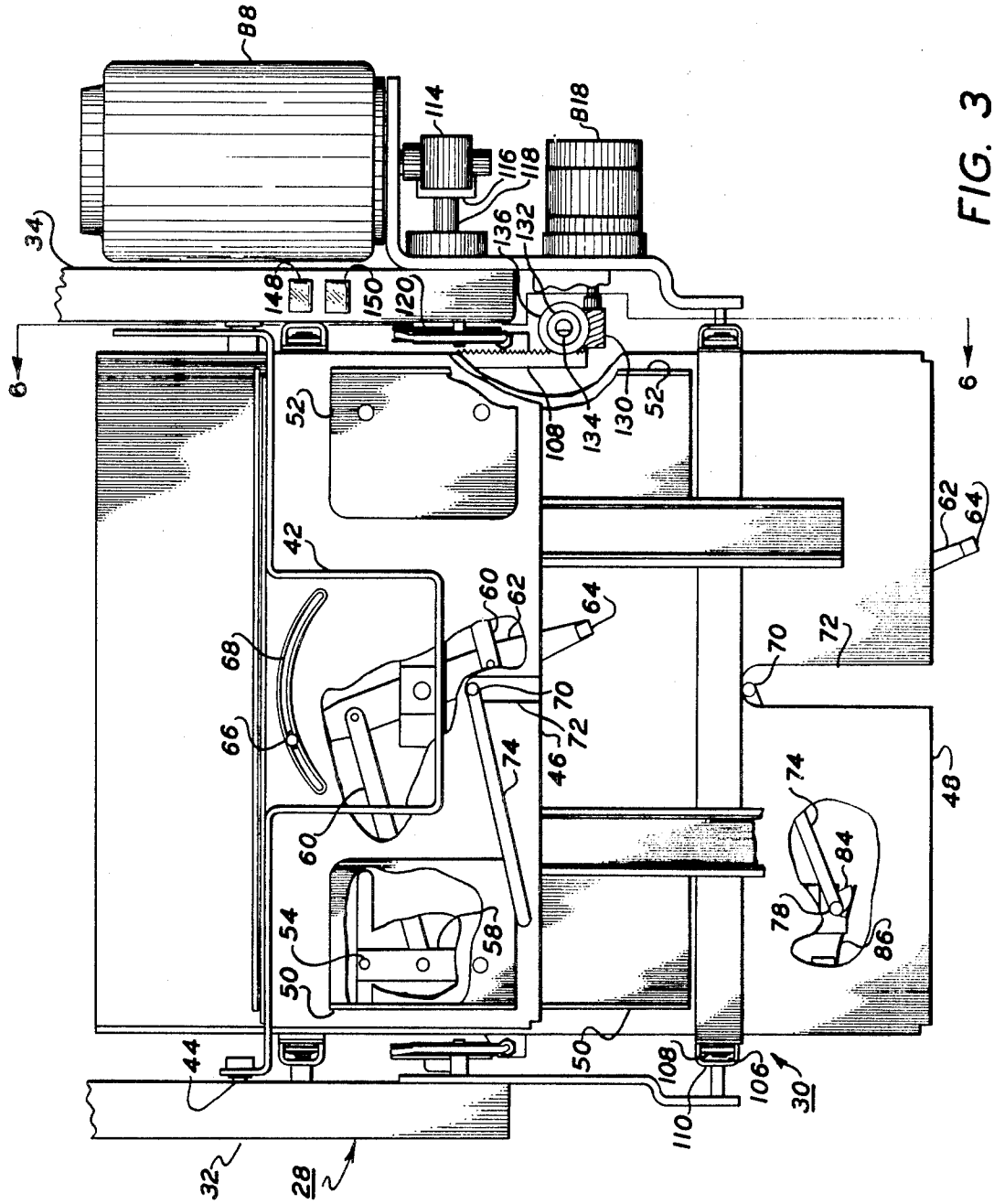
88
114
818
116
118
136
132
34
148
150
120
6
6
52
52
108
134
130
62
64
42
60
62
64
68
70
72
66
70
72
74
46
48
74
84
60
78
86
54
58
50
50
44
108
106
30
110
32
28

FIG. 3

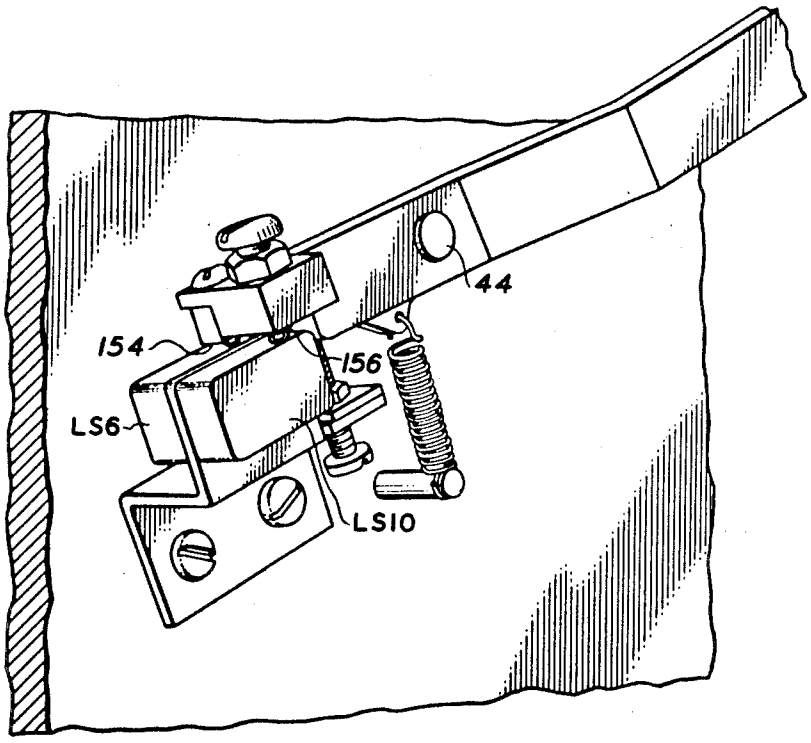

FIG. 4

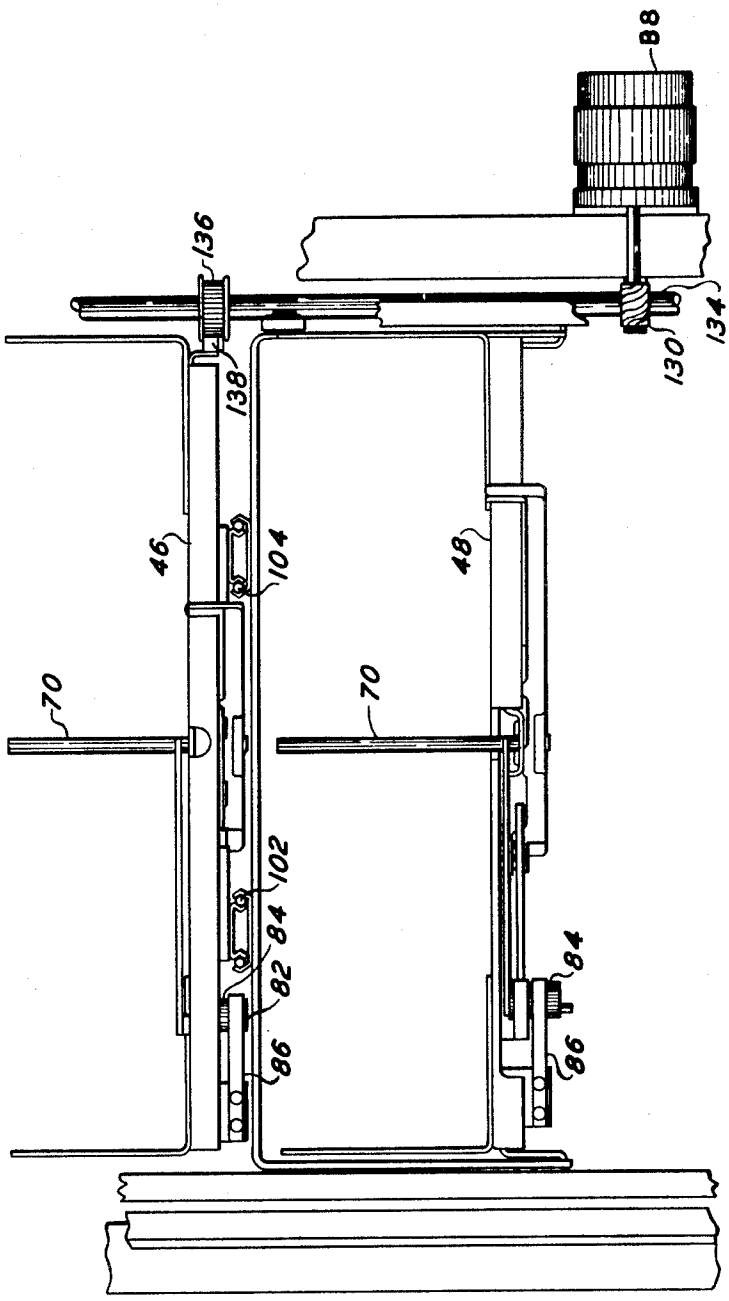

FIG. 5

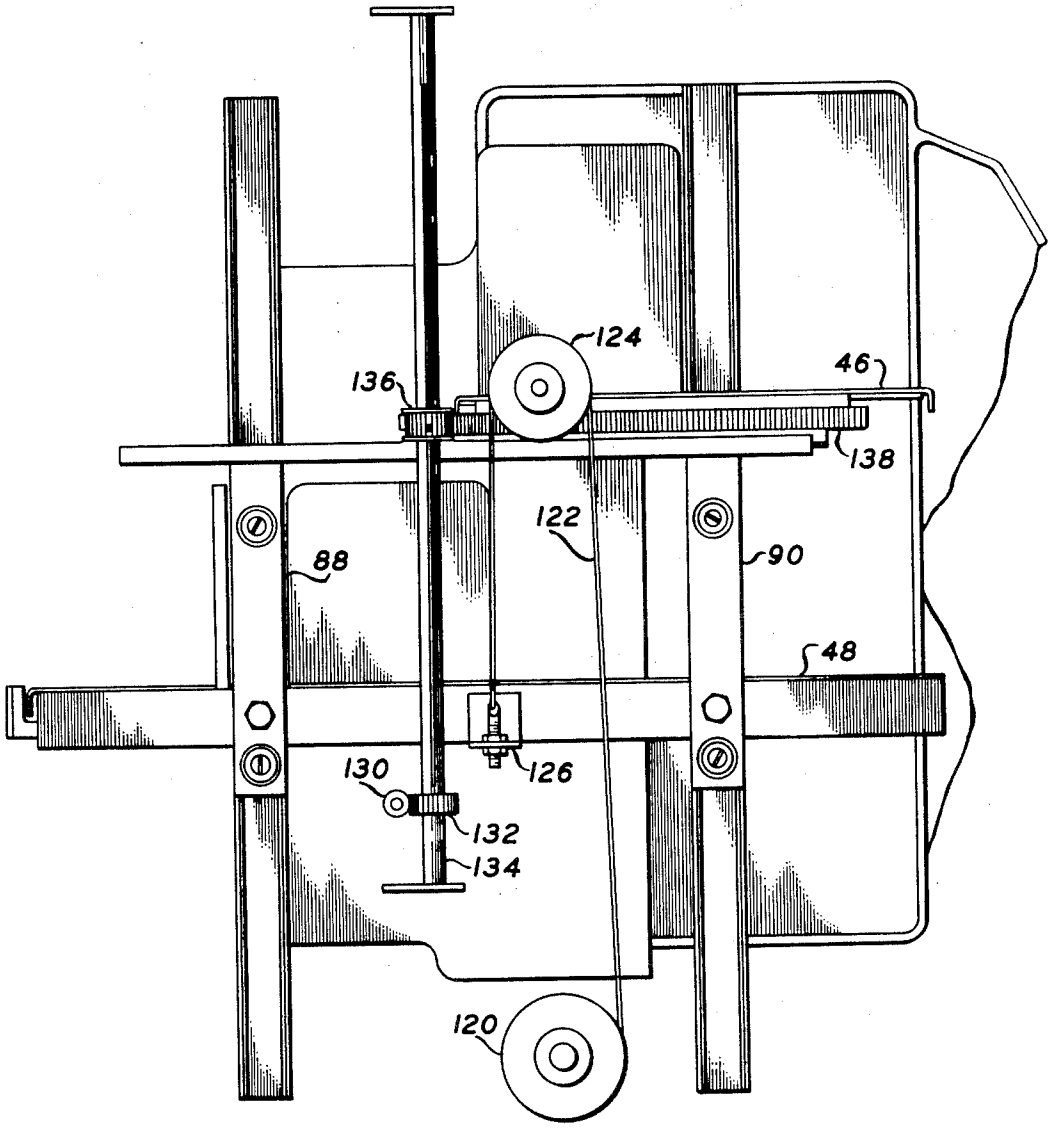

FIG. 6

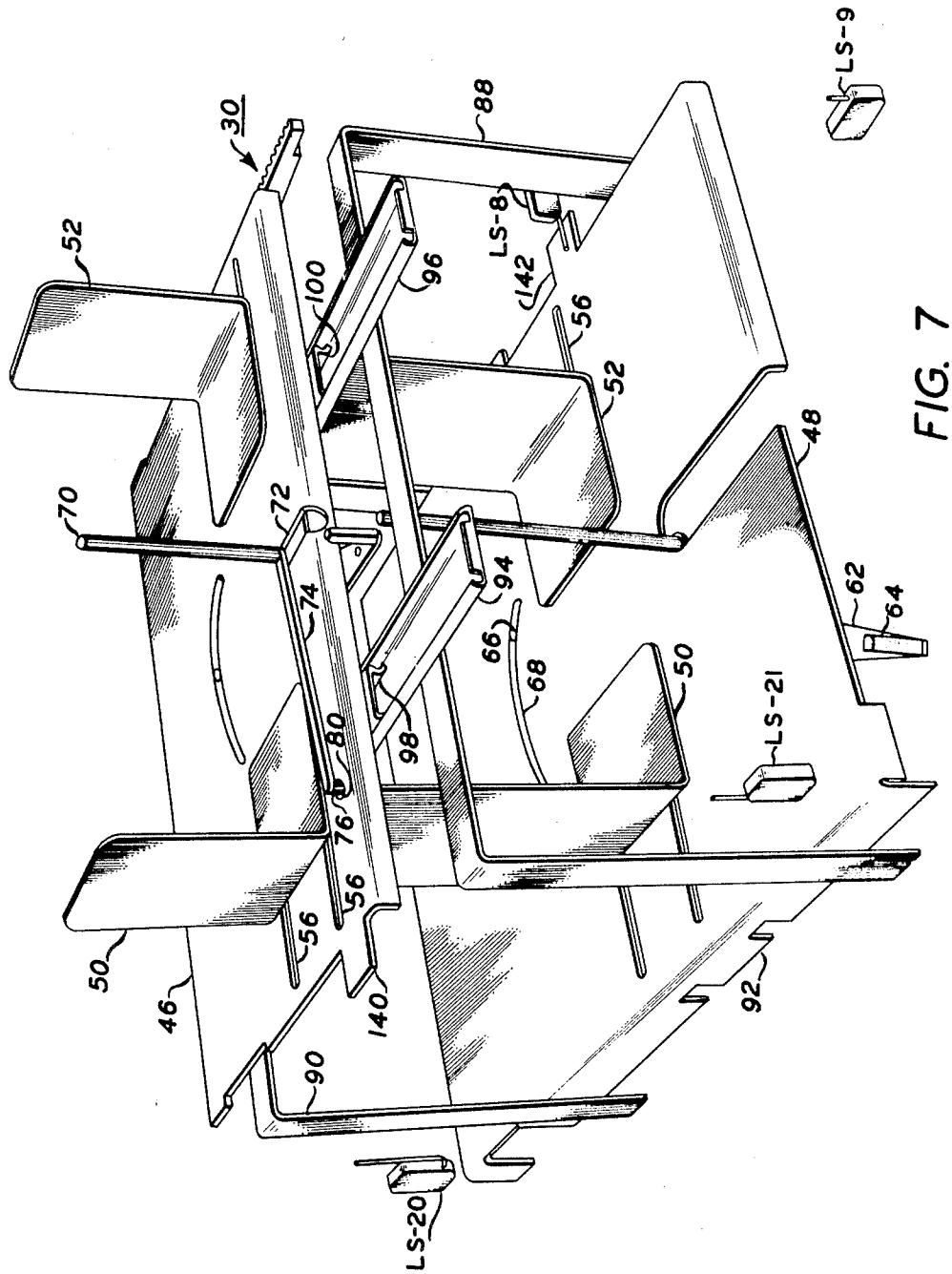
30
88
LS-9
LS-8
52
100
96
142
56
52
48
70
72
74
94
62
64
66
68
50
LS-21
98
80
76
56
56
50
46
140
90
92
LS-20

FIG. 7

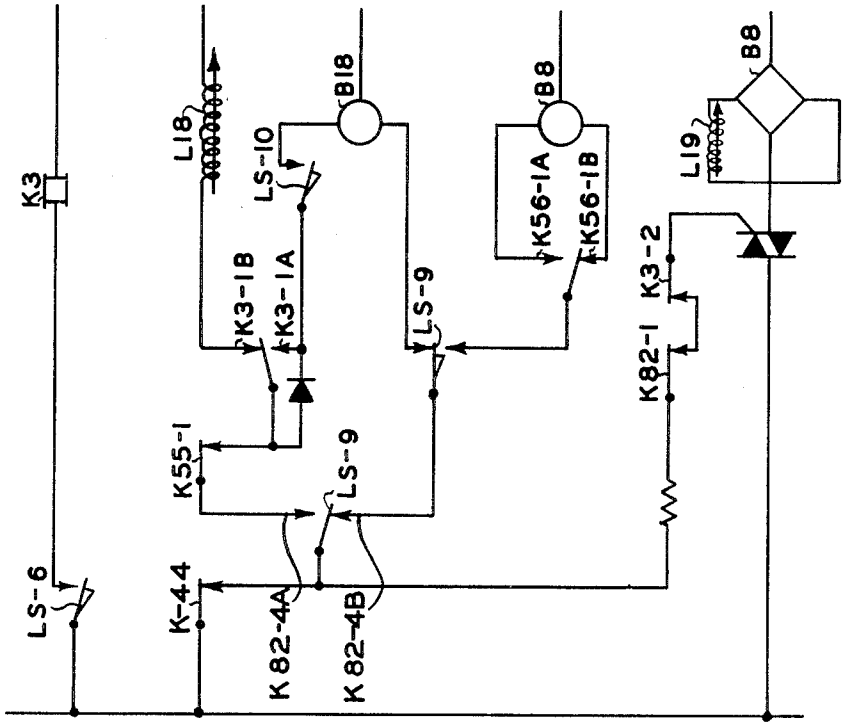
K3
L18
LS-10
B18
B8
K56-1A
K56-1B
L19
K3-1B
K3-1A
LS-9
K3-2
K55-1
LS-9
K82-1
LS-6
K-44
K 82-4A
K 82-4B

FIG. 8A

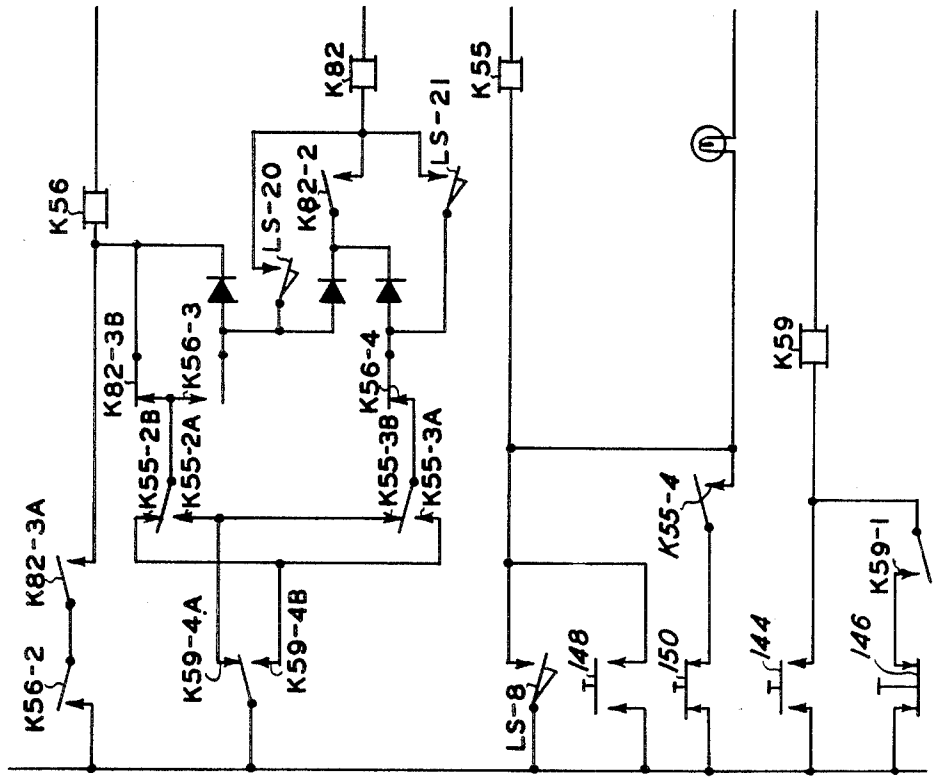
K56
K82
LS-21
K55
LS-20
K82-2
K82-3B
K56-3
K56-4
K59
K55-2B
K55-2A
K55-3B
K55-3A
K55-4
K82-3A
K56-2
K59-4A
K59-4B
LS-8
148
150
144
146
K59-1

FIG. 8B

SHEET-HANDLING APPARATUS

This invention relates to an assembly for supporting stacks of sheets and more particularly to selectively movable trays capable of supporting stacks of sheet material, the trays being automatically positionable for the forwarding of single sheets from a preselected stack.

In the process of xerography, as described in U.S. Pat. No. 2,297,691 to Chester F. Carlson, a xerographic surface comprising a layer of photoconductive insulating material affixed to a conductive backing is used to support electrostatic images. In the usual method of carrying out the process, the xerographic surface is electrostatically charged uniformly over its surface and then exposed to a light pattern of the image being reproduced to thereby discharge the charge in the areas where light strikes the layer. The undischarged areas of the layer thus form an electrostatic charge pattern in conformity with the configuration of the original light pattern.

The latent electrostatic image can be then developed by contacting it with a finely divided electrostatically attractable material such as a powder. The powder is held in image areas by the electrostatic charges on the layer. Where the charge field is greatest, the greatest amount of material is deposited; where the charge field is least, little or no material is deposited. Thus a powder image is produced in conformity with the light image of copy being reproduced. The powder is subsequently transferred to a sheet of paper or other surface and suitably affixed thereto to form a permanent print.

Most xerographic equipment in commercial use today is adapted to make reproductions on sheet material retained in a stack within the equipment. When it is desired to reproduce the original onto a sheet of different size or color, it is necessary to remove the original stack of sheet material and replace it with a stack of sheet material of the desired characteristic. Such a system is disclosed in U.S. Pat. No. 3,301,126 issued in the name of Osborne et al. and U.S. Pat. No. 3,378,255 issued Apr. 16, 1968 in the name of V. C. Draugelis et al. Simplified approaches for feeding sheet material of diverse characteristics through a xerographic reproducing machine are disclosed in U.S. Pat. No. 3,415,510 issued Dec. 10, 1968 in the name of Raymond P. Mileski and U.S. Pat. No. 3,273,883 issued in the name of R. Baronnie.

According to the Mileski disclosure, sheets of diverse characteristics are fed through the machine by the use of a supplemental tray. The tray retains the supplemental sheets and is positioned adjacent the original stack of sheet material so as to position the leading edge of the supplemental sheets to be fed beneath fixed sheet-forwarding means. According to the Baronnie disclosure, stacks of sheet material are supported adjacent a sheet-forwarding roller. When sheets of the first characteristic on the lower tray are to be forwarded, the sheets on the upper sheet support tray are manually retracted so that the sheet-forwarding device may be lowered to contact and forward the topmost sheet of the lower stack. When sheets of the second characteristic are to be forwarded, the sheet-forwarding roller must be lifted, the upper stack of sheets manually pushed into an advanced position and the feed roller positioned thereon. In both instances, the feeding of sheet material of a diverse characteristic requires the manual repositioning of the sheet material and/or sheet-forwarding elements to effect this result.

The present invention is directed to apparatus for automatically positioning one of a plurality of stacks of sheet material adjacent sheet-forwarding mechanisms. The apparatus is constructed so that this positioning is automatically achieved through the minimum of effort and manipulation of an operator with the assurance of the positioning of the correct stack with respect to the sheet-feeding means. The apparatus also provides for the sensing of a low paper condition in either stack of sheet material being forwarded as well as the prohibiting of forwarding sheet material when the proper stack of sheet material is not in the desired location.

It is therefore an object of the instant invention to forward sheet material.

It is a further object of the instant invention to forward sheet material from a preselected stack of sheet material.

It is a further object of the instant invention to selectively position a preselected one of a plurality of stacks of sheet material in an orientation whereby sheet material may be sequentially forwarded therefrom.

It is a further object of the instant invention to automatically position sheet material of a desired characteristic in a location for being forwarded to the exclusion of sheet material from another stack associated therewith.

These and other objects of the instant invention are attained in accordance with the present invention by an assembly for supporting two separate stacks of sheet material, either of which can be sequentially fed. The assembly includes an upper tray for supporting sheets of a first characteristic and a lower tray for supporting sheets of a second characteristic. The trays are vertically movable together toward and away from sheet-feeding means while the upper tray is horizontally movable to thereby permit the positioning of either stack beneath sheet-forwarding elements. Automatic controls are provided to permit the selective positioning of either of the trays operatively adjacent the sheet-forwarding means.

Further objects of this invention together with additional features and advantages thereof will become apparent from the following description of one embodiment of the invention when read in conjunction with the accompanying drawings, wherein:

FIG. 1 is a perspective view of a continuous and automatic reproducing machine employing the sheet-supporting assembly of the instant invention;

FIG. 2 is a schematic representation of the xerographic reproducing machine as shown in FIG. 1;

FIG. 3 is a plan view of the sheet-forwarding assembly without sheets and with the upper tray in its sheet-forwarding orientation;

FIG. 4 is a perspective view of the portion of the exterior of the assembly with parts removed;

FIG. 5 is a rear elevation of the sheet support assembly shown in FIG. 3;

FIG. 6 is a side elevation of the sheet-supporting assembly shown in FIGS. 4 and 5;

FIG. 7 is a perspective view of the sheet-supporting assembly removed from its supporting members; and

FIGS. 8A and 8B are electrical schematics of the programming mechanisms for the sheet-supporting assembly.

Referring now to the drawings, there is shown schematically in FIG. 2 an embodiment of the subject invention in a suitable environment such as an automatic xerographic reproducing machine. The automatic xerographic reproducing machine includes a xerographic plate or surface 10 formed in the shape of a drum. The plate has a photoconductive layer or light-receiving surface on a conductive backing, journaled in a frame to rotate in the direction indicated by the arrow. The rotation will cause the plate surface to sequentially pass a series of xerographic processing stations. For the purposes of the present disclosure, the several xerographic processing stations in the path of movement of the plate surface may be described functionally as follows:

A charging station A, at which a uniform electrostatic charge is deposited on the photoconductive plate;

An exposure station B, at which a light or radiation pattern of copy to be reproduced is projected onto the plate surface to dissipate the charge in the exposed areas thereof to thereby form a latent electrostatic image of the copy to be reproduced;

A developing station C at which xerographic developing material, including toner particles having an electrostatic charge opposite to that of the latent electrostatic image, is cascaded over the plate surface whereby the toner particles adhere to the latent electrostatic image to form a toner image in a configuration of the copy being reproduced;

A transfer station D at which the toner image is electrostatically transferred from the plate surface to a transfer material or a support surface; and

A drum-cleaning and discharge station E at which the plate surface is brushed to remove residual toner particles remaining thereon after image transfer and exposed to a relatively bright light source to effect substantially complete discharge of any residual electrostatic charge remaining thereon.

It is felt that the preceding description of the xerographic process is sufficient for an understanding of the instant invention. Further details of the xerographic apparatus may be had by reference to U.S. Pat. No. 3,301,126 issued to Osborne et al.

In addition to the above-described apparatus disclosed in the Osborne et al. patent, the xerographic machine, as particularly shown in FIG. 2 may be provided with a sheet directing and folding assembly 14 of the type disclosed in application Ser. No. 829,365 filed concurrent herewith in the name of George D. DelVecchio et al. In this manner, the copy sheet may be directed along a first sheet feed path 16 to copy catch tray 18 or in the alternative, the copy sheet may be directed along the second sheet feed path 20 toward the second copy catch tray 22.

The original document to be reproduced is preferably supported and moved through the first end of the imaging path by a document conveyor assembly 24 which may be of a type disclosed in application Ser. No. 829,608 also filed concurrent herewith in the name of George D. DelVecchio et al. The optical assembly 26 may be of the type disclosed in application Ser. No. 829,605 filed concurrent herewith in the name of George D. DelVecchio et al.

The sheet-supporting assembly is indicated, generally, by numeral 28. The assembly includes a movable carriage 30 capable of supporting the sheet material. The carriage is mounted between fixed side frame plates 32 and 34 in the same fashion as described in the aforementioned Draugelis et al. application. Also provided adjacent the area where sheets are forwarded are pneumatic sniffer tubes 36 cooperable with the topmost sheet in the stack which is positioned for forwarding. When the stack of sheet material being forwarded is positioned beneath the sniffer tubes, the uppermost sheet is in contact with the pair of resilient snubber tabs 38 which aid in the forwarding of only single sheets. Pneumatic fluffers may also be provided for raising the topmost sheet of the stack away from the remainder of the stack for the proper forwarding of single sheet material. Above and in contact with the topmost sheet in the stack being forwarded, is a U-shaped sensor bar 42 adapted to pivotally rest on the topmost sheet in the stack. Due to the forwarding of sheet material, the stack becomes depleted to effectively lower the topmost sheet being forwarded. The sensor bail is pivotally mounted at 44 to the side frame plates 32 and 34 so that when this depletion occurs, the sensor bar 42 pivots downwardly contacting the topmost sheet to sense the depletion of sheet material and permit the raising of the sheet-supporting tray. Insofar as it has been described, the apparatus and mode of operation of the sheet-forwarding mechanisms is substantially the same as that described in the aforementioned Draugelis et al. application.

The sheet-supporting carriage of the instant invention is provided with the two sheet-supporting trays, an upper tray 46 and a lower tray 48. The upper or A tray is adapted for supporting sheet material 8½ inches by 11 or 13 inches with the longer dimension transverse to the direction of sheet feed movement. The lower, or B tray is adapted for supporting 11-inch by 17-inch material with the smaller dimension transversed to the direction of sheet feed movement. The selection of these sizes is by way of illustration only, and it can be readily understood that any size sheet may be provided in either of the trays within the limits of their acceptance. Furthermore, sheet material of different colors or characteristics could readily be employed.

In order to accommodate sheet material of various sizes, each of the trays is provided with shiftable side margin guides 50 and 52. Each of the side margin guides is provided with a pair of downwardly extending projections 54 extending through elongated slots 56 in the trays. Both the upper and lower side margin guides function in the same manner. Thus, it is only necessary to described the operation of one.

In the upper tray, for example, the downwardly extending projections 54 beneath the margin guides are provided with a crossbar 58 on the side of the tray removed from the margin guides. Each of the crossbars is pivotally secured at a central portion to the exterior end of a connecting link 60. The connecting link is pivotally secured to a pivotable adjustment bar 62 having a handle portion 64 on its outboard end and having an upturned projection 66 on its inboard end. The upturned projection rides in an arcuate slot 68 in its associated tray. In this manner, movement of the handle portion 64 of the adjustment bar 62 causes the upturned portion to ride within the arcuate slot 68. This motion causes the equal and opposite movement of the pivot points of the connecting links about the axis of rotation of the adjustment rod. This motion, in like turn, is translated to the equal and opposite movement of the crossbars 58 and edge guide towards or away from the centerline of the associated tray. As mentioned above, both trays function in the same manner to provide equal and opposite movements of the margin guides. Thus, sheet material being fed through can always be centered with respect to the direction of motion of the sheet feed.

Also provided on each of the sheet-supporting tray is a pressure rod 70 to exert a slight resilient pressure on the trailing edge side of the stack of documents to assure that they are always forward with respect to the pneumatic sniffer tubes for proper forwarding. This function is accomplished through the pressure rod extending through recesses 72 in the trays. The upstanding rod is formed as an integral upturned extension of a pivotal bar 74 which has, at its other end, a second or pivotal extension 76 or 78 mounted on the tray with which it is associated. On the upper tray 46, this pivotal extension 76 extends through an aperture 80 in the tray and it is pivotally mounted on a plate extension 82 of the tray. On the lower tray, the second pivotal extension 78 extends upwardly and is pivotally mounted to the tray itself. The pivotal extension 76, 78 of each bar 74 is provided with an eccentric portion 84 rotatable therewith. A leaf spring 86 is secured to the tray, and urges the eccentric in a counterclockwise direction as viewed in FIG. 3 to urge the rod and its upstanding pressure rod 70 into resilient engagement with the stack of sheet material supported on the tray. This assists in assuring the proper forward positioning of sheets within the stacks.

The upper and lower trays 46 and 48 are secured together for concurrent, vertical movement through a pair of support brackets 88 and 90. Each of the support brackets is bolted or otherwise secured to downward extension 92 of the lower tray. The upper horizontal extent of these brackets support a pair of guide tracks 94 and 96 cooperable with supplemental track members 98 and 100 secured to the undersurface of the upper tray. Ball bearing assemblies 102 and 104, as shown in FIG. 5, interconnect these track members to permit the sliding movement of the supplemental track members 98 and 100. This, consequently, permits movement of the upper tray along the guide tracks 94 and 96 to move the upper tray 46 towards or away from the sheet-forwarding sniffer tubes 36.

Each of the support brackets has pairs of extending cylindrical projections 106 which support roller members 108. These roller members ride within channel members 110 fixedly secured with respect to the side frame plates 32, 34 of the machine.

The vertical motion of the sheet-supporting carriage is effected through the motion of up-down motor B-18. The output end of this motor is provided with a worm gear 114 coactable with worm gear 116 secured to rotate shaft 118 and spool 120 in the appropriate direction. Rotation of shaft 118 rotates spool 120 which is provided with cable 122 wound around pulley 124 and secured to plate member 126 of the lower tray 48. Consequently, rotation of reversible motor B-

18 in one direction of the other will cause the raising or lowering of the lower tray 48 and consequently the upper tray 46.

The horizontal reciprocatory motion of the upper tray 46 is effected through the action of in-out motor B-8. Rotation of motor B-8 which is also reversible, rotates worm gear 130. Rotation of worm gear 130 cooperates to rotate worm gear 132 and shaft 134 upon which it is secured. Rotation of shaft 134 rotates pinion 136 cooperable with rack 138 extending and secured to the side edge of the upper tray 46. Pinion 136 is free to slide up and down shaft 134 which is splined to retain contact between the rack and pinion during all vertical as well as horizontal positions of adjustment.

As can be seen in the various figures, especially FIG. 7, the sides of the sheet-supporting carriage are provided with cam surfaces 140 and 142 coactable with fixed limit switches on the inside faces of the side frame members 32, 34 adjacent thereto. Cam 140 coacts with LS20 and LS21 to be part of the in-and-out programming of the upper tray. Cam surface 142 coacts with LS8 to determine a low paper condition. LS6 is tripped by being contacted by the lower face of the lower tray 48 moving downwardly in contact therewith. The cams and limit switches function to provide a programmed operation of the sheet-supporting assembly among the various positions in a manner to be described.

In general operation, when sheets are to be forwarded from the upper tray it is in the position beneath the snubber tabs 38 and pneumatic sniffer tubes 36. This is referred to as the in position for the upper tray. When the upper tray is in the in position, the lower tray is in a lower position. When sheet material is being fed from the lower tray, the upper is in the out position horizontally and continues to be raised with respect to the lower tray.

Power can be supplied to the up-down motor B18 through the up-winding or down-winding to cause its driving in the proper direction. In like manner, power can be supplied to the in-out motor B8 through the in-winding or out-winding to cause its driving in the proper direction. The direction of drive of this motor depends on the orientation of its associated electrical circuitry.

The trays can be moved to and from their feeding orientations by the depression of either the A tray button 144 or the B tray button 146 on the console of the machine. If the A button is depressed while the A tray is in feeding position, nothing will happen. The same is true of the depression of the B tray button while the B tray is in the feeding position. If, however, the B button is depressed while the A tray is in the feeding position, both trays will lower and then the A tray will move outwardly. After this, both trays will move upwardly to position the B tray in its feeding orientation. If the A button is then depressed, both trays will move downwardly, the A tray will then move inwardly and then both trays will move upwardly to permit feeding from the A tray.

The trays may also be moved by the depression of the UP button 148 and the DOWN button 150 adjacent the sheet support trays. If either the UP button or the DOWN button 148, 150 is depressed while the tray is already in that orientation, nothing will happen. If, however, the DOWN button is depressed while the trays are in a feeding position, they will be lowered as to permit the reloading of the tray. When the trays are lowered with the upper tray in the sheet-feeding orientation, both trays will lower and then the upper tray will move outwardly to permit its loading. Depression of the UP button will cause the upper tray to move in, then both trays up. If the DOWN button is pressed with the lower tray in the sheet-feeding orientation, both trays will move downwardly, then the upper tray will move in to permit the loading of the lower tray. Depression of the UP button will then cause the upper tray to move outwardly and both trays to raise. The tripping of limit switch LS8, which is caused by the depletion of sheet material from the active tray, functions in the same manner as the depressing of the DOWN button 150 to permit the adding of additional sheets to the appropriate trays.

If one of the tray-selecting buttons 144 or 146 is depressed while the trays are in the down position, nothing will immediately happen. Upon depression of the UP button 148, however, the tray whose associated button 144 or 146 was last depressed, will move into its operative position. Depression of the A or B buttons 144 or 146 closes contact K59-4A or K59-4B through the state of relay K59 to determine the operation of the trays. Whenever the trays are in the correct position to allow the associated xerographic machine to run, relay K82 will be energized which will cause the trays to move up and will allow indexing of the trays towards the sensor bar 42 while the feeding of sheet material is being accomplished. When K82 is energized, K82-4A is closed providing power through K55-1, K53-1A, CR3 and LS10 to energize the up-winding of motor B18. K55 is deenergized because the machine is not in a low paper condition. K3 becomes energized when the tray is down and LS6 and LS10 are actuated due to the fact that the tray is in the down position.

When power is applied to the up-winding B18, it begins to raise the trays at full speed until LS6 deactuates to drop out K3. LS6 is deactuated by the pivoting of the sensor bar and finger 152 away from the contact arm of LS6. K3-1A then opens and then the only power path to B18 is through CR3. Thus, half wave current is provided to the motor which continues to drive the motor at a considerably slower speed. The motor continues to drive up until LS10 deactuates through the pivoting of the sensor bar and finger 154 from the contact arm of LS10. At this time power is removed completely to B18 and the motor stops. This two-step process of driving the motor is done to provide better control and reduce overriding of the stack of sheet material upwardly.

When the machine runs, the sensor bar senses the stack height and as the sheets are taken off the stack, the bar drops lower until LS10 actuates. The motor then drives the stack upwardly until LS10 again deactuates. The switches are located so that LS8 does not actuate during normal indexing.

Side flutters are the same as that disclosed in the Draugelis et al. application except that they pivot outwardly away from the path of travel of the tray when the tray is to be driven downwardly and must remain in this condition until the tray returns to its up position. This is accomplished by side fluffer solenoid L19 and latch solenoid L18. Energization of L19 drives the side fluffers out and they are mechanically latched in that position. L18 unlatches the side fluffers which are preferably spring loaded causing their return to the proper functioning position.

When the tray is in the up position, K82 is energized and K82-1 is open so that L19 is deenergized. L18 is energized via K55-1, K3-1B and K82-4. Whenever the tray goes down, fluffer movement is caused by the deenergization of K82. When K82 drops out, L18 is immediately deenergized and L19 is energized. K82-1 closes supplying current to the gate of the triac, TC. The side fluffers are thus moved out and mechanically latched. The tray begins moving down and LS6 actuates energizing K3 which opens K3-2 removing power from the triac gate and thus from L19. K3 is not energized again until the tray returns to the up position. At that time, K82 is also energized and power is provided to L18 through K82-4A, K55-1 and K53-1B causing the unlatching of the fluffers.

The operating mode for the upper tray is determined by the state of K59-4A and K59-4B. K59-4A is closed by depressing the A button when it is desired to feed sheets from the upper tray. When the machine is initially turned on K82 is deenergized regardless of the operational mode selected or the position of the tray. K82-4A is open and K82-4B is closed so the down-winding of motor B18 is powered through LS9 and the trays are driven downwardly. Since K59-4A is closed the upper tray horizontal reciprocation relay K56 will be energized through K55-2B and K82-3B. As soon as the tray reaches the bottommost position, LS9 will be actuated and power will be provided to the in-winding of B2.

If the tray is already in, LS20 will be actuated and power will be provided to K82 to K59-4A, K55-2B and K56-3. K82 will latch through K82-2 and K82-4B will open removing power from B8. K82-4A will close and the tray will be driven upwardly.

If the tray is not in when LS9 is actuated, either LS21 is actuated or neither LS20 nor LS21 is actuated. In either case, K82 is not energized and the tray is therefore driven in. When LS20 actuates, K82 becomes energized and it is driven up as previously explained. Stoppage of the trays occurs through the pivoting of the sensor bar and the opening of LS6 and LS10 as described above.

A low paper signal originates automatically via the actuation of up limit switch LS8 or manually by actuation of down switch S6A. In either case, K55 is energized and latched through K55-4. This causes K55-2B to open the holding circuit to K82 and K56. K82 had been held in through K82-2, K56-3, K55-2B and K59-4A. K82-4B closes and the tray is driven downwardly until it actuates LS9. When LS9 is actuated, power is applied to B2 via K56-1B and the upper tray is then driven outwardly. K56 is not energized at this time. When LS21 is actuated, then K82 becomes energized. It is not driven upwardly, however, because K55-1 is open so power to the up-winding is interrupted. When the tray has been loaded and the up switch LS6B depressed, K55 drops out. The dropping out of K55 causes K55-3A to open dropping out K82. K82-3B then closes and combines with 55-2B and K59-4A to energize K56. K56-1A delivers power to the in-winding of B8 thus driving the tray in. When the tray reaches its in position then LS20 is actuated. K82 is then energized through K56-3, K55-2B and K59-4A. K58-4A then closes and the tray is driven upwardly.

If the operational mode is then changed by depressing the B button so as to forward sheets from the lower tray, K59 drops out, K59-4A opens and K59-4B closes dropping out K82 and K56, because their hold path through K59-4A is opened. K82-4B then closes driving the tray down. When LS9 is actuated, the tray is driven out because power is provided to the out-winding through K56-1B. When the out position is reached, LS21 is actuated and K82 is energized through K56-4, K55-3B and K59-4B. K82-4A then closes to permit the tray to be driven upwardly.

To feed sheets from the second mode, that is, from the lower tray, K59 must be deenergized. When the machine is initially turned on, K82 will be deenergized and the tray will be driven downwardly. When it reaches the bottommost position, and actuates LS9, power will be provided to the out-winding of B2 and the tray will be driven outwardly. When LS21 is actuated, K82 will pull in through K59-4B, K55-3B and K56-4. K82-4A will then close and the tray will be driven upwardly. If, when the machine is turned on, the tray is already out, the tray will still be driven down but will experience no horizontal movement. When the tray reaches the bottommost position and LS21 is actuated, K82 will be energized and the tray will be immediately driven upwardly.

When a low paper condition is experienced, K55 becomes energized through the closing of LS8 and K55-3B opens the holding path to K82. K82 drops out and the tray is driven downwardly. K56 becomes energized through K59-4B, K55-2A and K82-3B. When down limit switch LS9 is actuated, power is applied to the in-winding B2 via K56-1A and the tray is driven in. When LS20 is actuated, K82 becomes energized but the tray is not driven up because K55-1 is open.

When the "UP" button of the machine is depressed, K55-2A opens and both K56 and K82 drop out. The tray is therefore driven in until LS21 is actuated. Power for this is provided to B2 via K56-1B. LS21 then energizes K82 and the tray is driven upwardly.

When switching from the lower tray to the upper tray mode, K59 is energized by depressing the A button. K59-4B then opens, dropping out K82. K82-3B closes and K56 is energized through K55-2B and K59-4A. K82-4B then closes driving the trays down until LS9 is actuated. LS9 causes the tray to be driven in until LS20 is actuated which causes K82 to be energized via K56-3, K55-2B and K59-4A. K82-4B then opens and K82-4A closes and the tray is driven upwardly to permit the feeding of sheets from the upper tray.

As can be understood from the foregoing description, the sheet support trays are operable in cooperation with the sheet-forwarding and low-sheet-sensing elements as described in the aforementioned Draugelis application. Beyond this, the trays are automatically movable through the depression of a single button to position either the sheet material on the upper or lower tray to be located for the forwarding of single sheets therefrom by sheet-forwarding elements.

While the instant invention has been described as being carried out in a specific embodiment hereof, it is not intended to be limited thereby but it is intended to be protected broadly within the scope of the appended claims.

What we claim is:

1. An assembly for forwarding sheet material from one of a plurality of stacks of sheet material including
   - an upper sheet-supporting surface for retaining a first stack of sheet material in a substantially horizontal disposition,
   - a lower sheet-supporting surface for retaining a second stack of sheet material in a substantially horizontal disposition,
   - means operatively securing said first and second sheet-supporting surfaces vertically spaced from each other,
   - sheet-forwarding means for sequentially feeding sheets from one of said surfaces,
   - first reversible motor means to raise and lower said sheet-supporting surfaces toward and away from a location whereat the topmost sheet of one of said stacks is in operative association with said sheet-forwarding means,
   - second reversible motor means to horizontally displace said upper sheet-supporting surface so that said lower sheet-supporting surface may be vertically displaced into association with said sheet-forwarding means and
   - selectively operable control means to actuate said first and second reversible motor means between a first position whereat said upper sheet-supporting surface is operatively located for having sheets fed therefrom with the lower sheet-supporting surface located therebeneath and a second position whereat said lower sheet-supporting surface is operatively located for having sheets fed therefrom with the upper sheet-supporting surface horizontally displaced therefrom.

2. An assembly as set forth in claim 1 wherein said upper sheet-supporting surface is slidably mounted with respect to said lower sheet-supporting surface and further including control means to displace said upper sheet-supporting surface away from said sheet-forwarding means prior to the raising of said lower sheet-supporting surface to said sheet-forwarding means.

3. An assembly as set forth in claim 2 and further including a common sensor means to determine the presence of either stack of sheet material being raised toward said sheet-forwarding means and to stop the sensed stack when the topmost sheet thereof is in operative association with said sheet-forwarding means.

4. Apparatus for positioning an endmost sheet on one of a plurality of stacks of sheet material in operative association with sheet-forwarding means including
   - a first tray for supporting a first stack of sheet material,
   - a second tray for supporting a second stack of sheet material,
   - reversible means to simultaneously move said first and second trays concurrently in a first plane toward and away from sheet-forwarding means,
   - means to displace one of said trays relative to the other in a second plane and
   - control means operably coupling said two last-mentioned means to position one of said trays in operative proximity to the sheet-forwarding means.

5. The apparatus as set forth in claim 4 wherein said control means includes circuit means capable of concurrently moving

said first and second trays away from the sheet-forwarding means, one of the trays relative to the other and then concurrently moving said first and second trays toward the sheet-forwarding means to thereby change the tray which is in operative proximity with the sheet-forwarding means.

6. Apparatus for supporting a plurality of stacks of sheet material in association with sheet-forwarding means such that sheet material from one of the stacks is in the operative proximity for being forwarded by the sheet-forwarding means including

a first surface for supporting a first stack of sheet material,

a second surface for supporting a second stack of sheet material,

means coupling said first and second support surfaces so as to constantly retain them vertically spaced from each other,

means to cause a concurrent vertical movement of said surfaces either toward or away from said sheet-forwarding means and

means to horizontally displace one of said surfaces between a first position whereat sheet material may be fed therefrom and a second position whereat sheet material may be fed from the other of said surface.

7. The apparatus as set forth in claim 6 and further including control means vertically moving said surfaces, horizontally displacing one of said surfaces with respect to the other and then vertically moving said surfaces in an opposite direction to thereby change the stack from which sheet material may be fed.

8. The apparatus as set forth in claim 6 and further including a common sensor means to determine the presence of one of the stacks of sheet material being vertically moved to stop the sensed stack at a predetermined position.